DODGE®

BEARING ENGINEERING CATALOG

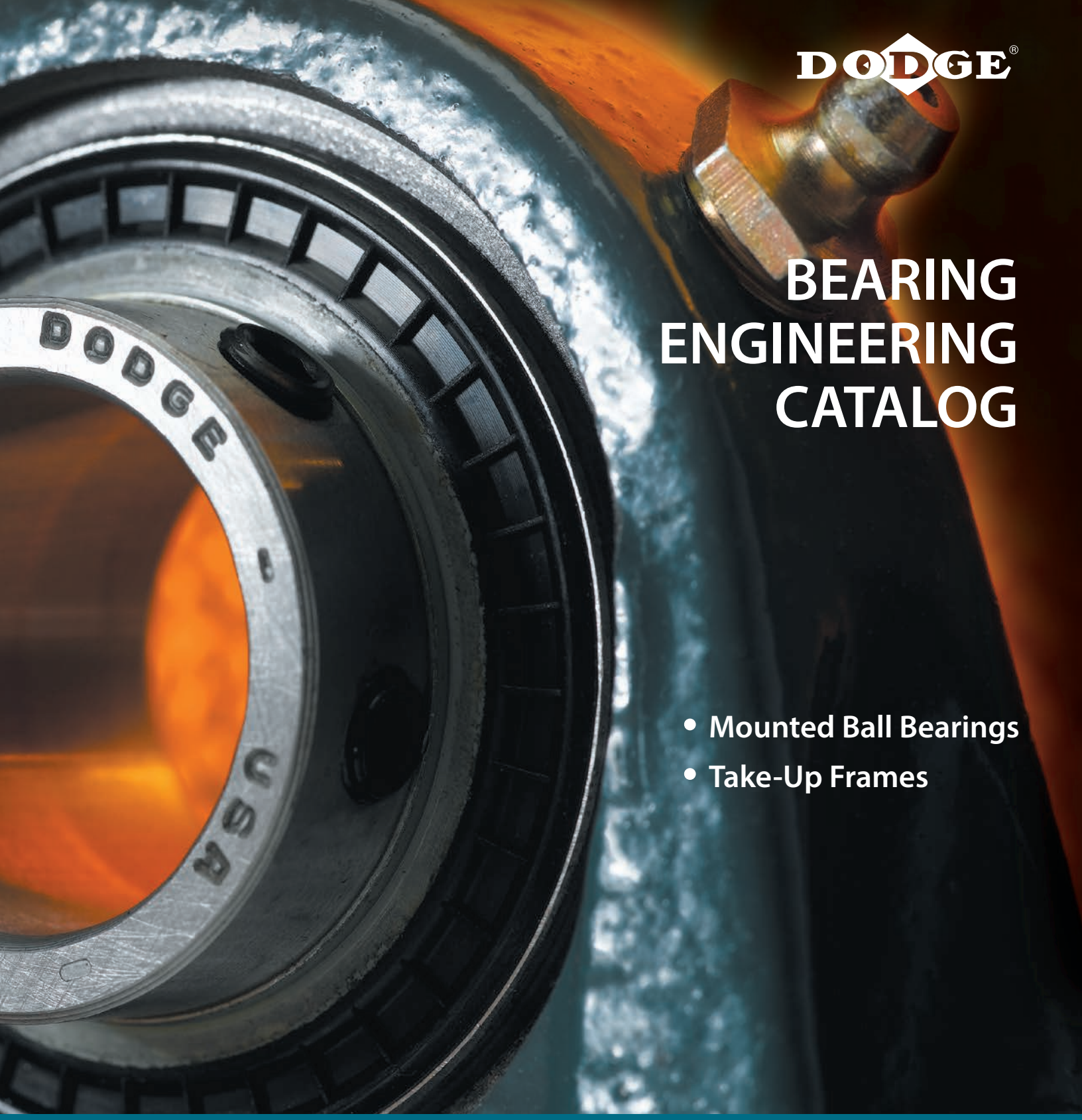

- Mounted Ball Bearings
- Take-Up Frames

BALDOR®

A MEMBER OF THE ABB GROUP

To receive a copy of the Dodge® Bearing Engineering Catalog, Dodge Gearing Engineering Catalog, Dodge Power Transmission Components Engineering Catalog, or Dodge Product Manuals, contact your local authorized Dodge Distributor or www.baldor.com.

MEMBER OF...

AMERICAN GEAR MANUFACTURERS ASSOCIATION

MECHANICAL POWER TRANSMISSION ASSOCIATION

AMERICAN BEARING MANUFACTURERS ASSOCIATION

PARTICIPATING MEMBER
BEARING SPECIALISTS ASSOCIATION

POWER TRANSMISSION DISTRIBUTORS ASSOCIATION

CONVEYOR MANUFACTURERS ASSOCIATION

HYDRAULIC INSTITUTE

Dodge Products are Manufactured in ISO 9002 Certified Plants

Prices and data indicated in this document are for your convenience and were correct at time of printing with the exception of clerical and/or printing errors. Possession of this document by any person or company is not to be construed as an offer to sell to him or to anyone else the goods listed herein at the prices stated.

ALL DATA AND PRICES ARE SUBJECT TO CHANGE WITHOUT NOTICE and shall be subject to those prices in effect at time of shipments. All published and quoted prices are based upon the application of, and all sales are expressly subject to, the Company's Standard Terms and Conditions of Sales are available upon request. This document supersedes all previously published catalog/pricing documents.

WARNING

The information provided for Product Interchange in this catalog is for use only as a general reference by persons qualified to recognize unreasonable selection options. Products suggested as substitutes may have dimensional, rating, pricing and other differences from products to be replaced. This selection method must be used in conjunction with the applicable product catalog which contains important precautions and other pertinent information.

In illustrations throughout this catalog, safety guards have been removed for photographic purposes.

© 2012 Baldor Electric Company

WARNING: Because of the possible danger to person(s) or property from accidents which may result from the improper use of products, it is important that correct procedures be followed: Products must be used in accordance with the engineering information specified in the catalog. Proper installation, maintenance and operation procedures must be observed. The instructions in the instruction manuals must be followed. Inspections should be made as necessary to assure safe operation under prevailing conditions. Proper guards and other suitable safety devices or procedures as may be described or as may be specified in safety codes should be provided, and are neither provided by Baldor Electric Company nor are the responsibility of Baldor Electric. This unit and its associated equipment must be installed, adjusted and maintained by qualified personnel who are familiar with the construction and operation of all equipment in the system and the potential hazards involved. When risk to persons or property may be involved, a holding device must be an integral part of the driven equipment beyond the speed reducer output shaft.

For Additional information and Dodge® Product Manuals on Dodge Bearing Products, Dodge Gearing Products or Dodge PT Components:

> contact your local authorized Dodge Distributor

> contact us at **864.297.4800**

> visit us on the web at www.baldor.com



Baldor Electric Company
P.O. Box 2400, Fort Smith, AR 72902-2400 U.S.A., Ph: (1) 479.646.4711, Fax (1) 479.648.5792, International Fax (1) 479.648.5895

Baldor - Dodge
6040 Ponders Court, Greenville, SC 29615-4617 U.S.A., Ph: (1) 864.297.4800, Fax: (1) 864.281.2433

www.baldor.com

© Baldor Electric Company
CA3000A

All Rights Reserved. Printed in USA.
4/13 CJK 15,000

CONTENTS

DODGE BEARING CATALOG

CA3000A VOL. A

REFERENCE GUIDE. . . . . REFERENCE GUIDE-1
ULTRA KLEEN B1-1
E-Z KLEEN B2-1
EXTREME DUTY. B3-1
SETSCREW - SC/SCM B4-1
GRIP TIGHT - GT/GTM B5-1
D-LOK - DL/DLM B6-1
ECCENTRIC COLLAR - SXR B7-1
SETSCREW VSC B8-1
ECCENTRIC COLLAR - SXV B9-1
TAKE-UP FRAMES B19-1
ENGINEERING B20-1
Part Number Index INDEX-1
Key Word Index INDEX-69

CA3000B VOL. B

REFERENCE GUIDE. . . . . REFERENCE GUIDE-1
E-FAMILY B10-1
SPECIALITY TAPERED. B11-1
S-2000 . . . . . B12-1
UNISPHERE B13-1
IMPERIAL B14-1
UNIFIED SAF B15-1
MONO BLOCKS AND PLUMMER BLOCKS B16-1
SLEEVE BEARINGS B17-1
SLEEVOIL. B18-1
TAKE-UP FRAMES B19-1
ENGINEERING B20-1
Part Number Index INDEX-1
Key Word Index INDEX-57

REFERENCE GUIDE

ULTRA KLEEN - SS Inserts Ball Bearings
Page B1-1



- 440C Stainless steel inserts
- Polymer and stainless housings
- 65° Setscrew
- 3/4" - 2" Bore
- 20-50mm Metric bore
- QuadGuard Seal
- Stainless Balls
- Maxlife Cage
- Snap-in style end covers available from stock
- Nomenclature: P2B-SCEZ-100-PSS
  - PSS = Polymer Housing, Stainless Insert
  - SHSS = Stainless Housing, Stainless insert

E-Z KLEEN Ball Bearings
Page B2-1



- Two types: polymer housed units and stainless steel housed units
- Two inserts: corrosion resistant (comparable to 440 stainless steel) and standard steel insert with flingers
- Three locking styles: 65° setscrew angle (SC), concentric clamp collar (GT), and thin wall adapter (GT)
- QuadGuard seal
- Snap-in style end covers available from stock
- Maxlife cage
- Optional—BEV modification for the beverage industry
- Interchangeable mounting dimensions with most competitive products
- Anti-rotation device prevents insert rotation associated with light or rotating loads/high-speed applications
- Plus or minus 2° static misalignment

Polymer-Housed Polymer Sleeve Bearings
Page B2-1



- Polymer housing contains additive that prevents bacterial and fungal growth
- All polymer and stainless steel construction
- Solid polymer housing has no cavities and no fillings
- Conforms to FDA /USDA specifications
- Polymer sleeve insert with stainless steel anti-rotation pin
- No lubrication required, self-lubricated polymer sleeve insert for maintenance-free operation
- Offered in a wide variety of housing configurations and all popular bore sizes
- Operates in temperatures from -40°F to 180°F
- 3/4 - 1-15/16 size

Extreme Duty / SCED SCMED Ball Bearings
Page B3-1



- Synthetic grease / Mobilith SHC 220 PM
- QuadGuard seal
- Maxlife cage
- Snap-in style end covers available from stock
- 65° Setscrew
- Other shaft attachment methods are available upon request
- Wide inner ring design
- Anti-Rotation Pin to prevent insert from spinning in housing
- Grade 10 balls
- Bore Range
  - SC-3/4" to 2-15/16 " 20mm to 75mm
  - SCM-1" to 3-1/2", 25mm to 85mm

REFERENCE GUIDE

Setscrew Ball Bearings
Page B4-1



- Two types: normal duty SC, medium duty SCM
- DualGuard seal - comprised of single lip seal and rubberized flinger - standard on all SC/SCM ball bearings. LL Lo Torque Labyrinth seals optional.
- Snap in end covers available from stock for most popular cast housings.
- Interchangeable mounting dimensions with most competitive products
- 65° setscrew angle for greater holding power and ease of installation in confined areas
- Anti-rotation device on SC and SCM bearings prevents insert rotation associated with light or rotating loads/ high-speed applications
- Expansion and non-expansion pillow blocks available for popular SC shaft sizes
- High-temperature option available to 400°F on SC and SCM
- Plus or minus 2° static misalignment

GRIP TIGHT Ball Bearings
Page B5-1



- Two types: normal duty GT and medium duty GTM
- DualGuard seal - comprised of single lip seal and rubberized flinger - standard on all GT/GTM ball bearings. LL Lo Torque Labyrinth seals optional
- Snap in end covers available from stock for most popular cast housings
- Interchangeable mounting dimensions with most competitive setscrew, eccentric clamp collar products
- Thin Wall Adapter mounting offers 360° full shaft contact and concentricity. No shaft marring or fretting corrosion like setscrew and eccentric collar products. Integral dismount feature easily removes the bearing from the shaft. Turned, ground, and polished shafting is not required.
- Anti-rotation device prevents insert rotation associated with heavy loads, vibration, unbalanced loads, and high-speed applications
- Expansion pillow blocks available for popular shaft sizes
- High-temperature option available to 400°F
- Plus or minus 2° static misalignment

D-LOK Ball Bearings
Page B6-1



- Two types: normal duty DL and medium duty DLM
- DualGuard seal - comprised of single lip seal and rubberized flinger - standard on all DL/DLM ball bearings. LL Lo Torque Labyrinth seals optional
- Snap in end covers available from stock for most popular cast housings
- Interchangeable mounting dimensions with most competitive products
- Concentric clamp collar locks the bearing to the shaft by tightening a single Allen wrench cap screw. The bearing will not mar the shaft like setscrew and eccentric collar bearings, providing concentricity between the bearing and shaft
- Anti-rotation device prevents insert rotation associated with light or rotating loads/high-speed applications
- Expansion and non-expansion pillow blocks available for popular shaft sizes
- High-temperature option available to 400°F
- Plus or minus 2° static misalignment

Eccentric Collar Ball Bearings
Page B7-1



- Two types: normal duty SXR and SLX
- DualGuard seal - comprised of single lip seal and rubberized flinger - standard on all SXR ball bearings. LL Lo Torque Labyrinth seals optional
- Snap in end covers available from stock for most popular cast housings
- Interchangeable mounting dimensions with most competitive products
- Eccentric collar locks the bearing to the shaft by a quarter turn of the collar in direction of shaft rotation. Collar is secured in place with setscrew
- Anti-rotation device on SXR prevents insert rotation associated with light or rotating loads/high-speed applications
- Expansion and non-expansion pillow blocks available for popular SXR shaft sizes
- High-temperature option available to 400°F on SXR
- Plus or minus 2° static misalignment

Setscrew VSC, SL Ball Bearings
Page B8-1



- Intermediate duty
- Wide inner ring
- 65° setscrew
- ProGuard lip seal
- Plus or minus 2° static misalignment

REFERENCE GUIDE

Eccentric SXV Collar, SLX Ball Bearings
Page B9-1



- Intermediate duty
- Wide inner ring
- ProGuard lip seal
- Eccentric locking collar
- Plus or minus 2° static misalignment

Air Handling Ball Bearings
Page B5-12, B4-16, B6-12



- Thin wall adapter: normal duty GTAH and medium duty GTMAH
- Setscrew: normal duty (SCAH) and medium duty (SCMAH)
  Concentric clamp collar: normal duty (DLAH) and medium duty (DLMAH)
- Single-lip contact seal (standard on SCAH and SCMAH), single-lip contact seal with flingers (optional on SCAH and SCMAH, standard on DLAH, DLMAH and GTAH, GTMAH), low-torque labyrinth seal (optional), end covers available from stock
- Interchangeable mounting dimensions with most competitive products
- Anti-rotation device prevents insert rotation associated with light or rotating loads/high-speed applications
- Plus or minus 2° static misalignment
- Expansion and non-expansion pillow blocks available for popular shaft sizes
- High-temperature option available to 400°F

Type E Tapered Roller Bearings (E-XTRA)
Page B10-3



- Tapered rolling elements
- Completely assembled, factory adjusted, and properly lubricated—shaft ready
- XTS triple lip seal
- Extra protection—E-TECT™ seal option
- Comparable mounting dimensions with ball bearings
- E-XTRA allows easy upgrade from ball bearings

Type EXL Tapered Roller Bearings
Page B10-4



- XTS Triple-Lip Seal
- Up to ± 4° of misalignment capability
- Totally Sealed Inner Unit
- High Strength Ductile Iron Housings
- Available in Expansion and Non-Expansion Housings

Double-Interlock Tapered Roller Bearings
Page B10-5



- Tapered roller bearing durability in a variety of styles
- XTS triple lip seal
- Extra protection E-TECT seal option
- Special clearances and greases available
- Self aligning
- Factory assembled, adjusted, and lubricated—shaft ready
- Sealed bearing

Type K Tapered Roller Bearings
Page B10-5



- Tapered roller bearing with reduced length through bore
- Single collar design saves space and installation time
- Allows bearing to be closer to the load for reduced shaft design
- Self aligning
- Factory assembled, adjusted, and lubricated—shaft ready
- Same housing as double-interlock
- XTS triple lip seal
- Extra protection - E-TECT™ Seal Option

TAF Tapered Roller Bearings
Page B10-6



- Tapered bearing is a cost-saving alternative to SAF spherical bearings
- Shaft ready—mounts six times faster than SAF
- Interchangeable with SAF style pillow blocks
- Self aligning, factory assembled, adjusted, and lubricated
- XTS triple lip seal
- E-TECT seal option available up to 5”
- Optional sensors for speed, vibration, and temperature
- Up to 5° static misalignment

Type C Specialty Tapered Bearings
Page B11-5

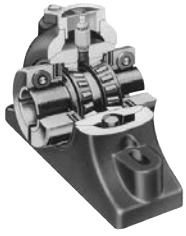

- Two single-row tapered bearings press-fitted on sleeve
- Improved concentricity over other collar-mounted types of bearings
- Steel multiple labyrinth seals
- Rugged two-piece outer housing
- Positive concentric clamp sleeve mounting
- Heavy duty gray iron

REFERENCE GUIDE

Special Duty Tapered Roller Bearings Page B11-3

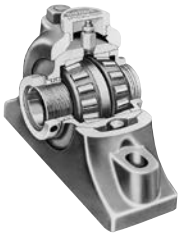

- Quality duplex tapered roller bearing
- Tapered adapter sleeve mounting
- Effective piston ring seals
- Rugged two-piece housing
- Heavy duty gray iron

S-2000 Spherical Roller Bearings Page B12-1



- High-capacity, double-row spherical rollers
- Permits static or dynamic misalignment up to +/- 1°
- Factory sealed, lubed, and adjusted
- Features springlok® collar that acts as a flinger
- Available with TRIDENT triple lip or labyrinth seal options
- 65° springlok collar mount for increased holding power vs. 90° or 120°
- Setscrew mounted
- S2000, S2000-E, and S2000-HD housing designs

UNISPHERE II Spherical Roller Bearings Page B13-1



- Dimensionally interchangeable with ball bearings in length through bore, base-to-center height, and footprint
- Approximately five times the rating of ball bearings
- Features same rolling elements and installation-ready components as S-2000
- Maintains sealing effectiveness with proven “R” seal
- Tapered seal area maintains seal contact during maximum misalignment
- Springlok collar mount with 65° setscrew spacing for optimum clamping force

Imperial IP Spherical Roller Bearings Page B14-1

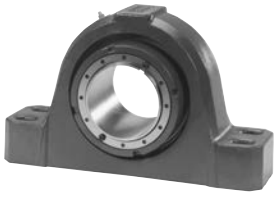

- Industry’s only push/pull adapter mount system
- Available in 2-bolt and 4-bolt pillow blocks, flanges, and take-ups
- Accepts commercial tolerance shafting
- Installation and removal in less than 15 minutes
- Full concentric shaft attachment with adaptor sleeve mount
- Virtually eliminates fretting corrosion
- Capable of withstanding static or dynamic misalignment of ± 1°
- Shaft-ready out of the box
- Available with TRIDENT triple lip or labyrinth seal options
- IP, IP-E, IP-HD and ISN housing design

ISAF Spherical Roller Bearings Page B14-10



- Dimensionally interchangeable with SAF style pillow blocks
- Patented Imperial™ adapter mounting system
- Installation and removal in less than 15 minutes
- Easy installation—no feeler gauges needed
- Available with TRIDENT triple lip or labyrinth seal options
- Full 2° misalignment capability
- Virtually eliminates fretting corrosion
- Shaft-ready out of the box, no assembly of components necessary

ISAF HYD Spherical Roller Bearings Page B14-10

- Patented integral hydraulic mounting and dismounting
- Built in taconite style seals in addition to conventional rubbing seals
- Four-bolt pillow blocks 5-7/16” through 15”
- 22232K through 23176K double row spherical bearings
- Ductile iron housings

ISNX metric dimensioned housing also available



REFERENCE GUIDE

ISN Spherical Roller Bearings
Page B14-1



- Patented ISN “Push/Pull” adapter mounting system
- Eliminates need for feeler gauges
- Easy removal
- Expansion & non-expansion, field convertible
- Triple lip contact seals for wet or dirty applications
- Labyrinth non-contact seals for high speed & high temperature applications

ISNX HYD Spherical Roller Bearings
Page B16-20

- Patented integral hydraulic mounting and dismounting
- Built-in taconite style seals in addition to conventional rubbing seals
- Four-bolt plummer blocks for 150mm through 360mm
- 22134K through 23176k double row spherical bearings
- Ductile iron housings



USAF Spherical Roller Bearings
Page B15-3

- 22200, 22300, 23000, 23100, and 23200 Series
- Industry-standard dimensions interchangeable with SAF housings
- Five sealing options to match most operating conditions
- Cast-in dimples locate drill holes for lube fitting, vents, sensors, and mounting modifications
- Standard housings have two oversized drains adaptable for circulating oil systems
- Pry slots allow easy separation of the pillow block



Split-Spher Spherical Roller Bearings
Page B15-5

- Split-race spherical bearing fits USAF 500 housings and replaces bearing and adapter assemblies
- Easy to replace without removing other shaft-mounted components
- Only split-race bearing made to standard SAF pillow block dimensions
- Has same OD dimensions as a standard spherical bearing
- Uses 22200 Series split roller bearings



SNX Spherical Roller Bearings
Page B16-25

- Dimensionally interchangeable plummer block with metric SN housing
- General-purpose, high-capacity, double-row, spherical roller bearings
- Adapter and direct mount
- Five different sealing options to match most operating conditions
- Grease or oil lubrication
- SNX30 from 110mm through 170mm



SDX (cast iron), SDXD (ductile iron) Spherical Roller Bearings
Page B16-46

- Metric dimensioned plummer block housing
- Accepts 23000K and 23100K bearings
- Sized from 150mm through 320mm
- Direct seal greasing standard

HFO Plummer Block Bearings
Page B16-54

- Plummer block housings with oil-conveying ring lubrication
- Used with 22200 and 22200K Series spherical roller bearings
- Available with labyrinth seals or end covers
- Material: gray cast iron



REFERENCE GUIDE

PDNF & BLO..A
Page B16-3



- Solid housings incorporate two bearing seats
- Misalignment is virtually eliminated
- PDNF Series is grease lubricated
- BLO..A Series is oil lubricated
- BLO..A Series is designed for heavy duty service

SOLIDLUBE Sleeve Bearings
Page B17-2

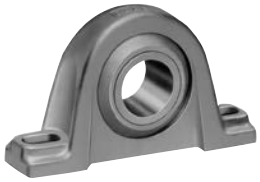

- Functions in harsh environments where ball bearing will not
- Self-lubricating, statically self aligning
- Covers a wide range of temperature extremes
  - 700 Series: -40°F to 700°F
  - 1000 Series: -200°F to -40°F and 250°F to 1000°F
- Housing types: 2-bolt pillow blocks, 4-bolt and 2-bolt flange units, and take-up units
- Ideal where bearings are subject to dry cycles or where lube systems would be too costly
- Recommended for slow speeds and limited shaft movement applications
- Bore sizes 3/4” to 8”

Babbitted & Bronze Bushed Sleeve Bearings
Page B17-3



- Good for slow to medium and shock loads
- Good for slow speeds and shock loads
- Capable of MPTA load ratings
- Cast-iron housings in 2- and 4-bolt pillow blocks
- Babbitted bearing features solid or fully split housing
- Bronze bushed bearing features fully split housing
- Bronze bushing is split and easily replaced

BRONZOIL Sleeve Bearings
Page B17-2



- Self Oiling Bushing Feeds Oil to Shaft
- Split Pressed Steel Housing
- Statically Self-Aligning
- Bushing Shoulder Provides Self-Lubricating Bearing Thrust Surface
- Slotted Bolt Holes
- Oil Resistant Rubber Grommets Available for Sound Isolation and Static Electricity Protection

SLEEVOIL R Series Hydrodynamic Pillow Block Bearings
Page B18-1



- Extended life (no metal-to-metal contact during operation)
- Handles high speeds
- Dampens vibration, provides quiet operation
- Fully split for ease of maintenance
- Self aligning
- Thrust capability
- External cooling (air, water, or oil) available for hot shafts

SLEEVOIL RTL Series Hydrodynamic Pillow Block Bearings
Page B18-1



- Extended life (no metal-to-metal contact during operation)
- Handles high speeds
- Dampens vibration, provides quiet operation
- Fully split for ease of maintenance
- Self aligning
- Three times the thrust load capability of R Series
- External cooling (air, water, or oil) available for hot shafts

SLEEVOIL Oil Level & Filtration System (OLF)
Page B18-30



- Maintains proper oil level while bearing is running
- Increases bearing performance and life
- Allows even oil distribution and cooler operating temperatures
- Ensures filtered clean oil
- Permits easy filter change while bearing is operating

Take-Up Frames
Page B19-1



- 6 take-up frame types available from stock
- Standard take-up frame travel from 1-1/2” to 60”
- Take-up frames allow for the mounting of Dodge ball, roller, and sleeve bearings
- Take-up frame capacity is pre-engineered to exceed bearing capacity
- Made to provide/maintain tension and shaft centers on a variety of belt and chain-type conveyors
- Hydraulic and pneumatic tensioning available

Smart Products
Page B10-67, B14-103, B15-54



- Online monitoring of temperature, vibration, and speed
- Plug and play installation
- Available on TAF, USAF, and ISAF

BALL BEARING INDEX

		HOUSING					
		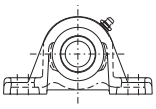 P2B-	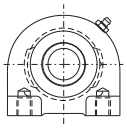 TB-	 F2B-	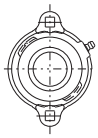 LFT-	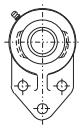 FB-	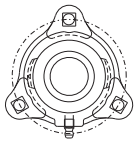 LF- / F3B-
INSERTS	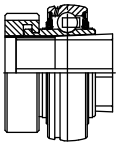 GT- / GTEZ- / GTM-	P2B-GT-B5-8 P2B-GTEZ -PCR-B2-44 -SHCR-B2-26 P2B-GTM-B5-20	TB-GT-B5-24 TB-GTEZ -PCR-B2-50	F2B-GT-B5-24 F2B-GTEZ -PCR-B2-54 -SHCR-B2-30 F2B-GTM-B5-30		FB-GT-B5-33 FB-GTEZ -PCR-B2-58	
	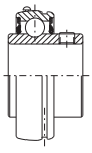 SC- / SCM- / SL-	P2B-SC-B4-12 P2B-SCRZ -PCR-B2-46 -SHCR-B2-26 P2B-SCM-B4-26 P2B-SL-B4-30	TB-SC-B4-32 TB-SCEZ-B2-29	F2B-SC-B4-34 F2B-SCEZ -PCR-B2-56 -SHCR-B2-31 F2B-SCM-B4-42 F2B-SL-B4-48	LFT-SC-B4-46 LFT-SCEZ-B2-33	FB-SC-B4-50 FB-SCRZ -PCR-B2-59 -SHCR-B2-34	LF-SC-B4-52 LF-SCEZ-B2-33 F3B-SL-B4-53
	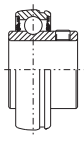 VSC-	P2B-VSC-B8-8		F2B-VSC-B8-14			
	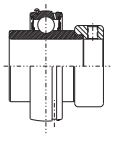 SXR-	P2B-SXR-B7-12	TB-SXR-B7-22	F2B-SXR-B7-24			
	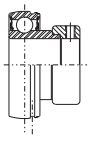 SXV-	P2B-SXV-B4-6	TB-SXV-B9-12	F2B-SXV-B9-16	LFT-SXV-B9-18		LF-SXV-B9-22
	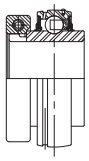 DL- / DLEZ- / DLM-	P2B-DL-B6-10 P2B-DLEZ -PCR-B2-48 -SHCR-B2-28 P2B-DLM-B6-18	TB-DL-B6-22 TB-DLEZ-PCR-B2-52	F2B-DL-B6-26 F2B-DLEZ -PCR-B2-57 -SHCR-B2-32 F2B-DLM-B6-30	LFT-DL-B6-31	FB-DL-B6-33 FB-DLEZ-B2-60	LF-DL-B6-32

Not Recommended

Made to Order / Modification Required

BALL BEARING INDEX

		HOUSING					
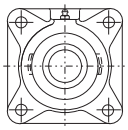 F4B-	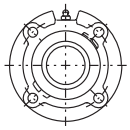 FC-	 NSTU- / WSTU- / TP-	 HNG-	 SCHB-	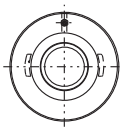 CYL-		
F4B-GT-B5-35 F4B-GTEZ -PCR-B2-62 -SHCR-B2-35 F4B-GTM-B5-42	FC-GT-B5-46 FC-GTM-B5-48	NSTU-GT/GTM -B5-50 & 52 WSTU-GT/GTM- B5-54&58 WSTU-GTEZ -PCR-B2-66 TP-GT/GTM-B5-60&61				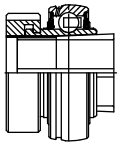 GT- / GTEZ- / GTM-	I N S E R T S
F4B-SC-B4-54 F4B-SCEZ -PCR-B2-64 -SHCR-B2-36 F4B-SCM-B4-60 F4B-SL-B4-64	FC-SC-B4-66 FC-SCM-B4-68	NSTU-SC-B4-70 NTSU-SCM-B4-73 TP-G-B4-82 NSTU-SCEZ-B2-38 WSTU-SCEZ -PCR-B2-68 WSTU-SCM-B4-78 WSTU-SC-B4-74	HNG-SC-B4-86	SCHB-SC-B4-84	CYL-SC-B4-87	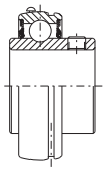 SC- / SCM- / SL-	
F4B-VSC-B8-16		WSTU-VSC-B8-20 NSTU-VSC-B8-18				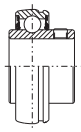 VSC-	
F4B-SXR-B7-28	FC-SXR-B7-30	WSTU-SXR-B7-34 NSTU-SXR-B7-32 TP-GXR-B7-36	HNG-SXR-B7-37	SCHB-SXR-B7-38	CYL-SXR-B7-39	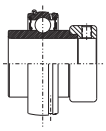 SXR-	
F4B-SXR-B9-24 F4B-SLX-B9-26	FC-SXV-B9-28	NSTU-SXV-B9-30 WSTU-SXV-B9-32				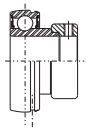 SXV-	
F4B-DL-B6-34 F4B-DLEZ -PCR-B2-65 -SHCR-B2-37 F4B-DLM-B6-36	FC-DL-B6-38 FC-DLM-B6-40	NSTU-DL-B6-42 NSTU-DLM-B6-44 WTSU-DLEZ -PCR-B2-70 WSTU-DL-B6-46 WSTU-DLM-B6-48 TP-DL-B6-50 TP-DLM-B6-51		SCHB-DL-B6-52	CYL-DL-B6-53	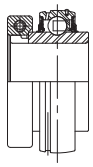 DL- / DLEZ- / DLM-	

Not Recommended

Made to Order / Modification Required

BALL BEARING INDEX

CONTENTS



ULTRA KLEEN Polymer and Stainless Steel Housed Mounted Bearings

Features / Benefits B1-3
How to Order / Nomenclature B1-6
Easy Selection B1-7
Dimensions
- Pillow Blocks B1-15
- Tapped Base Pillow Block B1-17
- 2-Bolt Flange Bearings B1-19
- 3-Bolt Flange Bearings B1-22
- Flanged Bracketed Bearings B1-23
- 4-Bolt Flange Bearings B1-26
- Wide Slot Take-Up Bearings B1-28
- Narrow Slot Take-Up Bearings B1-32
- Inserts B1-34

Accessories B1-35
Part Number Index INDEX-1
Key Word Index INDEX-69

CONTENTS



ULTRA KLEEN
Polymer and Stainless Steel Housed Mounted Bearings

Insert: The Dodge ULTRA KLEEN features inserts made of 100% stainless steel and includes set screws positioned at 65 degree angles to provide maximum locking force without compromising inner ring strength. The inserts each include a stainless anti-rotation pin to prevent insert rotation in the housing under load which may cause premature bearing failure. Stainless inserts eliminate the possibility of contamination due to chipping and flaking, commonly found in inserts which are coated with zinc or thin-dense chrome.

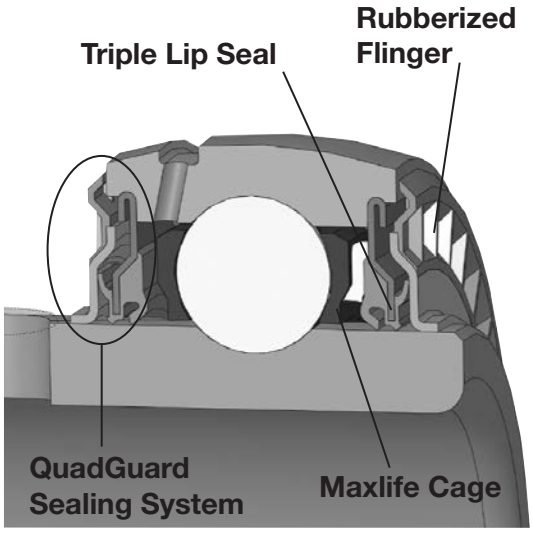

Sealing: Retaining lubrication and preventing contamination from entering the bearing is critical in harsh environments. That is why Dodge has developed the premium QuadGuard® sealing system for maximum sealing effectiveness under these conditions. The seal includes two patented features unique to Dodge bearings; these features are standard on the ULTRA KLEEN product. The first is a triple-lip seal designed to maximize sealing and produce less drag than other multi-lip seals. The Dodge patented triple-lip design uses a mechanically retained seal with two contact points on the inner ring and one contact point riding against the flinger surface. Three points of contact maximize the ability of the seal to guard against contamination and to retain lubricants. The QuadGuard seal incorporates the industry's first (and only) patented rubberized flinger. This flinger uses molded rubber to provide additional protection from contaminants entering the bearing. The baffle design of the rubber on the external surface of the flinger enhances the removal of liquid as the flinger rotates. Grease chambers on the internal surface prevent lubricants from exiting the bearing during operation while allowing purging during re-lubrication. This superior design will increase service life in dirty environments thus leading to extended up-time for our customers. When used in conjunction with one another, the triple-lip seal and rubberized flinger create a sealing system that is ideal for demanding environments.



Retainer: The Maxlife® Cage is the product of extensive research and development in retainer technology and industry leading engineering. The cage features a two-piece design that creates a grease compartment around each of the rolling elements. These compartments allow balls to be constantly in contact with grease, so a good oil film will always exist to prevent wear and minimize friction and heat. The Maxlife cage reduces the relative motion between bearing components and grease which results in lower operating temperatures and extended life. The compartmental construction of the cage tends to hold in the grease and prevent it from being washed out in extremely wet or dirty conditions. This feature allows the bearing to be re-lubricated with less frequency than standard designs require, while extending bearing life.

Lubrication: 100% filled with H1, food grade grease

Note: Instruction manuals and drawings for Dodge bearings are available on **www.dodge-pt.com**

FEATURES/BENEFITS

ULTRA KLEEN
Polymer and Stainless Steel Housed Mounted Bearings

Housings: The ULTRA KLEEN is available in a wide variety of both polymer and stainless housing designs.

- Polymer
  - — 204 to 210 Series (3/4" bore to 2", 20mm to 50mm)
    - Pillow Block
    - Two-Bolt Flange
    - Four-Bolt Flange
  - — 204 to 207 Series (3/4" bore to 1-7/16", 20mm to 50mm)
    - Tapped Base
    - Flange Bracket
    - Wide Slot Take-Up
  - — Solid cross-section base housings
  - — No core cavities to trap contaminants
  - — Anti-Microbial agent retards bacterial and fungal growth
  - — All stainless hardware and fittings
  - — Housing strength exceeds bearing static capacity
  - — End covers available



- Stainless
  - — 204 to 208, 210 Series
    - Pillow Block
    - Two-Bolt Flange
    - Four-Bolt Flange
    - Narrow Slot Take-Up ┐ (204 - 207 only)
    - Wide Slot Take-Up ┘
    - Tapped Base
    - Flange Bracket (no 208, 209)
  - — 204-207 Series
    - Light Duty Two-Bolt Flange, LFT
    - Light Duty Three-bolt Flange, LF
  - — 300 Series stainless steel casting
  - — End covers available

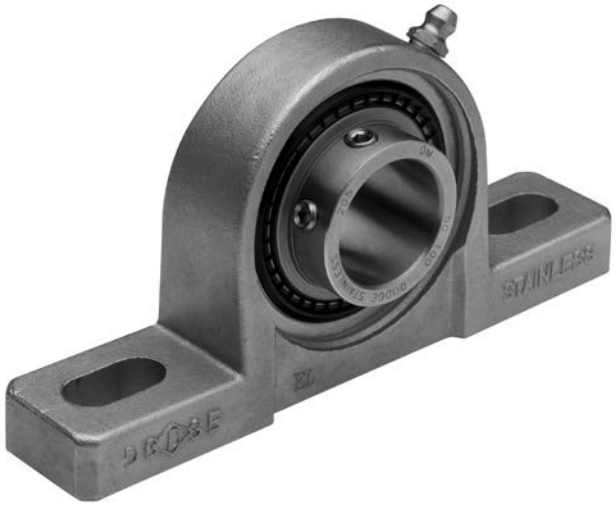

End Covers

All Dodge E-Z KLEEN and ULTRA KLEEN bearings include a housing groove to accept a snap-on polymer end cover. These durable covers are easy to install and each is provided with a drain hole to prevent moisture from collecting inside the cover. The snap-on style of end cover incorporates an additional lip on the mounting surface for a rigid fit within the housing. This tight fit creates a better seal prevents movement of the cover during operation and high-pressure cleaning. Dodge snap-on end covers provide positive sealing in wet environments and create safer working conditions by enclosing rotating shafts.

Note: Instruction manuals and drawings for Dodge bearings are available on **www.dodge-pt.com**

FEATURES/BENEFITS



ULTRA KLEEN-SC

ULTRA KLEEN-SC	End-Cover Capability		Sealing		Retainer
	End-Cover Groove	Snap-On End Cover	Triple-Lip Seal	Stainless Rubberized Flinger	Maxlife Cage
Standard Features	X	X	X	X	X

Housing Capability Stainless							
Housing Style	**204**	**205**	**206**	**207**	**208**	**209**	**210**
P2B	X	X	X	X	X		X
F2B	X	X	X	X	X		X
F4B	X	X	X	X	X		X
FB	X	X	X	X			X
TB	X	X	X	X	X		X
NSTU	X	X	X	X	X		X
WSTU	X	X	X	X	X		X
LF	X	X	X	X			
LFT	X	X	X	X			

Housing Capability Polymer							
Housing Style	**204**	**205**	**206**	**207**	**208**	**209**	**210**
P2B	X	X	X	X	X	X	X
F2B	X	X	X	X	X	X	X
F4B	X	X	X	X	X	X	X
FB	X	X	X	X			
TB	X	X	X	X			
NSTU							
WSTU	X	X	X	X			
LF							
LFT							

Note: Instruction manuals and drawings for Dodge bearings are available on **www.dodge-pt.com**

HOW TO ORDER NOMENCLATURE



ULTRA KLEEN Polymer and Stainless Steel Housed Mounted Bearings

HOW TO ORDER

There are two ways to specify DODGE ULTRA KLEEN ball bearings. Most of the product offerings have part numbers with listings shown throughout this brochure. Use of part numbers ensures accurate order processing.

When part numbers are not shown, the product may be specified by description or part name. This method is used when ordering units that include modifications or options. To order by description for options not covered by the nomenclature.

NOMENCLATURE

P2B - SCHUEZ - 104S = PSS

- **PSS** — Modification Or Feature:
  - SS = Stainless Steel Insert
  - MOD = Modified
  - P = Polymer housing
  - SH = Stainless Steel Housing
- **104S** — Shaft Size
  - Inches:
    - First digit = Number of inches
    - Second & third digits = Number of sixteenths of an inch
      - 104 = Indicates 1-4/16 or 1-1/4
    - S = Next smaller ring size. E.g. 1-1/4 206 would be written as 104S
    - L = Next larger ring size. E.g. 1/2 204 would be written as 008L
  - Metric:
    - First two digits = number of millimeters
    - M = Metric
- **SCHUEZ** — Bearing Type:
  - SC = Wide inner ring, normal duty, 65° setscrew locking
  - Suffixes to the above:
    - EZ = E-Z KLEEN/ULTRA KLEEN (used with polymer or stainless steel housed units)
    - BEZ = Low backing height pillow block, E-Z KLEEN/ULTRA KLEEN
    - UEZ = higher back pillow block, E-Z KLEEN/ULTRA KLEEN (for interchangeability with competitive pillow blocks)
- **P2B** — Housing:
  - F2B = 2 bolt flange
  - F4B = 4 bolt flange
  - FB = Flanged bracket
  - INS = Insert
  - P2B = Pillow block, 2 bolt base
  - TB = Tapped base pillow block
  - WSTU = Wide slot take-up
  - NSTU = Narrow slot take-up
  - LF = 3 bolt, light duty flange
  - LFT = 2 bolt, light duty flange



Selection of DODGE ULTRA KLEEN Polymer and Stainless Steel Housed Ball Bearings

DODGE ULTRA KLEEN mounted ball bearings are primarily designed for radial loading. However, they have the capacity to carry thrust loads and combined radial/thrust loads. The maximum recommended load which can be applied is limited by various components in the system, such as bearing, housing, shaft attachments, speed and life requirements as listed in this catalog and the instruction manual that accompanies each bearing. DODGE ULTRA KLEEN ball bearings have been applied successfully when these limits have been exceeded under controlled operating conditions. Contact DODGE Engineering for applications which exceed these recommendations.

Select a bearing from the Selection Table that has a radial load rating at the operating speed equal to or greater than the calculated Equivalent Radial Load for a desired L_{10} life. This simple method is all that is required for the majority of general applications and provides for occasional average shock loads.

L_{10} Hours Life-the life which may be expected for at least 90% of a given group of bearings operating under identical conditions.

Heavy Service-For heavy shock loads, frequent shock loads or severe vibrations, add up to 50% (according to severity of conditions) to the Equivalent Radial Load to obtain a Modified Equivalent Radial Load. Consult Application Engineering for additional selection assistance.

A maximum thrust load value of C/10 is recommended as a guide for general applications and will give adequate L_{10} life. If the thrust load exceeds this limit, it is advisable to use auxiliary thrust carrying devices, such as a shaft shoulder, snap ring, or a thrust collar. Where substantial radial load pulls the housing away from the mounting base, both the hold-down bolts and housing must be of adequate strength. Auxiliary load carrying devices, such as shear bars, are advisable for side or end-loading of pillow blocks and radial loads for flange units.

To determine the L_{10} hours life for loads and RPMs not listed use the following equation:

$$L_{10} = \left(\frac{C}{P}\right)^3 \times \left(\frac{16{,}667}{n}\right)$$

Where:
L_{10}= Life, hours
C = Dynamic Capacity, lbs. or N
P = Equivalent Radial Load, lbs. or N
n = Revolutions per minute

When the load on a ball bearing is solely a radial load with no thrust (axial) load, the Equivalent Radial Load (P) is equal to the actual radial load. However, when a thrust (axial) load is applied, the radial and thrust loads applied must be converted into an Equivalent Radial Load. Use X (radial factor) and Y (thrust factor) from Table 1 to convert the actual applied thrust and radial loads to an Equivalent Radial Load which has the same effect on the life of a bearing as a radial load of this magnitude.

Shaft Tolerances

Normal Shaft Size (Inches)	Recommended Shaft Tolerances SC (Inches)
Up to 1-1/2”	+0.000 -.0005
Over 1-1/2 to 2”	+0.000 -.0010

$$P = XF_R + YF_A$$

Where:
P = Equivalent Radial Load, lbs.
F_R= Radial load, lbs.
F_A= Thrust load, lbs.
e = Thrust load to radial load factor (Table 1)
X = Radial load factor (Table 1)
Y = Thrust Factor (Table 1)
C_0= Basic static capacity (Selection Table)

To find X and Y, first calculate F_A/C_0 to determine e. Calculate F_A/F_R and compare to e to determine the X and Y factors to use from Table 1.

Substitute all known values into the Equivalent Radial Load equation. The Equivalent Radial Load (P) thus determined can be used in the L10 life formula or compared to the allowable Equivalent Radial Load rating desired in the expanded rating chart to select a bearing (Selection Table).

NOTE: Bearing analysis program “BEST” is available on www.ptwizard.com

EASY SELECTION



Selection of DODGE ULTRA KLEEN Polymer and Stainless Steel Housed Ball Bearings

If calculated value of P is less than F_R, use $P=F_R$.

Table 1

F_A/C_o	e	Radial/Thrust Factors			
		If F_A/F_R is equal to or less than e		If F_A/F_R is greater than e	
		$F_A/F_R \leq e$		$F_A/F_R > e$	
		X	Y	X	Y
0.014	0.19	1	0	0.56	2.30
0.021	0.21	1	0	0.56	2.15
0.028	0.22	1	0	0.56	1.99
0.042	0.24	1	0	0.56	1.85
0.056	0.26	1	0	0.56	1.71
0.070	0.27	1	0	0.56	1.63
0.084	0.28	1	0	0.56	1.55
0.110	0.30	1	0	0.56	1.45
0.170	0.34	1	0	0.56	1.31
0.280	0.38	1	0	0.56	1.15
0.420	0.42	1	0	0.56	1.04
0.560	0.44	1	0	0.56	1.00

Lubrication- DODGE Ball Bearings are lubricated at the factory and are ready to run. The bearings are initially lubricated with an aluminum complex based, H1 Food Grade grease and should be relubricated with the same or some equivalent. For high speeds, high loads, extreme temperatures and other abnormal operating conditions, special greases may be required. Contact DODGE Application Engineering for recommendations on these types of applications.

Misalignment - DODGE Ball Bearings are designed to allow a maximum of ±2° static misalignment. These bearings are not suitable for dynamic misalignment. To ensure good alignment, mounting surfaces must be checked for flatness and must lie in the same plane. When tightening base bolts, each bolt should be alternately tightening in incremental torque values until full torque is achieved to prevent the angular shifting of the pillow block that occurs when one bolt is tightened to its full torque. Shimming may be required to minimize misalignment.

NOTE: Bearing analysis program "BEST" is available on www.ptwizard.com



Selection of DODGE ULTRA KLEEN Polymer and Stainless Steel Housed Ball Bearings

Recommended Torque													
Setscrews					D-LOK			Mounting Bolts					
Setscrew Size	Key Hex Across Flats	Recommended Torque			Cap Screw Size	Recom. Torque	EZ-KLEEN Recom. Torque	Metal Housings		EZ-KLEEN Housed Bearings			
		Standard Ball Bearing Insert		Corrosion Resistant Stainless Steel				Bolt Size	Recom. Dry Torque (Grade 2)	2-Bolt PB, 2 & 4 Bolt Fig. and Flg. Brackets		Tapped Base PB	
		Min	Max							Bolt Size	Torque ①	Bolt Size	Torque ②
(in.)	(in.)	(in-lbs.)	(in.-lbs.)	(in.-lbs.)	(in.)	(in.-lbs.)	(in.-lbs.)	(in.)	(in.-lbs.)	(in.)	(in.-lbs.)	(in.)	(in.-lbs.)
#10	3/32	28	33	25	#8-32	58	46	3/8-16	240	3/8-16	225	3/8-16	175
1/4	1/8	66	80	60	#10-32	90	72	7/16-14	384	7/16-14	350	7/16-14	350
5/16	5/32	126	156	117	1/4-28	180	144	1/2-13	600	1/2-13	500	1/2-13	400
3/8	3/16	228	275	206	5/16-24	400	320	5/8-11	1200	9/16-12	650		
7/16	7/32	342	428	321	3/8-24	750	600	3/4-10	1950	5/8-11	1000		
								7/8-9	2890				
(mm)	(mm)	(N-m)	(N-m)	(N-m)	(mm)	(N-m)	(N-m)	(mm)	(N-m)	(mm)	(N-m)	①Torque for Austenitic (18-8) Stainless ②Max. torque values published. Do not exceed	
M5	2.5	3.2	3.7	2.8	M4	585	4.68	M10	29	M8	15		
M6	3	6.2	7.7	5.8	M5	10.75	8.6	M12	50	M10	25		
M8	4	14.2	17.8	13.4	M6	20.5	16.4	M16	124	M12	50		
M10	5	26	31	23	M8	45	36	M20	238	M14	75		
M12	6	46	57	43				M22	322	M18	125		

Lubrication

High Speed Operation - In the higher speed ranges, too much grease will cause over-heating. The amount of grease that the bearing will take for a particular high speed application can only be determined by experience. If excess grease in the bearing causes overheating, it will be necessary to remove grease fitting to permit excess grease to escape. The bearing has been greased at the factory and is ready to run. When establishing a relubrication schedule, note that a small amount of grease at frequent intervals is preferable to a large amount at infrequent intervals.

Lubrication Guide

Use a No. 2 Lithium complex base grease or equivalent*

Hours Run per Day	Suggested Lubrication Period in Weeks							
	1 to 250 RPM	251 to 500 RPM	501 to 750 RPM	751 to 1000 RPM	1001 to 1500 RPM	1501 to 2000 RPM	2001 to 2500 RPM	2501 to 3000 RPM
8	12	12	10	7	5	4	3	2
16	12	7	5	4	2	2	1	1
24	10	5	3	2	1	1	1	1

* For EZ-KLEEN series bearings, use an aluminum complex base grease.

Lubrication recommendations are intended for standard products applied in general operating conditions. For modified products, high temperature applications, and other anomalous applications contact product engineering at 864-284-5700.

NOTE: Bearing analysis program “BEST” is available on www.ptwizard.com

EASY SELECTION



Table 2: Easy Selection for Polymer and Stainless Housed ULTRA KLEEN Mounted Ball Bearings - Inch and Metric

Ring Size	Shaft Size SC	Dynamic Capacity C, lbs.	Static Capacity C_0, lbs.	L_{10} Life - Hours	Allowable Equivalent Radial Load Rating (lbs.) at Various RPM*											
					50	150	250	500	750	1000	1250	1500	1600	1750	2000	2250
204	1/2	2464	1482	20000	629	436	368	292	255	232	215	203	198	192	184	177
	5/8			30000	550	381	322	255	223	203	188	177	173	168	161	155
	3/4			40000	500	346	292	232	203	184	171	161	157	153	146	140
	13/16			60000	436	303	255	203	177	161	149	140	137	133	128	123
	20mm			100000	368	255	215	171	149	136	126	118	116	113	108	103
205	7/8	2674	1769	20000	683	474	399	317	277	252	234	220	215	209	200	192
	15/16			30000	597	414	349	277	242	220	204	192	188	182	174	168
	1			40000	542	376	317	252	220	200	185	174	171	166	159	152
	25mm			60000	474	328	277	220	192	174	162	152	149	145	138	133
				100000	399	277	234	185	162	147	137	129	126	122	117	112
206	1-1/16	3713	2538	20000	948	658	555	440	385	349	324	305	299	290	277	267
	1-1/8			30000	829	574	485	385	336	305	283	267	261	253	242	233
	1-3/16			40000	753	522	440	349	305	277	257	242	237	230	220	212
	1-1/4			60000	658	456	385	305	267	242	225	212	207	201	192	185
	30mm			100000	555	385	324	257	225	204	190	179	175	170	162	156
207	1-1/4	4895	3461	20000	1250	867	731	580	507	461	428	402	394	382	366	352
	1-5/16			30000	1092	757	639	507	443	402	374	352	344	334	319	307
	1-3/8			40000	992	688	580	461	402	366	339	319	313	303	290	279
	1-7/16			60000	867	601	507	402	352	319	296	279	273	265	254	244
	35mm			100000	731	507	428	339	296	269	250	235	230	224	214	206
208	1-1/2	6232	4475	20000	1592	1104	931	739	645	586	544	512	501	487	465	448
	1-5/8			30000	1391	964	813	645	564	512	476	448	438	425	407	391
	40mm			40000	1263	876	739	586	512	465	432	407	398	386	369	355
				60000	1104	765	645	512	448	407	377	355	348	337	323	310
				100000	931	645	544	432	377	343	318	300	293	285	272	262
209	1-5/8	6707	4906	20000	1713	1188	1002	795	695	631	586	551	540	524	501	482
	1-11/16			30000	1497	1038	875	695	607	551	512	482	471	458	438	421
	1-3/4			40000	1360	943	795	631	551	501	465	438	428	416	398	382
	45mm			60000	1188	824	695	551	482	438	406	382	374	363	347	334
				100000	1002	695	586	465	406	369	343	322	316	306	293	282
210	1-15/16	6707	5213	20000	1713	1188	1002	795	695	631	586	551	540	524	501	482
	2			30000	1497	1038	875	695	607	551	512	482	471	458	438	421
	50mm			40000	1360	943	795	631	551	501	465	438	428	416	398	382
				60000	1188	824	695	551	482	438	406	382	374	363	347	334
				100000	1002	695	586	465	406	369	343	322	316	306	293	282

* Slight interference fit required when operating on the right of the heavy line or in the shaded area.
▲ Piloted flange only

NOTE: Bearing analysis program "BEST" is available on www.ptwizard.com



Table 2: Easy Selection for Polymer and Stainless Housed ULTRA KLEEN Mounted Ball Bearings - Inch and Metric

Ring Size	Shaft Size SC	Dynamic Capacity C, lbs.	Static Capacity C_0, lbs.	L_{10} Life - Hours	Allowable Equivalent Radial Load Rating (lbs.) at Various RPM*											
					2500	2750	3000	3250	3500	3600	4000	4500	5000	5250	5500	6000
204	1/2	2464	1482	20000	171	166	161	157	153	151	146	140	136	133	131	128
	5/8			30000	149	145	140	137	133	132	128	123	118	117	115	111
	3/4			40000	136	131	128	124	121	120	116	111	108	106	104	101
	13/16			60000	118	115	111	109	106	105	101	97	94	93	91	88
	20mm			100000	100	97	94	92	89	88	85	82	79	78	77	75
205	7/8	2674	1769	20000	185	180	174	170	166	164	159	152	147	145	143	138
	15/16			30000	162	157	152	148	145	143	138	133	129	126	125	121
	1			40000	147	143	138	135	132	130	126	121	117	115	113	110
	25mm			60000	129	125	121	118	115	114	110	106	102	100	99	96
				100000	108	105	102	99	97	96	93	89	86	85	83	81
206	1-1/16	3713	2538	20000	257	249	242	236	230	228	220	212	204	201		
	1-1/8			30000	225	218	212	206	201	199	192	185	179	176		
	1-3/16			40000	204	198	192	187	183	181	175	168	162	160		
	1-1/4			60000	179	173	168	164	160	158	153	147	142	139		
	30mm			100000	151	146	142	138	135	133	129	124	119	118		
207	1-1/4	4895	3461	20000	339	329	319	311	303	301	290	279				
	1-5/16			30000	296	287	279	272	265	263	254	244				
	1-3/8			40000	269	261	254	247	241	239	230	221				
	1-7/16			60000	235	228	221	216	210	208	201	193				
	35mm			100000	198	192	187	182	177	176	170	163				
208	1-1/2	6232	4475	20000	432	419	407	396	386	383	369					
	1-5/8			30000	377	366	355	346	337	334	323					
	40mm			40000	343	332	323	314	307	304	293					
				60000	300	290	282	275	268	265	256					
				100000	253	245	238	232	226	224	216					
209	1-5/8	6707	4906	20000	465	450	438	426	416	412	398					
	1-11/16			30000	406	394	382	372	363	360	347					
	1-3/4			40000	369	358	347	338	330	327	316					
	45mm			60000	322	312	303	295	288	286	276					
				100000	272	263	256	249	243	241	233					
210	1-15/16	6707	5213	20000	465	450	438	426	416	412						
	2			30000	406	394	382	372	363	360						
	50mm			40000	369	358	347	338	330	327						
				60000	322	312	303	295	288	286						
				100000	272	263	256	249	243	241						

* Slight interference fit required when operating on the right of the heavy line or in the shaded area.
▲ Piloted flange only

NOTE: Bearing analysis program "BEST" is available on www.ptwizard.com

FEATURES/BENEFITS PAGE B1-3	HOW TO ORDER/NOMENCLATURE PAGE B1-6	DIMENSIONS PAGE B1-15	ACCESSORIES PAGE B1-35

EASY SELECTION



Chemical Resistance Chart*

	Housing		Ball Bearing Insert	
	Polymer	Stainless	EZ-KLEEN	ULTRA-KLEEN
A				
Acetic Acid	B	B	A	B
Acetone	B	A	A	B
Ammonium Chloride		B	A	B
Ammonium Hydroxide	D	A		A
Aniline	A	A	B	A
B				
Beer		A	A	
Beet Sugar Liquids		A		
Benzene	B	B	B	B
Bleaching Lye	A			
Brake Fluid	A			
Butane	A	A	A	
Butanol	B	A	A	
Butyl Acetate	A	B	A	
C				
Calcium Chloride	A	B	A	C
Calcium Hydroxide		B	A	
Calcium Hypochlorite	A	D	B	C
Carbon Disulphide	A	B	B	
Carbon Tetrachloride	A	B	A	A
Chloroform	D	A	A	A
Chromic Acid	A	B	A	B
Citric Acid	A	A	A	A
Cresol	D	A		
D				
Detergents	A	A	A	A
Diesel Fuel	A	A	B	
E				
Ethanol	A	A		A
Ether (diethyl-)	A	A	B	A
Ethyl Acetate	B	B	B	
Ethylene Dichloride	D	B	B	
F				
Ferrous Chloride		D	B	
Formaldehyde		B	B	
Formic Acid	B	B	A	B
Freon 11	A	A	A	

Where: (A) = No Effect - Excellent
(B) = Minor Effect - Good
(C) = Moderate Effect - Fair
(D) = Severe Effect - Not Recommended
Blank = No Data Available

NOTE: All references assume exposure temperature of 72°F.

* This chemical resistance chart is intended as a guideline. For exposure to high concentrations, prolonged contact, or higher operating temperatures, etc. reliance upon actual application experience is best. Aggressive relubrication intervals may also benefit bearing life. Contact application engineering at 864-284-5700 for assistance.

NOTE: Bearing analysis program "BEST" is available on www.ptwizard.com



Chemical Resistance Chart*

	Housing		Ball Bearing Insert	
	Polymer	Stainless	EZ-KLEEN	ULTRA-KLEEN
G				
Gasoline	A	A	A	A
Glycerol (Glycerin)	B	A	A	A
Glycol	B			
Grease	A	A	A	A
H				
Heptane	A	A	A	
Hexane	A	A	A	
Hydrochloric Acid (20%)	A	D	B	D
Hydrochloric Acid (100%)	D	D	C	D
Hydrofluoric Acid (20%)	D	D	B	D
Hydrofluoric Acid (100%)	D	D	C	D
Hydrogen Peroxide (10%)	A	C	A	
Hydrogen Peroxide (30%)	B	C	A	
I, K, L				
Iodine		D	B	D
Isopropanol (Isopropyl Alcohol)	B	A	A	
Kerosene	A	A	A	A
Lithium Chloride		A		
M				
Methanol	A	A	A	A
Methylene Chloride	D	B	B	
Methyl Ethyl Ketone	A	A	A	
Mineral Oil	A	A	A	A
Motor Oils	A	A	A	A
N				
Nitric Acid (10%)	A	A	A	A
Nitric Acid (20%)	D	A	A	A
Nitric Acid (50%)	D	A	A	A
O				
Oleic Acid	A	A	B	B
Olive Oil	A	A	A	A
P				
Perchloroethylene	A	B	B	
Phenol	B	B	A	
Phosphoric Acid (<40%)	A	B	A	A
Phosphoric Acid (>40%)	A	C	A	B
Potassium Chloride	A	B	A	B

Where: (A) = No Effect - Excellent
(B) = Minor Effect - Good
(C) = Moderate Effect - Fair
(D) = Severe Effect - Not Recommended
Blank = No Data Available

NOTE: All references assume exposure temperature of 72°F.

* This chemical resistance chart is intended as a guideline. For exposure to high concentrations, prolonged contact, or higher operating temperatures, etc. reliance upon actual application experience is best. Aggressive relubrication intervals may also benefit bearing life. Contact application engineering at 864-284-5700 for assistance.

NOTE: Bearing analysis program "BEST" is available on www.ptwizard.com

FEATURES/BENEFITS PAGE B1-3	HOW TO ORDER/NOMENCLATURE PAGE B1-6	DIMENSIONS PAGE B1-15	ACCESSORIES PAGE B1-35

EASY SELECTION



Chemical Resistance Chart*

	Housing		Ball Bearing Insert	
	Polymer	Stainless	EZ-KLEEN	ULTRA-KLEEN
P (Continued)				
Potassium Dichromate	A	B	B	B
Potassium Hydroxide	D	B	A	B
Potassium Permanganate	A	A	B	B
S				
Silicone	A	B	A	A
Soap Solution	A	A	A	A
Sodium Bicarbonate	A	A	A	A
Sodium Bisulfate		D	B	B
Sodium Bisulfite	A	B	B	B
Sodium Carbonate	A	A	A	B
Sodium Chloride	A	B	A	B
Sodium Hydroxide (20%)	D	A	A	A
Sodium Hydroxide (50%)	D	B	A	
Sodium Hydroxide (80%)	D	C	B	
Sodium Hypochlorite (<20%)	A	C	B	C
Sodium Hypochlorite (100%)	B	D	B	D
Sulfuric Acid (<10%)	A	D	A	C
Sulfuric Acid (10 - 75%)	A	D	B	D
Sulfuric Acid (>75%)	D	D	C	D
T				
Tetrahydofuran	B	A	A	
Toulene	A	A	A	
Trichlorethylene	B	B	A	
Triethylamine		A	A	
Turpentine	A	A	A	
V, W, X				
Vegetable Oils	A	A	A	A
Water	A	A	A	A
Xylene	A	B	A	

Where: (A) = No Effect - Excellent
(B) = Minor Effect - Good
(C) = Moderate Effect - Fair
(D) = Severe Effect - Not Recommended
Blank = No Data Available

NOTE: All references assume exposure temperature of 72°F.

* This chemical resistance chart is intended as a guideline. For exposure to high concentrations, prolonged contact, or higher operating temperatures, etc. reliance upon actual application experience is best. Aggressive relubrication intervals may also benefit bearing life. Contact application engineering at 864-284-5700 for assistance.

NOTE: Bearing analysis program “BEST” is available on www.ptwizard.com

DODGE®



ULTRA KLEEN Mounted Bearings
SCEZ PSS NORMAL DUTY POLYMER HOUSED PILLOW BLOCKS

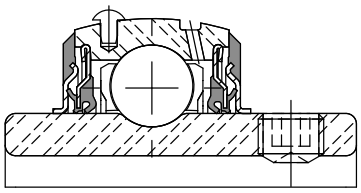

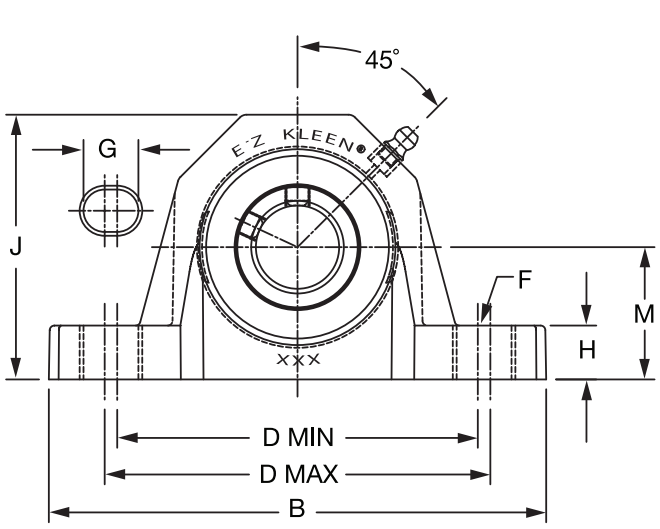

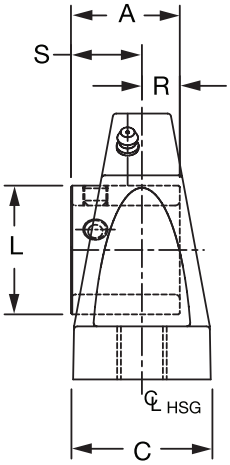

Series	Shaft Size	With Stainless Steel Insert		Weight lbs *kg*	A	B	C	D		F Bolt Dia.	G	H	J	L	M	R	S
		Part No.	Description					min.	max.								
204	3/4	**136695**	P2B-SCEZ-012-PSS	0.64	1.23	5.02	1.48	3.66	3.92	3/8	0.59	0.61	2.63	1.11	1.31	0.50	0.73
	20mm	***136740***	*P2B-SCEZ-20M-PSS*	*0.30*	*31.2*	*127.5*	*37.6*	*93.0*	*99.6*	*M10*	*15.0*	*15.5*	*66.8*	*28.2*	*33.3*	*12.7*	*18.5*
205	1	**136696**	P2B-SCEZ-100-PSS	0.69	1.34	5.48	1.48	3.96	4.20	3/8	0.59	0.61	2.86	1.32	1.44	0.56	0.78
	25mm	***136741***	*P2B-SCEZ-25M-PSS*	*0.32*	*34.0*	*139.2*	*37.6*	*100.6*	*106.7*	*M10*	*15.0*	*15.5*	*72.6*	*33.5*	*36.6*	*14.2*	*19.8*
206	1-3/16	**136697**	P2B-SCUEZ-103-PSS	1.13	1.52	6.30	1.77	4.60	4.88	1/2	0.73	0.70	3.34	1.57	1.69	0.58	0.94
	1-1/4	**136698**	P2B-SCUEZ-104S-PSS	1.11													
	30mm	***136742***	*P2B-SCUEZ-30M-PSS*	*0.51*	*38.6*	*160.0*	*45.0*	*116.8*	*124.0*	*M12*	*18.5*	*17.8*	*84.8*	*39.9*	*42.9*	*14.7*	*23.9*
207	1-1/4	**136699**	P2B-SCEZ-104-PSS	1.68	1.71	6.54	1.86	4.80	5.12	1/2	0.73	0.72	3.89	1.84	1.88	0.67	1.04
	1-7/16	**136700**	P2B-SCEZ-107-PSS	1.52													
	35mm	***136743***	*P2B-SCEZ-35M-PSS*	*0.74*	*43.4*	*166.1*	*47.2*	*121.9*	*130.0*	*M12*	*18.5*	*18.3*	*98.8*	*46.7*	*47.8*	*17.0*	*26.4*
208	1-1/2	**136701**	P2B-SCBEZ-108-PSS	2.08	1.94	7.19	2.10	5.10	5.64	1/2	0.88	0.76	4.16	2.05	1.94	0.75	1.19
	40mm	***136744***	*P2B-SCBEZ-40M-PSS*	*0.88*	*49.3*	*182.6*	*53.3*	*129.5*	*143.3*	*M12*	*22.4*	*19.3*	*105.7*	*52.1*	*49.3*	*19.1*	*30.2*
209	1-11/16	**136702**	P2B-SCEZ-111-PSS	2.34	1.94	7.20	2.10	5.42	5.96	1/2	0.88	0.84	4.31	2.22	2.13	0.75	1.19
	45mm	***136745***	*P2B-SCEZ-45M-PSS*	*1.03*	*49.3*	*182.9*	*53.3*	*137.7*	*151.4*	*M12*	*22.4*	*21.3*	*109.5*	*56.4*	*54.1*	*19.1*	*30.2*
210	1-15/16	**136703**	P2B-SCEZ-115-PSS	2.65	1.94	8.06	2.36	6.00	6.56	5/8	1.00	0.91	4.56	2.43	2.25	0.75	1.19
	2	**136986**	P2B-SCEZ-200-PSS	2.58													
	50mm	***136746***	*P2B-SCEZ-50M-PSS*	*1.30*	*49.3*	*204.7*	*59.9*	*152.4*	*166.6*	*M16*	*25.4*	*23.1*	*115.8*	*61.7*	*57.2*	*19.1*	*30.2*

FEATURES/BENEFITS PAGE B1-3	HOW TO ORDER/NOMENCLATURE PAGE B1-6	EASY SELECTION PAGE B1-7	ACCESSORIES PAGE B1-35

SELECTION/DIMENSIONS

ULTRA KLEEN Mounted Bearings
SCEZ SHSS NORMAL DUTY STAINLESS STEEL HOUSED PILLOW BLOCKS

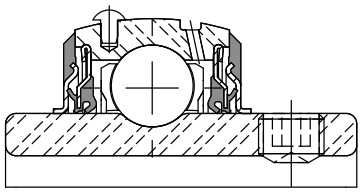

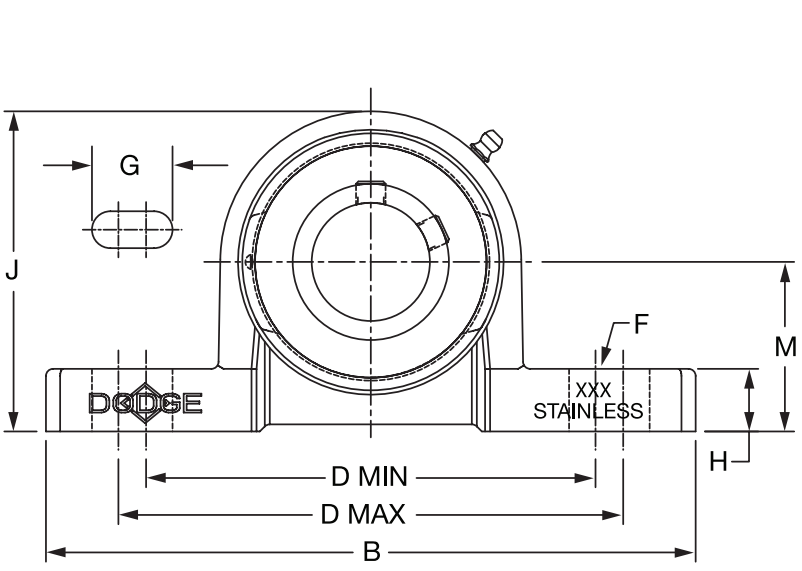

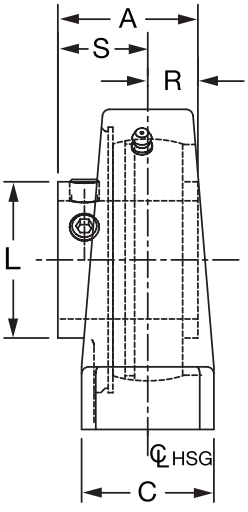

Series	Shaft Size	With Stainless Steel Insert		Weight lbs *kg*	A	B	C	D		F Bolt Dia.	G	H	J	L	M	R	S
		Part No.	Description					min.	max.								
204	3/4	**136773**	P2B-SCEZ-012-SHSS	1.31	1.23	5.00	1.00	3.38	4.18	3/8	0.84	0.50	2.50	1.11	1.31	0.5	0.73
	20mm	***136849***	*P2B-SCEZ-20M-SHSS*	*0.59*	*31.2*	*127.0*	*25.4*	*85.9*	*106.2*	*M10*	*21.3*	*12.7*	*63.5*	*28.2*	*33.3*	*12.7*	*18.5*
205	1	**136774**	P2B-SCEZ-100-SHSS	1.59	1.34	5.50	1.12	3.68	4.50	3/8	0.85	0.53	2.71	1.32	1.44	0.56	0.78
	25mm	***136850***	*P2B-SCEZ-25M-SHSS*	*0.73*	*34.0*	*139.7*	*28.4*	*93.5*	*114.3*	*M10*	*21.6*	*13.5*	*68.8*	*33.5*	*36.6*	*14.2*	*19.8*
206	1-3/16	**136775**	P2B-SCEZ-103-SHSS	2.33	1.52	6.25	1.25	4.26	5.00	1/2	0.93	0.53	3.13	1.57	1.63	0.58	0.94
	1-1/4	**136777**	P2B-SCEZ-104S-SHSS	2.29													
	30mm	***@***	*P2B-SCEZ-30M-SHSS*	*1.06*	*38.6*	*158.8*	*31.8*	*108.2*	*127.0*	*M12*	*23.6*	*13.5*	*79.5*	*39.9*	*41.4*	*14.7*	*23.9*
206 (SCU)	1-3/16	**136776**	P2B-SCUEZ-103-SHSS	2.44	1.52	6.25	1.25	4.26	5.00	1/2	0.93	0.59	3.19	1.57	1.69	0.58	0.94
	1-1/4	**136778**	P2B-SCUEZ-104S-SHSS	2.39													
	30mm	***136851***	*P2B-SCUEZ-30M-SHSS*	*1.11*	*38.6*	*158.8*	*31.8*	*108.2*	*127.0*	*M12*	*23.6*	*15.0*	*81.0*	*39.9*	*42.9*	*14.7*	*23.9*
207	1-1/4	**136779**	P2B-SCEZ-104-SHSS	3.36	1.71	6.50	1.38	4.68	5.44	1/2	0.94	0.56	3.63	1.84	1.88	0.67	1.04
	1-7/16	**136780**	P2B-SCEZ-107-SHSS	3.19													
	35mm	***136852***	*P2B-SCEZ-35M-SHSS*	*1.47*	*43.4*	*165.1*	*35.1*	*118.9*	*138.2*	*M12*	*23.9*	*14.2*	*92.2*	*46.7*	*47.8*	*17.0*	*26.4*
208	1-1/2	**136781**	P2B-SCEZ-108-SHSS	4.39	*1.94*	*7.00*	*1.50*	*5.18*	*6.00*	*1/2*	*0.97*	*0.75*	*4.00*	*2.05*	*2.13*	*0.75*	*1.19*
	40mm	***@***	*P2B-SCEZ-40M-SHSS*	*1.95*	*49.3*	*177.8*	*38.1*	*131.6*	*152.4*	*M12*	*24.6*	*19.1*	*101.6*	*52.1*	*54.1*	*19.1*	*30.2*
208 (SCB)	1-1/2	**136782**	P2B-SCBEZ-108-SHSS	3.93	1.94	7.00	1.50	5.18	6.00	1/2	0.97	0.56	3.81	2.05	1.94	0.75	1.19
	40mm	***136853***	*P2B-SCBEZ-40M-SHSS*	*1.74*	*49.3*	*177.8*	*38.1*	*131.6*	*152.4*	*M12*	*24.6*	*14.2*	*96.8*	*52.1*	*49.3*	*19.1*	*30.2*
210	1-15/16	**136783**	P2B-SCEZ-115-SHSS	5.14	1.94	8.00	1.63	5.76	6.68	5/8	1.14	0.62	4.31	2.43	2.25	0.75	1.19
	2	**136989**	P2B-SCEZ-200-SHSS	5.09													
	50mm	***136854***	*P2B-SCEZ-50M-SHSS*	*2.29*	*49.3*	*203.2*	*41.4*	*146.3*	*169.7*	*M16*	*29.0*	*15.7*	*109.5*	*61.7*	*57.2*	*19.1*	*30.2*

DODGE®



ULTRA KLEEN Mounted Bearings

SCEZ PSS NORMAL DUTY POLYMER HOUSED TAPPED BASE PILLOW BLOCKS

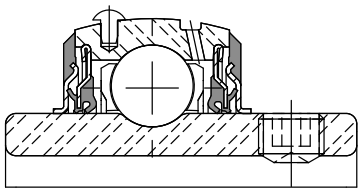

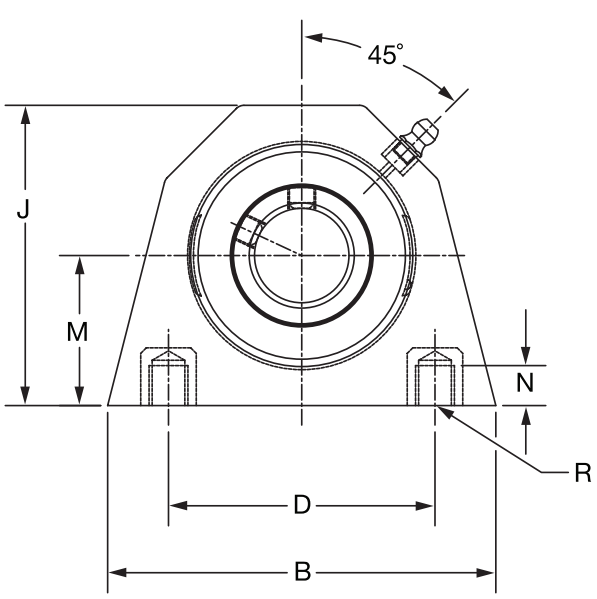

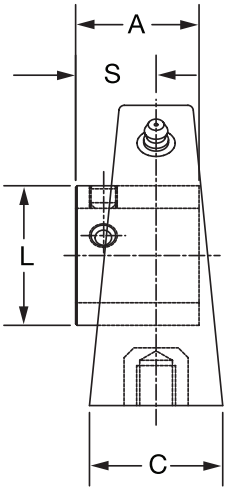

Series	Shaft Size	With Stainless Steel Insert		Weight lbs *kg*	A	B	C	D	J	L	M	N Thread Depth	R Bolt Hole Threads	S
		Part No.	Description											
204	3/4	**136704**	TB-SCEZ-012-PSS	0.60	1.23	3.25	1.48	2.00	2.65	1.11	1.31	0.40	3/8-16	0.73
	20mm	***136747***	*TB-SCEZ-20M-PSS*	*0.29*	*31.2*	*82.6*	*37.6*	*50.8*	*67.3*	*28.2*	*33.4*	*10.2*	*M10x1.5*	*18.5*
205	1	**136705**	TB-SCEZ-100-PSS	0.58	1.34	3.25	1.49	2.00	2.89	1.32	1.44	0.40	3/8-16	0.78
	25mm	***136748***	*TB-SCEZ-25M-PSS*	*0.28*	*34.0*	*82.6*	*37.8*	*50.8*	*73.4*	*33.5*	*36.5*	*10.2*	*M10x1.5*	*19.8*
206	1-3/16	**136706**	TB-SCEZ-103-PSS	1.09	1.52	4.38	1.57	3.00	3.38	1.57	1.69	0.45	7/16-14	0.94
	1-1/4	**136707**	TB-SCEZ-104S-PSS	1.07										
	30mm	***136749***	*TB-SCEZ-30M-PSS*	*0.49*	*38.6*	*111.3*	*39.9*	*76.2*	*85.9*	*39.9*	*42.9*	*11.4*	*M10x1.5*	*23.9*
207	1-1/4	**136708**	TB-SCEZ-104-PSS	1.64	1.71	4.63	1.89	3.25	3.82	1.84	1.88	0.55	1/2-13	1.04
	1-7/16	**136709**	TB-SCEZ-107-PSS	1.48										
	35mm	***136750***	*TB-SCEZ-35M-PSS*	*0.72*	*43.4*	*117.6*	*48.0*	*82.6*	*97.0*	*46.7*	*47.6*	*14.0*	*M12x1.75*	*26.4*

FEATURES/BENEFITS PAGE B1-3	HOW TO ORDER/NOMENCLATURE PAGE B1-6	EASY SELECTION PAGE B1-7	ACCESSORIES PAGE B1-35

SELECTION/DIMENSIONS

ULTRA KLEEN Mounted Bearings
SCEZ SHSS NORMAL DUTY STAINLESS STEEL TAPPED BASE BEARINGS

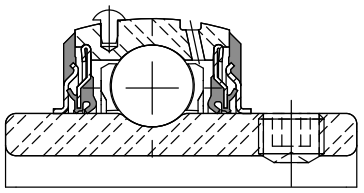

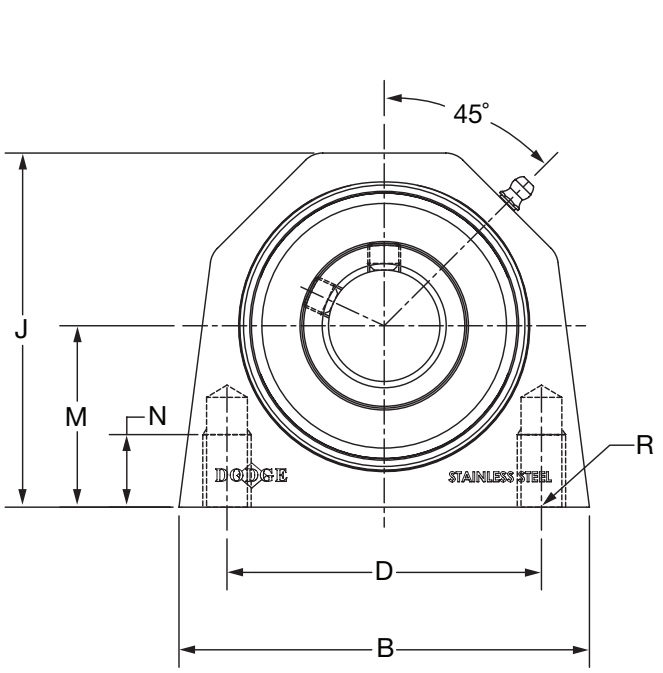

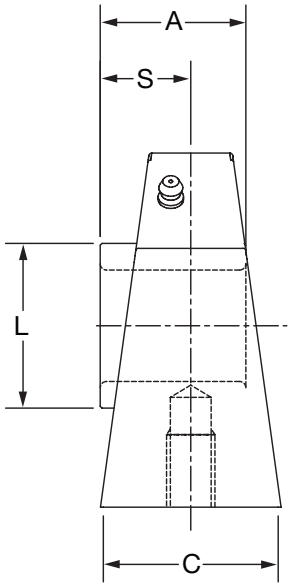

Series	Shaft Size	With Stainless Steel Insert		Weight lbs. *kg*	A	B	C	D	J	L	M	N	R	S
		Part No.	Description											
204	3/4	**136784**	TB-SCEZ-012-SHSS	1.27	1.23	2.77	1.36	2.00	2.50	1.11	1.31	0.45	3/8-16	0.73
	20mm	***136855***	*TB-SCEZ-20M-SHSS*	*.576*	*31.2*	*70.4*	*34.5*	*50.8*	*63.5*	*28.2*	*33.4*	*11.4*	*3/8-16*	*18.5*
205	1	**136785**	TB-SCEZ-100-SHSS	1.48	1.34	3.06	1.39	2.00	2.75	1.32	1.44	0.45	3/8-16	0.78
	25mm	***136856***	*TB-SCEZ-25M-SHSS*	*.671*	*34.0*	*77.7*	*35.3*	*50.8*	*69.9*	*33.5*	*36.5*	*11.4*	*3/8-16*	*19.8*
206	1-3/16	**136786**	TB-SCEZ-103-SHSS	2.49	1.52	3.84	1.50	3.00	3.22	1.57	1.69	0.88	7/16-14	0.94
	1-1/4	**136787**	TB-SCEZ-104S-SHSS											
	30mm	***136857***	*TB-SCEZ-30M-SHSS*	*1.13*	*38.6*	*97.5*	*38.1*	*76.2*	*81.8*	*39.9*	*42.9*	*22.4*	*7/16-14*	*23.9*
207	1-1/4	**136788**	TB-SCEZ-104-SHSS	3.55	1.71	4.15	1.77	3.25	3.66	1.84	1.88	0.75	1/2-13	1.04
	1-7/16	**136789**	TB-SCEZ-107-SHSS											
	35mm	***136858***	*TB-SCEZ-35M-SHSS*	*1.61*	*43.4*	*105.4*	*45.0*	*82.6*	*93.0*	*46.7*	*47.6*	*19.1*	*1/2-13*	*26.4*
208	1-1/2	**136788**	TB-SCEZ-104-SHSS	4.21	1.94	4.51	1.80	3.50	4.00	2.05	2.13	1.00	1/2-13	1.19
	40mm	***136859***	*TB-SCEZ-40M-SHSS*	*1.91*	*49.3*	*114.6*	*45.7*	*88.9*	*101.6*	*52.1*	*54.0*	*25.4*	*1/2-13*	*30.2*
210	1-15/16	**136792**	TB-SCEZ-115-SHSS	5.67	1.94	5.37	1.92	4.00	4.47	2.43	2.25	1.25	5/8-11	1.19
	2	**136990**	TB-SCEZ-200-SHSS											
	50mm	***136860***	*TB-SCEZ-50M-SHSS*	*2.57*	*49.3*	*136.4*	*48.8*	*101.6*	*113.5*	*61.7*	*57.2*	*31.8*	*5/8-11*	*30.2*

DODGE®



ULTRA KLEEN Mounted Bearings
SCEZ PSS NORMAL DUTY POLYMER HOUSED 2-BOLT FLANGE BEARINGS

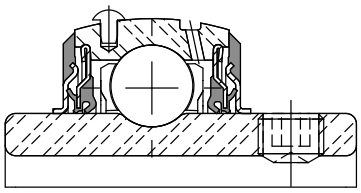

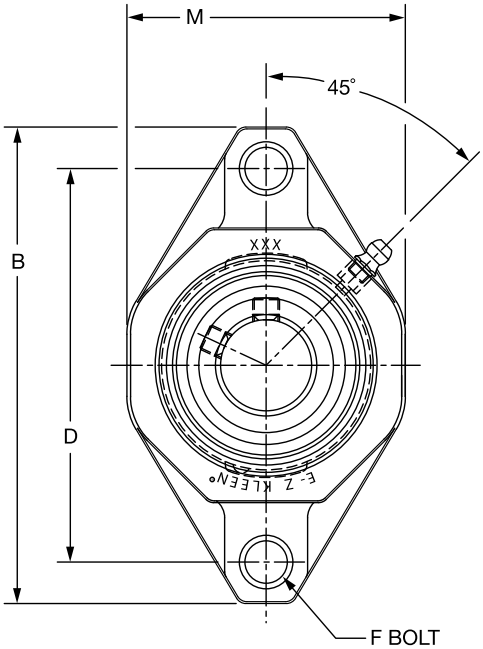

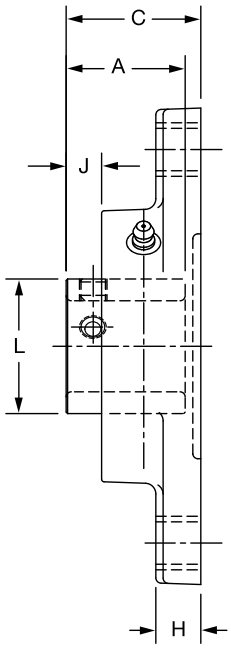

Series	Shaft Size	With Stainless Steel Insert		Weight lbs *kg*	A	B	C	D	F Bolt Dia.	H	J	L	M
		Part No.	Description										
204	3/4	**136710**	F2B-SCEZ-012-PSS	0.40	1.23	4.45	1.44	3.54	3/8	0.53	0.32	1.11	2.35
	20mm	***136751***	*F2B-SCEZ-20M-PSS*	*0.24*	*31.2*	*113.0*	*36.4*	*89.9*	*M10*	*13.5*	*8.0*	*28.2*	*59.7*
205	1	**136711**	F2B-SCEZ-100-PSS	0.56	1.34	4.92	1.50	3.90	3/8	0.54	0.36	1.32	2.71
	25mm	***136752***	*F2B-SCEZ-25M-PSS*	*0.28*	*34.0*	*125.0*	*38.1*	*99.1*	*M10*	*13.7*	*9.2*	*33.5*	*68.8*
206	1-3/16	**136712**	F2B-SCEZ-103-PSS	0.86	1.52	5.58	1.69	4.59	3/8	0.60	0.45	1.57	3.19
	1-1/4	**136713**	F2B-SCEZ-104S-PSS	0.84									
	30mm	***136753***	*F2B-SCEZ-30M-PSS*	*0.39*	*38.6*	*141.7*	*42.9*	*116.6*	*M10*	*15.2*	*11.4*	*39.9*	*81.0*
207	1-1/4	**136714**	F2B-SCEZ-104-PSS	1.36	1.71	6.31	1.82	5.12	1/2	0.62	0.54	1.84	3.69
	1-7/16	**136715**	F2B-SCEZ-107-PSS	1.24									
	35mm	***136754***	*F2B-SCEZ-35M-PSS*	*0.61*	*43.4*	*160.3*	*46.3*	*130.0*	*M12*	*15.7*	*13.8*	*46.7*	*93.7*
208	1-1/2	**136716**	F2B-SCEZ-108-PSS	1.82	1.94	6.77	2.08	5.65	1/2	0.67	0.63	2.05	4.06
	40mm	***136755***	*F2B-SCEZ-40M-PSS*	*0.76*	*49.3*	*172.0*	*52.8*	*143.5*	*M12*	*17.0*	*15.9*	*52.1*	*103.1*
209	1-11/16	**136717**	F2B-SCEZ-111-PSS	2.00	1.94	7.07	2.08	5.85	9/16	0.72	0.62	2.22	4.31
	45mm	***136756***	*F2B-SCEZ-45M-PSS*	*0.88*	*49.3*	*179.6*	*52.8*	*148.6*	*M14*	*18.3*	*15.7*	*56.4*	*109.5*
210	1-15/16	**136718**	F2B-SCEZ-115-PSS	2.12	1.94	7.47	2.08	6.18	5/8	0.76	0.63	2.43	4.50
	2	**136987**	F2B-SCEZ-200-PSS	2.08									
	50mm	***136757***	*F2B-SCEZ-50M-PSS*	*0.96*	*49.3*	*189.7*	*52.8*	*157.0*	*M16*	*19.3*	*15.9*	*61.7*	*114.3*

SELECTION/DIMENSIONS

ULTRA KLEEN Mounted Bearings
SCEZ SHSS NORMAL DUTY STAINLESS STEEL HOUSED 2-BOLT FLANGE BEARINGS

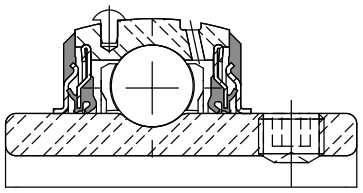

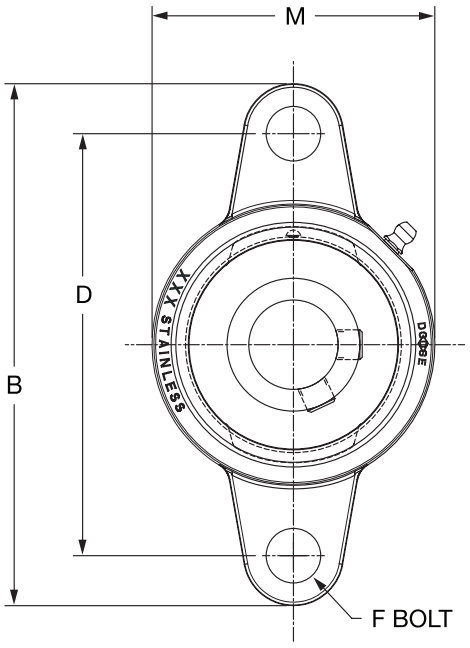

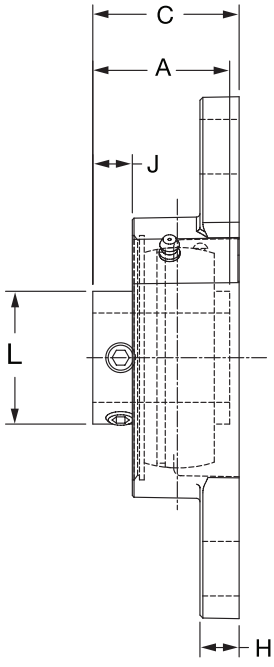

Series	Shaft Size	With Stainless Steel Insert		Weight lbs *kg*	A	B	C	D	F Bolt Dia.	H	J	L	M
		Part No.	Description										
204	3/4	**136793**	F2B-SCEZ-012-SHSS	0.95	1.23	4.38	1.25	3.54	3/8	0.32	0.36	1.11	2.38
	20mm	***136861***	*F2B-SCEZ-20M-SHSS*	*0.42*	*31.2*	*111.3*	*31.7*	*89.9*	*M10*	*8.1*	*9.1*	*28.2*	*60.5*
205	1	**136794**	F2B-SCEZ-100-SHSS	1.21	1.34	4.89	1.37	3.89	3/8	0.35	0.39	1.32	2.63
	25mm	***136862***	*F2B-SCEZ-25M-SHSS*	*0.55*	*34.0*	*124.2*	*34.7*	*98.8*	*M10*	*8.9*	*9.9*	*33.5*	*66.8*
206	1-3/16	**136795**	F2B-SCEZ-103-SHSS	1.91	1.52	5.51	1.59	4.59	3/8	0.35	0.46	1.57	3.13
	1-1/4	**136796**	F2B-SCEZ-104S-SHSS	1.87									
	30mm	***136863***	*F2B-SCEZ-30M-SHSS*	*0.87*	*38.6*	*140.0*	*40.4*	*116.6*	*M10*	*8.9*	*11.7*	*39.9*	*79.5*
207	1-1/4	**136797**	F2B-SCEZ-104-SHSS	2.64	1.71	6.18	1.76	5.12	1/2	0.42	0.55	1.84	3.50
	1-7/16	**136798**	F2B-SCEZ-107-SHSS	2.47									
	35mm	***136864***	*F2B-SCEZ-35M-SHSS*	*1.15*	*43.4*	*157.0*	*44.8*	*130.0*	*M12*	*10.7*	*13.9*	*46.7*	*88.9*
208	1-1/2	**136799**	F2B-SCEZ-108-SHSS	3.40	1.94	6.71	1.97	5.65	1/2	0.42	0.63	2.05	3.84
	40mm	***136865***	*F2B-SCEZ-40M-SHSS*	*1.50*	*49.3*	*170.4*	*50.1*	*143.5*	*M12*	*10.7*	*16.1*	*52.1*	*97.5*
210	1-15/16	**136800**	F2B-SCEZ-115-SHSS	4.17	1.94	7.48	1.98	6.18	5/8	0.48	0.63	2.43	4.31
	2	**136991**	F2B-SCEZ-200-SHSS	4.13									
	50mm	***136866***	*F2B-SCEZ-50M-SHSS*	*1.87*	*49.3*	*190.0*	*50.3*	*157.0*	*M16*	*12.2*	*16.1*	*61.7*	*109.5*

DODGE®



ULTRA KLEEN Mounted Bearings

SCEZ SHSS NORMAL DUTY STAINLESS STEEL HOUSED 2-BOLT FLANGE BEARINGS

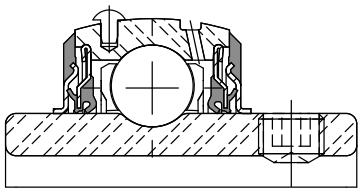

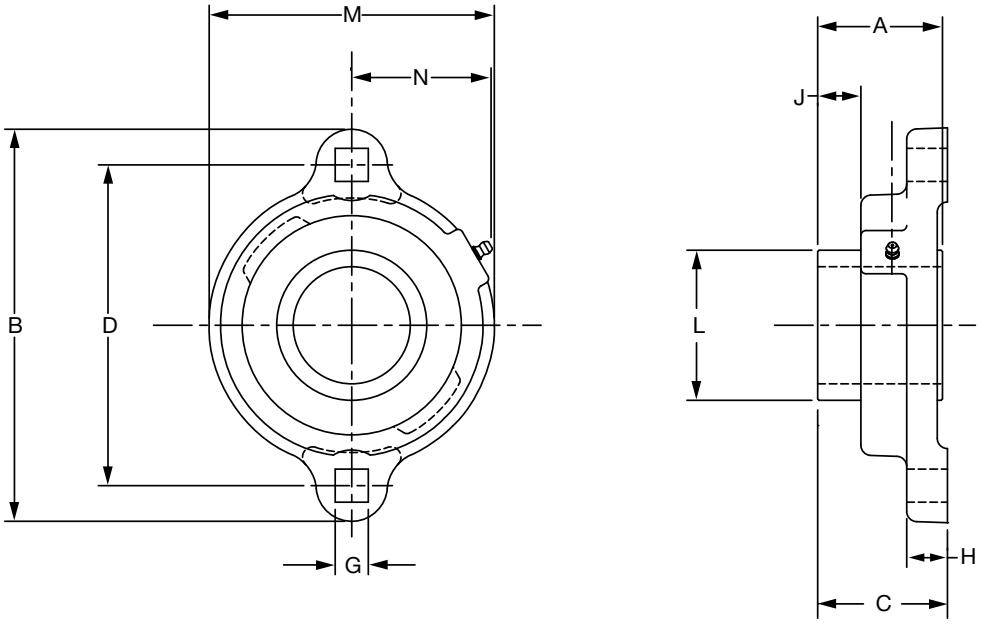

Series	Shaft Size	Standard Part No.	Standard Description	Weight lbs / kg	A	B	C	D	G	H	J	L	M	N
204	3/4	**136817**	LFT-SCEZ-012-SHSS	.68	1.23	3.56	1.25	2.81	0.34	0.58	0.37	1.11	2.38	1.55
	20 mm	***136879***	*LFT-SCEZ-20M-SHSS*	*.31*	*31.2*	*90.4*	*31.7*	*71.4*	*8.6*	*14.7*	*9.5*	*28.2*	*60.5*	*39.4*
205	1	**136818**	LFT-SCEZ-100-SHSS	.84	1.34	3.75	1.36	3.00	0.34	0.50	0.39	1.32	2.63	1.67
	25 mm	***136880***	*LFT-SCEZ-25M-SHSS*	*.38*	*34.0*	*95.3*	*34.6*	*76.2*	*8.6*	*12.7*	*10.0*	*33.5*	*66.8*	*42.4*
206	1-3/16	**136819**	LFT-SCEZ-103-SHSS	1.88	1.52	4.44	1.60	3.56	0.41	0.61	0.51	1.57	3.25	1.98
	1-1/4	**136820**	LFT-SCEZ-104S-SHSS											
	30 mm	***136881***	*LFT-SCEZ-30M-SHSS*	*.85*	*38.6*	*112.8*	*40.5*	*90.4*	*10.4*	*15.5*	*13.0*	*39.9*	*82.6*	*50.3*
207	1-1/4	**136821**	LFT-SCEZ-104-SHSS	1.77	1.71	4.81	1.74	3.94	0.41	0.67	0.55	1.84	3.50	2.09
	1-7/16	**136822**	LFT-SCEZ-107-SHSS											
	35 mm	***136882***	*LFT-SCEZ-35M-SHSS*	*.80*	*43.4*	*122.2*	*44.3*	*100.1*	*10.4*	*17.1*	*13.9*	*46.7*	*88.9*	*53.1*

FEATURES/BENEFITS PAGE B1-3	HOW TO ORDER/NOMENCLATURE PAGE B1-6	EASY SELECTION PAGE B1-7	ACCESSORIES PAGE B1-35

SELECTION/DIMENSIONS

DODGE®

ULTRA KLEEN Mounted Bearings
SCEZ SHSS NORMAL DUTY STAINLESS STEEL HOUSED 3-BOLT FLANGE BEARINGS

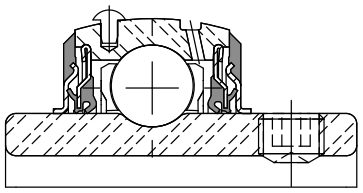

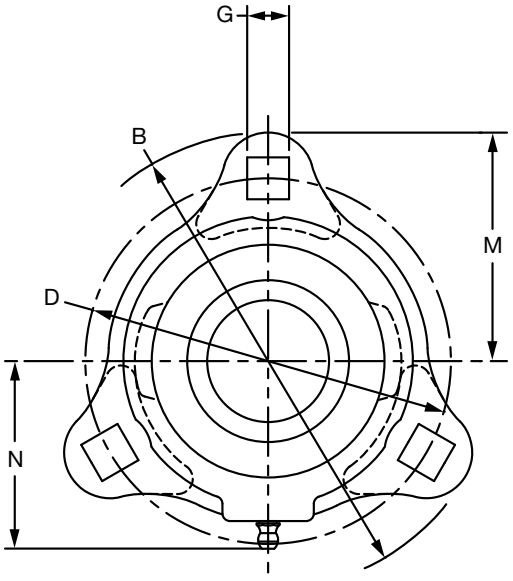

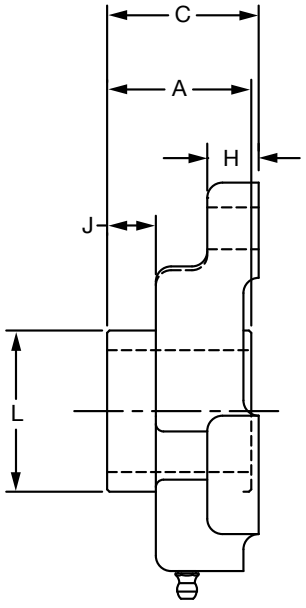

Series	Shaft Size	Standard Part No.	Standard Description	Weight lbs / kg	A	B	C	D	G	H	J	L	M	N
204	3/4	**136809**	LF-SCEZ-012-SHSS	.64	1.23	3.56	1.25	2.81	0.34	0.58	0.37	1.11	1.78	1.55
	20 mm	***136873***	*LF-SCEZ-20M-SHSS*	*.29*	*31.2*	*90.4*	*31.7*	*71.4*	*8.6*	*14.7*	*9.5*	*28.2*	*45.2*	*39.4*
205	1	**136810**	LF-SCEZ-100-SHSS	.80	1.34	3.75	1.36	3.00	0.34	0.50	0.39	1.32	1.88	1.67
	25 mm	***136874***	*LF-SCEZ-25M-SHSS*	*.36*	*34.0*	*95.3*	*34.6*	*76.2*	*8.6*	*12.7*	*10.0*	*33.5*	*47.8*	*42.4*
206	1-3/16	**136811**	LF-SCEZ-103-SHSS	1.09	1.52	4.44	1.60	3.56	0.41	0.61	0.51	1.57	2.22	1.98
	1-1/4	**136812**	LF-SCEZ-104S-SHSS											
	30 mm	***136875***	*LF-SCEZ-30M-SHSS*	*.54*	*38.6*	*112.8*	*40.5*	*90.4*	*10.4*	*15.5*	*13.0*	*39.9*	*56.4*	*50.3*
207	1-1/4	**136813**	LF-SCEZ-104-SHSS	1.73	1.71	4.81	1.74	3.94	0.41	0.67	0.55	1.84	2.41	2.09
	1-7/16	**136814**	LF-SCEZ-107-SHSS											
	35 mm	***136876***	*LF-SCEZ-35M-SHSS*	*.79*	*43.4*	*122.2*	*44.3*	*100.1*	*10.4*	*17.1*	*13.9*	*46.7*	*61.2*	*53.1*

DODGE®



ULTRA KLEEN Mounted Bearings
SCEZ PSS NORMAL DUTY POLYMER HOUSED FLANGE BEARING

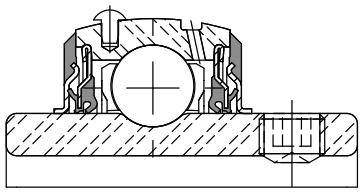

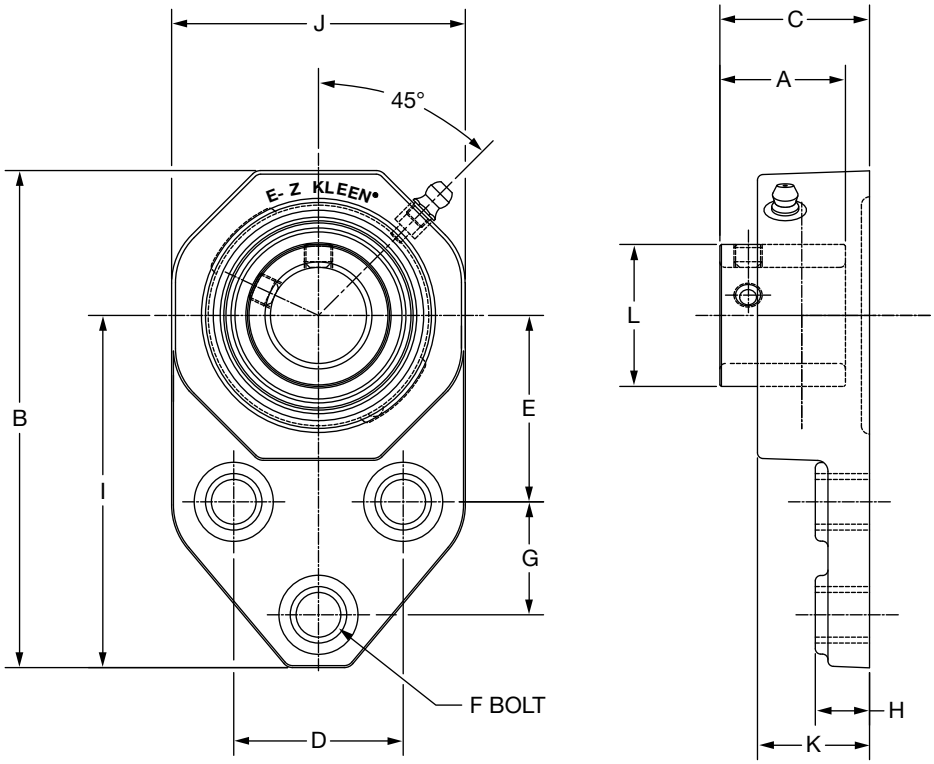

Series	Shaft Size	With Stainless Steel Insert		Weight lbs *kg*	A	B	C	D	E	F Bolt Dia.	G	H	I	J	K	L
		Part No.	Description													
204	3/4	**136719**	FB-SCEZ-012-PSS	0.47	1.23	4.39	1.44	1.50	1.69	3/8	0.88	0.53	3.22	2.34	1.12	1.11
	20mm	***136758***	*FB-SCEZ-20M-PSS*	*0.23*	*31.2*	*111.5*	*36.4*	*38.1*	*42.9*	*M10*	*22.4*	*13.5*	*81.8*	*59.4*	*28.4*	*28.2*
205	1	**136720**	FB-SCEZ-100-PSS	0.69	1.34	4.91	1.50	1.63	1.81	3/8	1.13	0.54	3.56	2.71	1.14	1.32
	25mm	***136759***	*FB-SCEZ-25M-PSS*	*0.32*	*34.0*	*124.7*	*38.1*	*41.4*	*46.0*	*M10*	*28.7*	*13.7*	*90.4*	*68.8*	*29.0*	*33.5*
206	1-3/16	**136721**	FB-SCEZ-103-PSS	1.07	1.52	5.48	1.69	1.88	2.06	3/8	1.25	0.60	3.88	3.20	1.24	1.57
	1-1/4	**136722**	FB-SCEZ-104S-PSS	1.05												
	30mm	***136760***	*FB-SCEZ-30M-PSS*	*0.48*	*38.6*	*139.2*	*42.9*	*47.8*	*52.3*	*M10*	*31.8*	*15.2*	*98.6*	*81.3*	*31.5*	*39.9*
207	1-1/4	**136723**	FB-SCEZ-104-PSS	1.87	1.71	6.11	1.82	2.00	2.38	1/2	1.25	0.62	4.26	3.69	1.28	1.84
	1-7/16	**136724**	FB-SCEZ-107-PSS	1.71												
	35mm	***136761***	*FB-SCEZ-35M-PSS*	*0.83*	*43.4*	*155.2*	*46.3*	*50.8*	*60.5*	*M12*	*31.8*	*15.7*	*108.2*	*93.7*	*32.5*	*46.7*

SELECTION/DIMENSIONS

ULTRA KLEEN Mounted Bearings
SCEZ SHSS NORMAL DUTY STAINLESS STEEL HOUSED FLANGE BRACKET BEARINGS

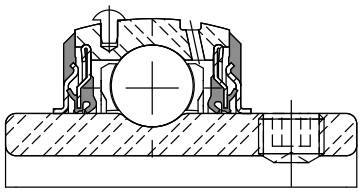

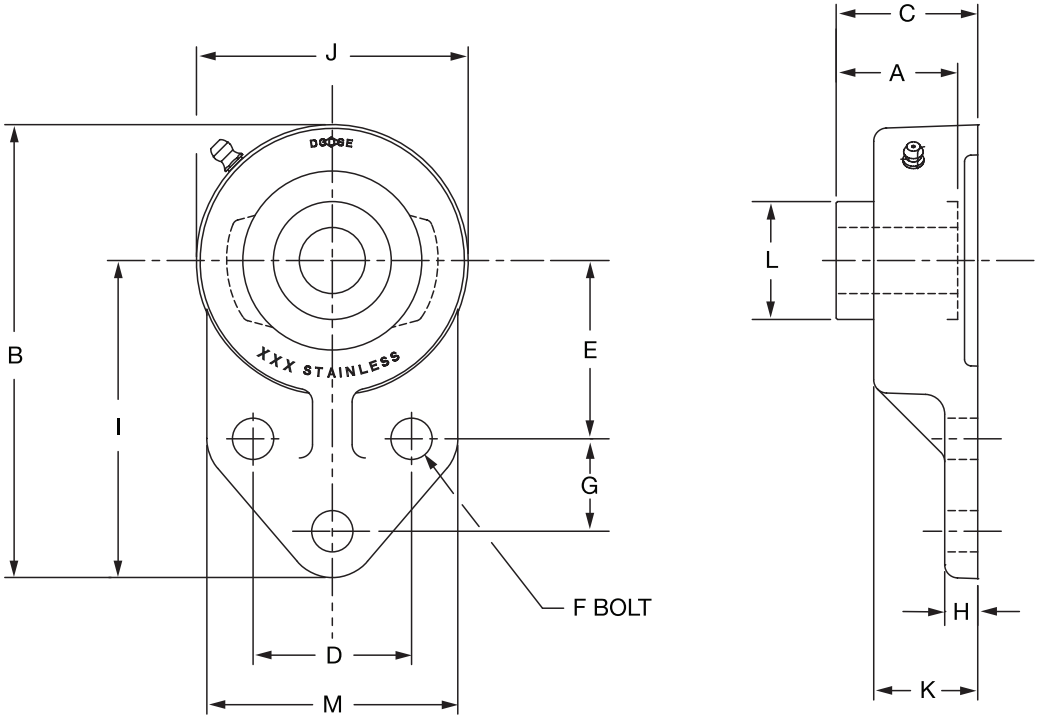

Series	Shaft Size	With Stainless Steel Insert	
		Part No.	Description
204	3/4	**136801**	FB-SCEZ-012-SHSS
	20mm	***136867***	*FB-SCEZ-20M-SHSS*
205	1	**136802**	FB-SCEZ-100-SHSS
	25mm	***136868***	*FB-SCEZ-25M-SHSS*
206	1-3/16	**136803**	FB-SCEZ-103-SHSS
	1-1/4	**136804**	FB-SCEZ-104S-SHSS
	30mm	***136869***	*FB-SCEZ-30M-SHSS*
207	1-1/4	**136805**	FB-SCEZ-104-SHSS
	1-7/16	**136806**	FB-SCEZ-107-SHSS
	35mm	***136870***	*FB-SCEZ-35M-SHSS*
210	1-15/16	**136808**	FB-SCEZ-115-SHSS
	2	**136992**	FB-SCEZ-200-SHSS
	50mm	***136872***	*FB-SCEZ-50M-SHSS*



ULTRA KLEEN Mounted Bearings

SCEZ SHSS NORMAL DUTY STAINLESS STEEL HOUSED FLANGE BRACKET BEARINGS

Series	Shaft Size	Weight lbs *kgs*	A	B	C	D	E	F Bolt Dia	G	H	I	J	K	L	M
204	3/4	1.00	1.23	4.19	1.25	1.50	1.69	3/8	0.88	0.31	3.00	2.38	0.90	1.11	2.38
	20 mm	.45	31.2	106.4	31.8	38.1	42.9	M10	22.4	7.9	76.2	60.4	22.9	28.2	60.5
205	1	1.26	1.34	4.69	1.37	1.63	1.81	3/8	1.13	0.38	3.38	2.62	0.98	1.32	2.50
	25 mm	.52	34.0	119.1	34.7	41.4	46.0	M10	28.7	9.7	85.9	66.4	24.9	33.5	63.5
206	1-3/16	1.95	1.52	5.31	1.59	1.88	2.06	3/8	1.25	0.38	3.75	3.12	1.14	1.57	2.75
	1-1/4														
	30 mm	.89	38.6	134.9	40.4	47.8	52.3	M10	31.8	9.7	95.3	79.2	29.0	39.9	69.9
207	1-1/4	2.87	1.71	6.00	1.76	2.00	2.38	1/2	1.25	0.50	4.25	3.12	1.22	1.84	3.25
	1-7/16														
	35 mm	1.3	43.4	152.4	44.8	50.8	60.5	M12	31.8	12.7	108.0	88.8	31.0	46.7	82.6
210	1-15/16	4.43	1.94	7.34	1.98	2.75	2.94	1/2	1.63	0.50	5.19	4.30	1.35	2.43	4.00
	2														
	50 mm	2.01	49.3	186.4	50.3	69.9	74.7	M12	41.4	12.7	131.8	109.2	34.3	61.7	101.6

FEATURES/BENEFITS PAGE B1-3	HOW TO ORDER/NOMENCLATURE PAGE B1-6	EASY SELECTION PAGE B1-7	ACCESSORIES PAGE B1-35

SELECTION/DIMENSIONS

DODGE®



ULTRA KLEEN Mounted Bearings
SCEZ PSS NORMAL DUTY POLYMER HOUSED
4-BOLT FLANGE BEARINGS

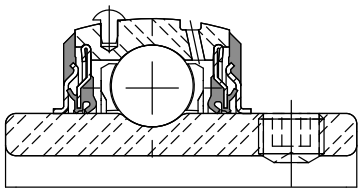

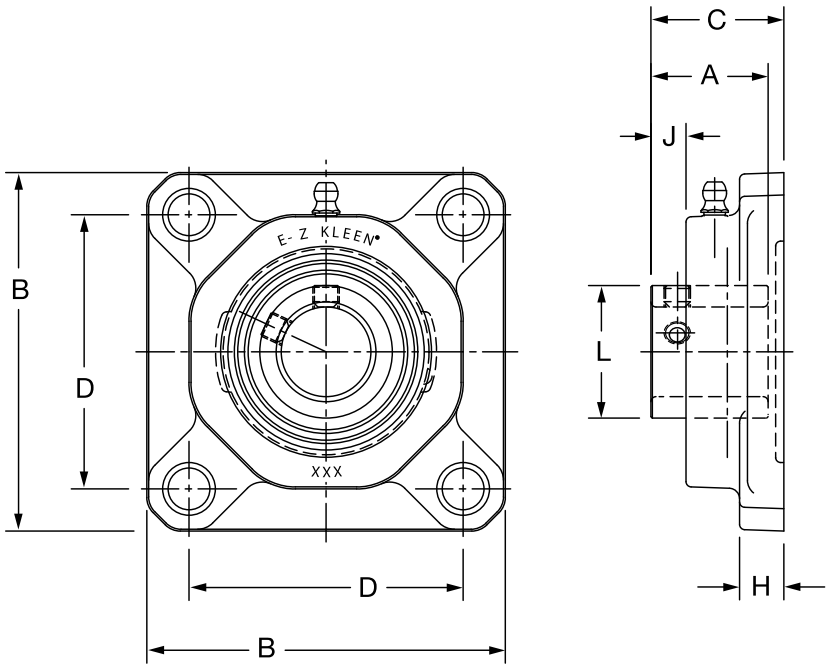

Series	Shaft Size	With Stainless Steel Insert		Weight lbs *kg*	A	B	C	D	F Bolt Dia.	H	J	L
		Part No.	Description									
204	3/4	**136725**	F4B-SCEZ-012-PSS	0.55	1.23	3.38	1.46	2.50	3/8	0.53	0.30	1.11
	20 mm	***136762***	*F4B-SCEZ-20M-PSS*	*0.27*	*31.2*	*85.9*	*37.0*	*63.5*	*M10*	*13.5*	*7.5*	*28.2*
205	1	**136726**	F4B-SCEZ-100-PSS	0.67	1.34	3.75	1.52	2.75	3/8	0.54	0.36	1.32
	25 mm	***136763***	*F4B-SCEZ-25M-PSS*	*0.32*	*34.0*	*95.3*	*38.6*	*69.9*	*M10*	*13.7*	*9.2*	*33.5*
206	1-3/16	**136727**	F4B-SCEZ-103-PSS	0.86	1.52	4.25	1.72	3.25	3/8	0.60	0.45	1.57
	1-1/4	**136728**	F4B-SCEZ-104S-PSS	0.84								
	30 mm	***136764***	*F4B-SCEZ-30M-PSS*	*0.39*	*38.6*	*108.0*	*43.7*	*82.6*	*M10*	*15.2*	*11.4*	*39.9*
207	1-1/4	**136729**	F4B-SCEZ-104-PSS	1.40	1.71	4.65	1.84	3.63	1/2	0.62	0.53	1.84
	1-7/16	**136730**	F4B-SCEZ-107-PSS	1.24								
	35 mm	***136765***	*F4B-SCEZ-35M-PSS*	*0.61*	*43.4*	*118.1*	*46.8*	*92.2*	*M12*	*15.7*	*13.5*	*46.7*
208	1-1/2	**136731**	F4B-SCEZ-108-PSS	1.82	1.94	5.12	2.10	4.00	1/2	0.67	0.62	2.05
	40 mm	***136766***	*F4B-SCEZ-40M-PSS*	*0.76*	*49.3*	*130.0*	*53.3*	*101.6*	*M12*	*17.0*	*15.7*	*52.1*
209	1-11/16	**136732**	F4B-SCEZ-111-PSS	2.00	1.94	5.38	2.10	4.13	9/16	0.72	0.62	2.22
	45 mm	***136767***	*F4B-SCEZ-45M-PSS*	*0.88*	*49.3*	*136.7*	*53.3*	*104.9*	*M14*	*18.3*	*15.7*	*56.4*
210	1-15/16	**136733**	F4B-SCEZ-115-PSS	2.12	1.94	5.62	2.24	4.38	5/8	0.76	0.63	2.43
	2	**136988**	F4B-SCEZ-200-PSS	2.03								
	50 mm	***136768***	*F4B-SCEZ-50M-PSS*	*0.96*	*49.3*	*142.7*	*56.8*	*111.3*	*M16*	*19.3*	*15.9*	*61.7*

DODGE®



ULTRA KLEEN Mounted Bearings
SCEZ SHSS NORMAL DUTY STAINLESS STEEL HOUSED 4-BOLT FLANGE BEARINGS

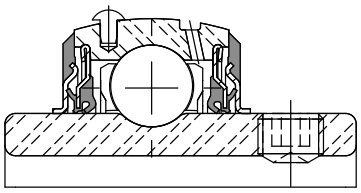

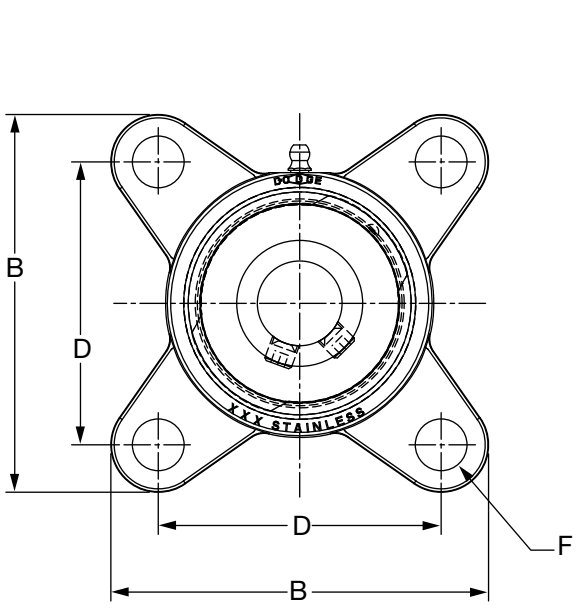

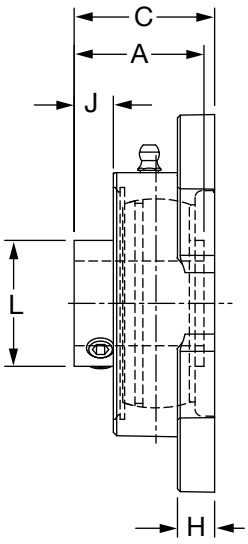

Series	Shaft Size	With Stainless Steel Insert		Weight lbs kg	A	B	C	D	F Bolt Dia.	H	J	L
		Part No.	Description									
204	3/4	**136825**	F4B-SCEZ-012-SHSS	1.08	1.23	3.35	1.25	2.51	3/8	0.34	0.34	1.11
	20 mm	***136885***	*F4B-SCEZ-20M-SHSS*	*0.49*	*31.2*	*85.1*	*31.7*	*63.8*	*M10*	*8.6*	*8.8*	*28.2*
205	1	**136826**	F4B-SCEZ-100-SHSS	1.39	1.34	3.75	1.37	2.75	3/8	0.37	0.38	1.32
	25 mm	***136886***	*F4B-SCEZ-25M-SHSS*	*0.63*	*34.0*	*95.3*	*34.7*	*69.9*	*M10*	*9.4*	*9.5*	*33.5*
206	1-3/16	**136827**	F4B-SCEZ-103-SHSS	2.09	1.52	4.16	1.59	3.24	3/8	0.37	0.45	1.57
	1-1/4	**136828**	F4B-SCEZ-104S-SHSS	2.05								
	30 mm	***136887***	*F4B-SCEZ-30M-SHSS*	*0.95*	*38.6*	*105.7*	*40.4*	*82.3*	*M10*	*9.4*	*11.4*	*39.9*
207	1-1/4	**136829**	F4B-SCEZ-104-SHSS	2.95	1.71	4.68	1.76	3.62	1/2	0.42	0.55	1.84
	1-7/16	**136830**	F4B-SCEZ-107-SHSS	2.78								
	35 mm	***136888***	*F4B-SCEZ-35M-SHSS*	*1.29*	*43.4*	*118.9*	*44.8*	*91.9*	*M12*	*10.7*	*13.9*	*46.7*
208	1-1/2	**136831**	F4B-SCEZ-108-SHSS	3.70	1.94	5.06	1.97	4.00	1/2	0.43	0.62	2.05
	40 mm	***136889***	*F4B-SCEZ-40M-SHSS*	*1.64*	*49.3*	*128.5*	*50.1*	*101.6*	*M12*	*10.9*	*15.7*	*52.1*
210	1-15/16	**136832**	F4B-SCEZ-115-SHSS	4.60	1.94	5.67	1.98	4.37	5/8	0.49	0.62	2.43
	2	**136993**	F4B-SCEZ-200-SHSS	4.56								
	50 mm	***136890***	*F4B-SCEZ-50M-SHSS*	*2.07*	*49.3*	*144.0*	*50.3*	*111.0*	*M16*	*12.4*	*15.7*	*61.7*

FEATURES/BENEFITS PAGE B1-3	HOW TO ORDER/NOMENCLATURE PAGE B1-6	EASY SELECTION PAGE B1-7	ACCESSORIES PAGE B1-35

SELECTION/DIMENSIONS

ULTRA KLEEN Mounted Bearings
SCEZ PSS NORMAL DUTY POLYMER HOUSED WIDE SLOT TAKE-UP BEARINGS

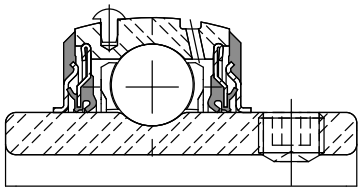

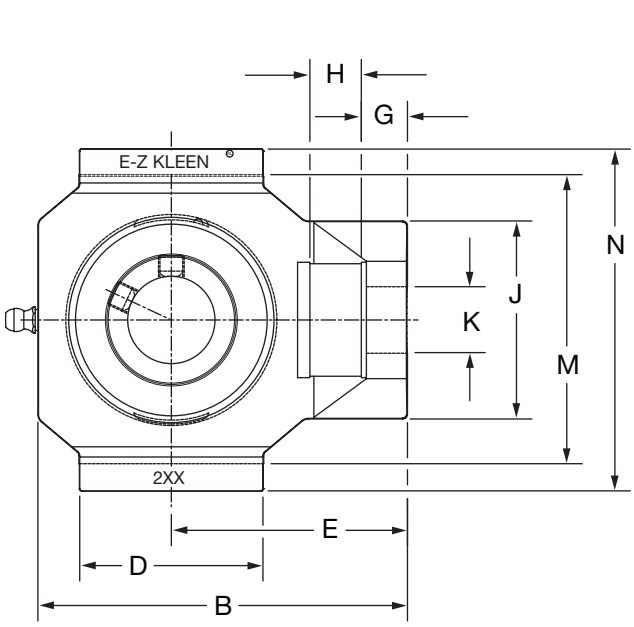

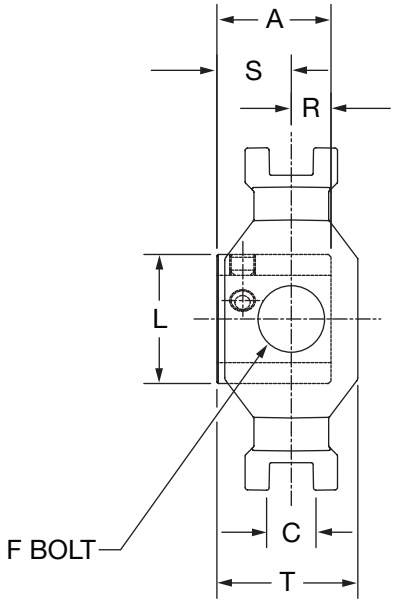

Series	Shaft Size	With Stainless Steel Insert	
		Part No.	Description
204	3/4	**136734**	WSTU-SCEZ-012-PSS
	20mm	***136769***	*WSTU-SCEZ-20M-PSS*
205	1	**136735**	WSTU-SCEZ-100-PSS
	25mm	***136770***	*WSTU-SCEZ-25M-PSS*
206	1-3/16	**136736**	WSTU-SCEZ-103-PSS
	1-1/4	***136737***	WSTU-SCEZ-104S-PSS
	30mm	***136771***	*WSTU-SCEZ-30M-PSS*
207	1-1/4	**136738**	WSTU-SCEZ-104-PSS
	1-7/16	**136739**	WSTU-SCEZ-107-PSS
	35mm	***136772***	*WSTU-SCEZ-35M-PSS*

DODGE®



ULTRA KLEEN Mounted Bearings

SCEZ PSS NORMAL DUTY POLYMER HOUSED WIDE SLOT TAKE-UP BEARINGS

Series	Shaft Size	Weight lbs kg	Take-Up Frame No. Ref.	A	B	C	D	E	F Thd Shaft	G
204	3/4	0.66	WS300	1.23	3.81	0.530	2.10	2.50	5/8	0.56
	20 mm	*0.31*		*31.2*	*96.8*	*13.46*	*53.3*	*63.5*	*15.9*	*14.2*
205	1	0.72	WS300	1.34	3.97	0.530	2.20	2.56	5/8	0.56
	25 mm	*0.34*		*34.0*	*100.8*	*13.46*	*55.9*	*65.0*	*15.9*	*14.2*
206	1-3/16			1.52	4.49	0.530	2.29	2.86	3/4	0.56
	1-1/4	1.07	WS308							
	30 mm	*0.49*		*38.6*	*114.0*	*13.46*	*58.2*	*72.6*	*19.1*	*14.2*
207	1-1/4	1.58		1.71	4.99	0.530	2.25	3.10	3/4	0.56
	1-7/16	1.42	WS308							
	35 mm	*0.69*		*43.4*	*126.7*	*13.46*	*57.2*	*78.7*	*19.1*	*14.2*

Series	Shaft Size	H	J	K	L	M	N	R	S	T
204	3/4	0.65	2.10	0.71	1.11	3.015/2.985	3.63	0.50	0.73	1.38
	20 mm	*16.5*	*53.3*	*18.0*	*28.2*	*76.58/75.82*	*92.2*	*12.7*	*18.5*	*35.1*
205	1	0.65	2.12	0.71	1.32	3.030/3.000	3.63	0.56	0.78	1.38
	25 mm	*16.5*	*53.8*	*18.0*	*33.5*	*76.96/76.20*	*92.2*	*14.2*	*19.8*	*35.1*
206	1-3/16	0.65	2.41	0.81	1.57	3.525/3.495	4.20	0.58	0.94	1.62
	1-1/4									
	30 mm	*16.5*	*61.2*	*20.6*	*39.9*	*89.54/88.77*	*106.7*	*14.7*	*23.9*	*41.1*
207	1-1/4	0.65	2.41	0.81	1.84	3.540/3.510	4.20	0.67	1.04	1.62
	1-7/16									
	35 mm	*16.5*	*61.2*	*20.6*	*46.7*	*89.93/89.15*	*106.7*	*17.0*	*26.4*	*41.1*

FEATURES/BENEFITS PAGE B1-3	HOW TO ORDER/NOMENCLATURE PAGE B1-6	EASY SELECTION PAGE B1-7	ACCESSORIES PAGE B1-35

SELECTION/DIMENSIONS

ULTRA KLEEN Mounted Bearings
SCEZ SHSS NORMAL DUTY STAINLESS STEEL HOUSED WIDE SLOT TAKE-UP BEARINGS

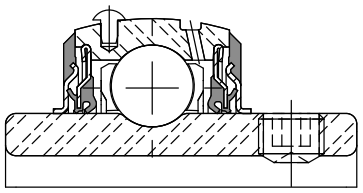

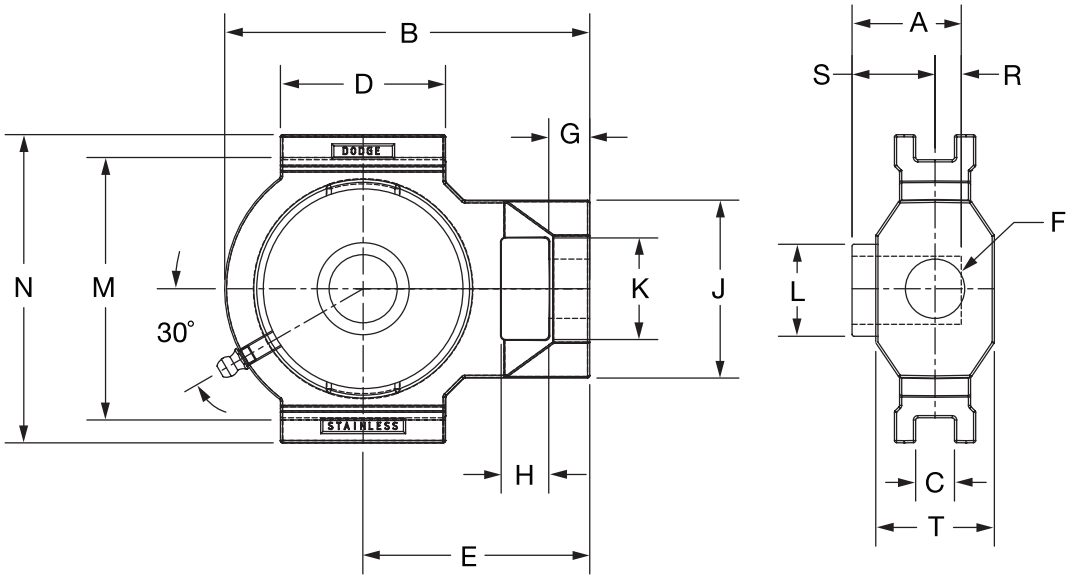

Series	Shaft Size	Standard	
		Part No.	Description
204	3/4	**136841**	WSTU-SCEZ-012-SHSS
	20mm	***136897***	*WSTU-SCEZ-20M-SHSS*
205	1	**136842**	WSTU-SCEZ-100-SHSS
	25mm	***136898***	*WSTU-SCEZ-25M-SHSS*
206	1-3/16	**136843**	WSTU-SCEZ-103-SHSS
	1-1/4	**136844**	WSTU-SCEZ-104S-SHSS
	30mm	***136899***	*WSTU-SCEZ-30M-SHSS*
207	1-1/4	**136845**	WSTU-SCEZ-104-SHSS
	1-7/16	**136846**	WSTU-SCEZ-107-SHSS
	35mm	***136900***	*WSTU-SCEZ-35M-SHSS*
208	1-1/2	**136847**	WSTU-SCEZ-108-SHSS
	40mm	***136901***	*WSTU-SCEZ-40M-SHSS*
210	1-15/16	**136848**	WSTU-SCEZ-115-SHSS
	2	**136995**	WSTU-SCEZ-200-SHSS
	50mm	***136902***	*WSTU-SCEZ-50M-SHSS*

DODGE®



ULTRA KLEEN Mounted Bearings

SCEZ SHSS NORMAL DUTY STAINLESS STEEL HOUSED WIDE SLOT TAKE-UP BEARINGS

Series	Shaft Size	Weight lbs. kg	Take-Up Frame No. Ref.	A	B	C	D	E	F Screw Dia	G
204	3/4	2.14	WS300	1.23	3.97	0.530	2.20	2.56	5/8	0.56
	20mm	*.97*		*31.2*	*100.8*	*13.46*	*55.9*	*65.0*	*15.9*	*14.2*
205	1	2.03	WS300	1.34	3.97	0.530	2.20	2.56	5/8	0.56
	25mm	*.92*		*34.0*	*100.8*	*13.46*	*55.9*	*65.0*	*15.9*	*14.2*
206	1-3/16	3.36	WS308	1.52	4.99	0.530	2.26	3.10	3/4	0.56
	1-1/4									
	30mm	*1.52*		*38.6*	*126.7*	*13.46*	*57.4*	*78.7*	*19.1*	*14.2*
207	1-1/4	3.21	WS308	1.71	4.99	0.530	2.26	3.10	3/4	0.56
	1-7/16									
	35mm	*1.46*		*43.4*	*126.7*	*13.46*	*57.4*	*78.7*	*19.1*	*14.2*
208	1-1/2	4.52	WS400	1.94	5.63	0.688	3.25	3.50	1	0.63
	40mm	*2.1*		*49.3*	*143.0*	*17.48*	*82.6*	*88.9*	*25.4*	*16.0*
210	1-15/16	4.03	WS400	1.94	5.63	0.688	3.25	3.50	1	0.63
	2									
	50mm	*1.83*		*49.3*	*143.0*	*17.48*	*82.6*	*88.9*	*25.4*	*16.0*

Series	Shaft Size	H	J	K	L	M	N	R	S	T
204	3/4	0.65	2.12	1.15	1.11	3.025/2.995	3.63	0.50	0.73	1.38
	20mm	*16.5*	*53.8*	*29.2*	*28.2*	*76.84/76.07*	*92.2*	*12.7*	*18.5*	*35.1*
205	1	0.65	2.12	1.15	1.32	3.025/2.995	3.63	0.56	0.78	1.38
	25mm	*16.5*	*53.8*	*29.2*	*33.5*	*76.84/76.07*	*92.2*	*14.2*	*19.8*	*35.1*
206	1-3/16	0.65	2.43	1.39	1.57	3.540/3.510	4.20	0.58	0.94	1.62
	1-1/4									
	30mm	*16.5*	*61.7*	*35.3*	*39.9*	*89.92/89.15*	*106.7*	*14.7*	*23.9*	*41.1*
207	1-1/4	0.65	2.43	1.39	1.84	3.540/3.510	4.20	0.67	1.04	1.62
	1-7/16									
	35mm	*16.5*	*61.7*	*35.3*	*46.7*	*89.92/89.15*	*106.7*	*17.0*	*26.4*	*41.1*
208	1-1/2	0.75	2.75	1.94	2.05	4.015/3.985	4.50	0.75	1.19	1.62
	40mm	*19.1*	*69.9*	*49.3*	*52.1*	*101.98/101.22*	*114.3*	*19.1*	*30.2*	*41.1*
210	1-15/16	0.75	2.75	1.94	2.43	4.015/3.985	4.50	0.75	1.19	1.62
	2									
	50mm	*19.1*	*69.9*	*49.3*	*61.7*	*101.98/101.22*	*114.3*	*19.1*	*30.2*	*41.1*

FEATURES/BENEFITS PAGE B1-3	HOW TO ORDER/NOMENCLATURE PAGE B1-6	EASY SELECTION PAGE B1-7	ACCESSORIES PAGE B1-35

SELECTION/DIMENSIONS

ULTRA KLEEN Mounted Bearings
SCEZ SHSS NORMAL DUTY STAINLESS STEEL HOUSED NARROW SLOT TAKE-UP BEARINGS

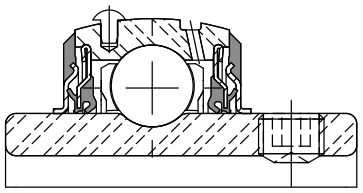

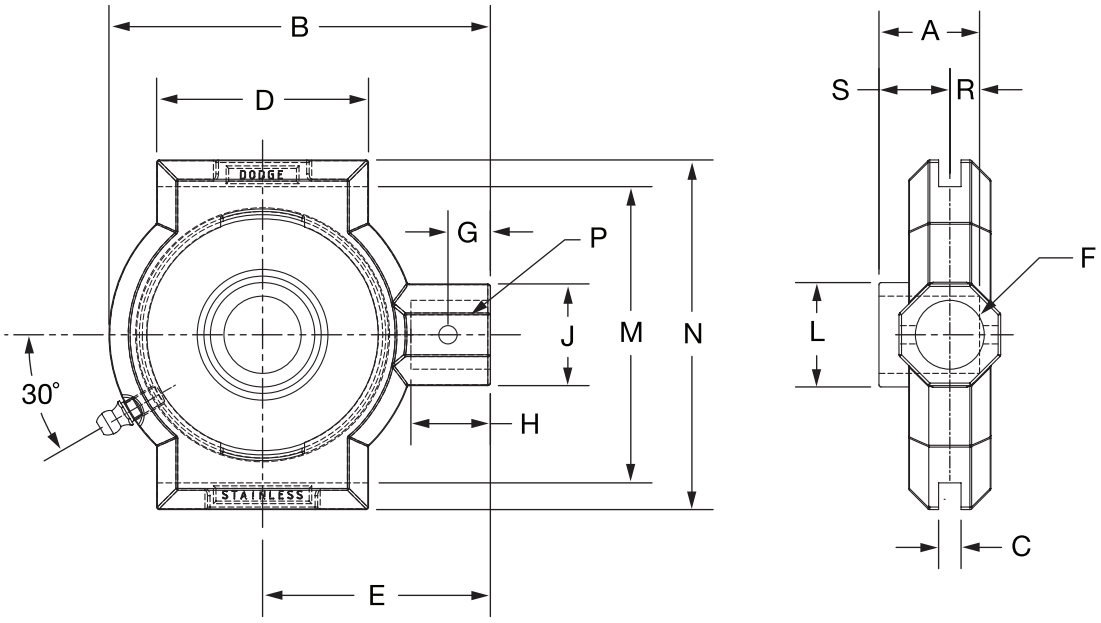

Series	Shaft Size	Standard	
		Part No.	Description
204S	3/4	**136833**	NSTU-SCEZ-012-SHSS
	20mm	***136891***	*NSTU-SCEZ-20M-SHSS*
205	1	**136834**	NSTU-SCEZ-100-SHSS
	25mm	***136892***	*NSTU-SCEZ-25M-SHSS*
206	1-3/16	**136835**	NSTU-SCEZ-103-SHSS
	1-1/4	**136836**	NSTU-SCEZ-104S-SHSS
	30mm	***136893***	*NSTU-SCEZ-30M-SHSS*
207	1-1/4	**136837**	NSTU-SCEZ-104-SHSS
	1-7/16	**136838**	NSTU-SCEZ-107-SHSS
	35mm	***136894***	*NSTU-SCEZ-35M-SHSS*
208	1-1/2	**136839**	NSTU-SCEZ-108-SHSS
	40mm	***136895***	*NSTU-SCEZ-40M-SHSS*
210	1-15/16	**136840**	NSTU-SCEZ-115-SHSS
	2	**136994**	NSTU-SCEZ-200-SHSS
	50mm	***136896***	*NSTU-SCEZ-50M-SHSS*

DODGE®



ULTRA KLEEN Mounted Bearings

SCEZ SHSS NORMAL DUTY STAINLESS STEEL HOUSED NARROW SLOT TAKE-UP BEARINGS

Series	Shaft Size	Weight lbs. kg	Take-Up Frame No. Ref.	A	B	C	D	E	F Screw Dia	G
204	3/4	1.16	NS210	1.23	3.49	0.265	1.50	2.19	3/4	0.44
	20mm	*.53*		*31.2*	*88.6*	*6.73*	*38.1*	*55.6*	*19.1*	*11.2*
205	1	1.06	NS210	1.34	3.49	0.265	1.50	2.19	3/4	0.44
	25mm	*.48*		*34.0*	*88.6*	*6.73*	*38.1*	*55.6*	*19.1*	*11.2*
206	1-3/16	2.51	NS308	1.52	4.50	0.265	2.50	2.69	3/4	0.50
	1-1/4									
	30mm	*1.14*		*38.6*	*114.3*	*6.73*	*63.5*	*68.3*	*19.1*	*12.7*
207	1-1/4	2.65	NS308	1.71	4.50	0.265	2.50	2.69	3/4	0.50
	1-7/16									
	35mm	*1.20*		*43.4*	*114.3*	*6.73*	*63.5*	*68.3*	*19.1*	*12.7*
208	1-1/2	4.08	NS400	1.94	5.38	0.328	3.00	3.25	1	0.66
	40mm	*1.85*		*49.3*	*136.7*	*8.33*	*76.2*	*82.6*	*25.4*	*16.8*
210	1-15/16	3.79	NS400	1.94	5.50	0.328	3.00	3.25	1	0.66
	2									
	50mm	*1.72*		*49.3*	*139.7*	*8.33*	*76.2*	*82.6*	*25.4*	*16.8*

Series	Shaft Size	H	J	L	M	N	Pin Dia	R	S
204	3/4	0.88	1.20	1.11	2.635/2.605	3.13	0.32	0.50	0.73
	20mm	*22.4*	*30.5*	*28.2*	*66.93/66.17*	*79.5*	*8.1*	*12.7*	*18.5*
205	1	0.88	1.20	1.32	2.635/2.605	3.13	0.32	0.56	0.78
	25mm	*22.4*	*30.5*	*33.5*	*66.93/66.17*	*79.5*	*8.1*	*14.2*	*19.8*
206	1-3/16	0.94	1.20	1.57	3.510/3.480	4.13	0.32	0.58	0.94
	1-1/4								
	30mm	*23.9*	*30.5*	*39.9*	*89.15/88.39*	*104.9*	*8.1*	*14.7*	*23.9*
207	1-1/4	0.94	1.20	1.84	3.510/3.480	4.13	0.32	0.67	1.04
	1-7/16								
	35mm	*23.9*	*30.5*	*46.7*	*89.15/88.39*	*104.9*	*8.1*	*17.0*	*26.4*
208	1-1/2	1.16	1.50	2.05	4.015/3.985	4.75	0.38	0.75	1.19
	40mm	*29.5*	*38.1*	*52.1*	*101.98/101.22*	*120.7*	*9.7*	*19.1*	*30.2*
210	1-15/16	1.16	1.50	2.43	4.015/3.985	4.75	0.38	0.75	1.19
	2								
	50mm	*29.5*	*38.1*	*61.7*	*101.98/101.22*	*120.7*	*9.7*	*19.1*	*30.2*

Bearing Reference Guide
ULTRA KLEEN
E-Z KLEEN
Extreme Duty
Setscrew Ball Bearing
GRIP TIGHT
D-LOK Ball Bearing

SELECTION/DIMENSIONS

ULTRA KLEEN Mounted Bearings

SC NORMAL DUTY BEARING STAINLESS STEEL INSERTS FOR ULTRA KLEEN BEARINGS

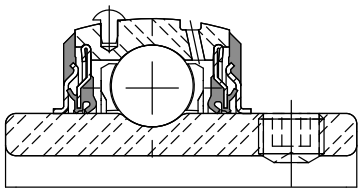

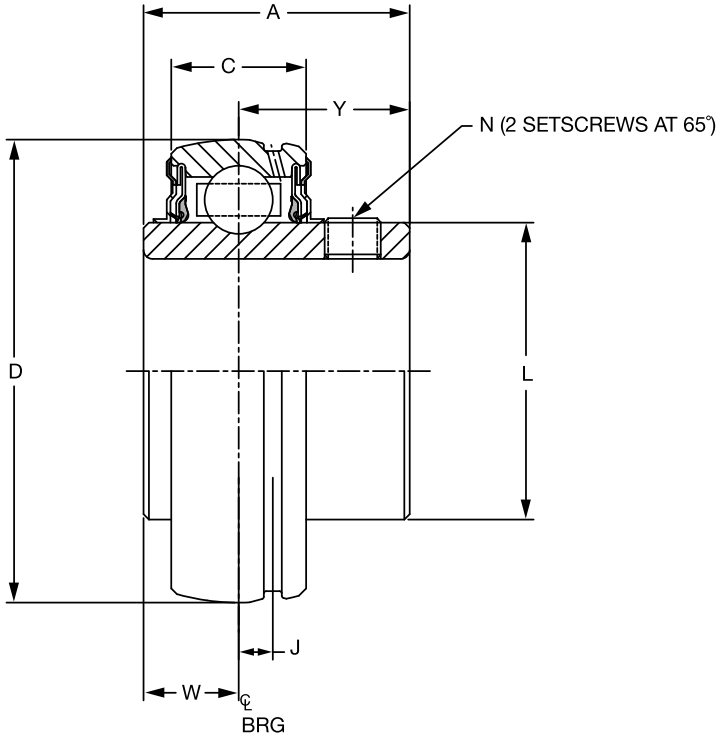

Series	Shaft Size	Stainless Steel Insert Part No.	Stainless Steel Insert Description	Weight lbs *kg*	A	C	D	J	L	N	W	Y
204	3/4	**127818**	INS-SC-012-SS	.32	1.23	0.58	1.8504	0.15	1.11	1/4-28	0.50	0.73
	20mm	***127861***	*INS-SC-20M-SS*	*.16*	*31.2*	*14.7*	*47.000*	*3.8*	*28.3*	*M6x1*	*12.7*	*18.5*
205	1	**127819**	INS-SC-100-SS	.37	1.34	0.59	2.0472	0.15	1.32	1/4-28	0.56	0.78
	25mm	***127862***	*INS-SC-25M-SS*	*.18*	*34.0*	*15.0*	*52.000*	*3.8*	*33.5*	*M6x1*	*14.2*	*19.8*
206	1-3/16	**127820**	INS-SC-103-SS	.60	1.52	0.69	2.4409	0.18	1.57	5/16-24	0.58	0.94
	1-1/4	**127821**	INS-SC-104S-SS	.58								
	30mm	***127863***	*INS-SC-30M-SS*	*.27*	*38.6*	*17.6*	*62.000*	*4.6*	*39.9*	*M8x1.25*	*14.7*	*23.9*
207	1-1/4	**127822**	INS-SC-104-SS	1.02	1.71	0.75	2.8346	0.20	1.84	5/16-24	0.67	1.04
	1-7/16	**127823**	INS-SC-107-SS	.86								
	35mm	***127864***	*INS-SC-35M-SS*	*.44*	*43.4*	*19.0*	*72.000*	*5.1*	*46.7*	*M8x1.25*	*17.0*	*26.4*
208	1-1/2	**127824**	INS-SC-108-SS	1.27	1.94	0.87	3.1496	0.22	2.05	5/16-24	0.75	1.19
	40mm	***127865***	*INS-SC-40M-SS*	*.51*	*49.3*	*22.0*	*80.000*	*5.6*	*52.1*	*M8x1.25*	*19.1*	*30.2*
209	1-11/16	**127825**	INS-SC-111-SS	1.43	1.94	0.87	3.3465	0.25	2.22	5/16-24	0.75	1.19
	1-3/4	**127804**	INS-SC-112-SS	1.43								
	45mm	***127866***	*INS-SC-45M-SS*	*.62*	*49.3*	*22.0*	*85.000*	*6.4*	*56.4*	*M8x1.25*	*19.1*	*30.2*
210	1-15/16	**127826**	INS-SC-115-SS	1.48	1.94	0.87	3.5433	0.25	2.43	3/8-24	0.75	1.19
	2	**127808**	INS-SC-200-SS	1.39								
	50mm	***127867***	*INS-SC-50M-SS*	*.67*	*49.3*	*22.0*	*90.000*	*6.4*	*61.7*	*M10x1.5*	*19.1*	*30.2*



E-Z KLEEN/ULTRA KLEEN Mounted Bearings
Polymer and Stainless Steel Housed Mounted Bearings
END CLOSURES

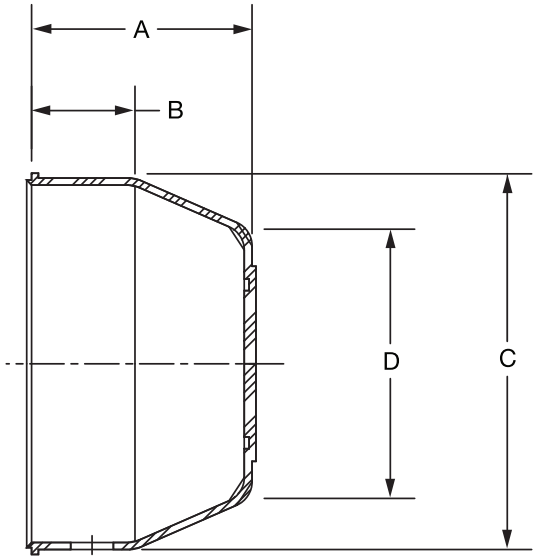

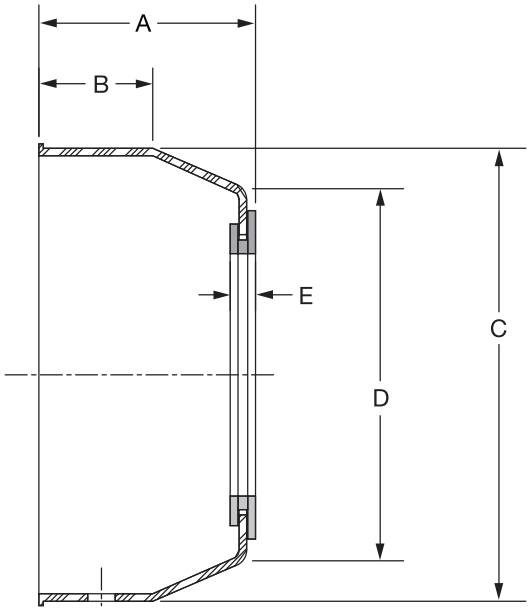

Series	For Shaft Size	Closed End Closure Part Number	Description	A	B	C	D	Open End Closure Part Number	Description	A	B	C	D	E
204	3/4	**128960**	ECC-EZ-204	1.13	0.53	1-29/32	1-3/8	**128974**	ECO-EZ-012	1-3/16	17/32	1-29/32	1-3/8	3/16
	20mm			*28.7*	*13.5*	*48.4*	*35.1*	***128991***	*ECO-EZ-20M*	*30.2*	*13.5*	*48.4*	*35.1*	*4.9*
205	1	**128961**	ECC-EZ-205	0.19	17/32	2-11/64	1-39/64	**128975**	ECO-EZ-100	1-1/4	17/32	2-11/64	1-39/64	3/16
	25mm			*30.2*	*13.5*	*55.1*	*40.9*	***128992***	*ECO-EZ-25M*	*35.3*	*14.2*	*63.5*	*50.0*	*4.9*
206	1-3/16 1-1/4	**128962**	ECC-EZ-206	1.33	9/16	2-1/2	31/32	**128976** **128989**	ECO-EZ-103 ECO-EZ-104S	1-25/64	9/16	2-1/2	31/32	3/16
	30mm			*33.8*	*14.2*	*63.5*	*50.0*	***128993***	*ECO-EZ-30M*	*35.3*	*14.2*	*63.5*	*50.0*	*4.9*
207	1-1/4 1-7/16	**128963**	ECC-EZ-207	1.47	11/16	2-29/32	2-5/16	**128977** **128990**	ECO-EZ-104 ECO-EZ-107	1-17/32	11/16	2-29/32	2-5/16	3/16
	35mm			*37.3*	*17.5*	*73.9*	*58.9*	***128994***	*ECO-EZ-35M*	*38.9*	*17.5*	*73.9*	*58.9*	*4.9*
208	1-1/2	**128964**	ECC-EZ-208	1.55	11/16	3-5/16	2-49/64	**128978**	ECO-EZ-108	1-19/32	11/16	3-5/16	2-49/64	13/64
	40mm			*39.1*	*17.5*	*84.1*	*70.1*	***128996***	*ECO-EZ-40M*	*40.6*	*17.5*	*84.1*	*70.1*	*5.1*
209	1-11/16 1-3/4	**128965**	ECC-EZ-209	1.59	23/32	3-1/2	2-7/8	**@**	ECO-EZ-111	1-21/32	23/32	3-1/2	2-7/8	13/64
	45mm			*40.4*	*18.3*	*88.9*	*72.9*	*@*	*ECO-EZ-45M*	*41.9*	*18.3*	*88.9*	*72.9*	*5.1*
210	1-15/16 2	**128966**	ECC-EZ-210	1.66	29/32	3-5/8	3	**128980**	ECO-EZ-115	1-23/32	29/32	3-5/8	3	13/64
	50mm			*42.0*	*23.1*	*91.4*	*76.2*	***128997***	*ECO-EZ-50M*	*43.7*	*23.1*	*91.4*	*76.2*	*5.1*

@ Made to order

FEATURES/BENEFITS PAGE B1-3	HOW TO ORDER/NOMENCLATURE PAGE B1-6	EASY SELECTION PAGE B1-6	DIMENSIONS PAGE B1-16

NOTES



CONTENTS

E-Z KLEEN Polymer and Stainless Steel Housed Mounted Bearings

Features / Benefits B2-3
How to Order / Nomenclature B2-8
Selection B2-9
Easy Selection B2-12
Selection/Dimensions
- Stainless Housed Ball
  - Pillow Blocks B2-24
  - Tapped Base Pillow Block B2-29
  - 2-Bolt Flange Bearings B2-30
  - LF, LFT Flange Bearings B2-33
  - Flanged Bracketed Bearings B2-35
  - 4-Bolt Flange Bearings B2-36
  - NSTU Narrow Slot Take-Up Bearings B2-38
  - Wide Slot Take-Up Bearings B2-39
  - CR Inserts B2-40
- Polymer Housed Ball
  - Pillow Blocks B2-44
  - Tapped Base Pillow Blocks B2-50
  - 2-Bolt Flange Bearings B2-54
  - Flange Bearings B2-58
  - 4-Bolt Flange Bearings B2-62
  - Wide Slot Take-Up Bearings B2-66
- Polymer Sleeve
  - Pillow Block B2-71
  - Tapped Base Pillow Blocks B2-72
  - 2-Bolt Flange Bearings B2-73
  - 3-Bolt Flange Bearings B2-74
  - 4-Bolt Flange Bearings B2-75
  - Inserts B2-76

Accessories B2-77
Part Number Index INDEX-1
Key Word Index INDEX-69

CONTENTS

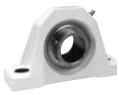

FEATURES/BENEFITS

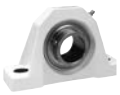

E-Z KLEEN

Polymer and Stainless Steel Housed Mounted Bearings

Our goal at DODGE is to create the world's most successful customer. We do that by listening and responding to our customers' needs. Customers in the food and beverage processing industry told us they needed new and improved products that help make their industry safer - products that help in the fight against contamination from bacteria such as E. coli, salmonella, and staphylococcus aureus.

DODGE delivered by expanding our high performance E-Z KLEEN line with this new, improved generation of E-Z KLEEN engineered polymer housed ball and sleeve bearings and stainless steel housed ball bearings.



- 300 Series Stainless Steel



DODGE E-Z KLEEN with solid-base housing

Competitive bearing with cavities and fillings that can trap bacteria



POPULAR HOUSING STYLES

Polymer	Stainless Steel
• Pillow blocks	• Pillow blocks
• Tapped-base pillow blocks	• Tapped-base pillow blocks
• 2 and 4 bolt flange bearings	• Flange brackets
• Flange brackets	• Wide and narrow slot take-up bearings
• Wide slot take-up bearings	• 2 and 3 bolt light duty flange
	• 2 and 4 bolt flange bearings

RUGGED, SOLID-BASE HOUSING

- Manufactured with no cavities and no fillings -no traps for bacteria
- Features anti-microbial polymer that helps prevent bacterial and fungal growth (polymer housing)
- Housing strength exceeds static capacity of bearing
- Designed with stainless steel lube fittings and stainless steel ferrules in bolt holes (polymer housed)
- 316 Series stainless steel housing also available
- For no relube (NL) remove the lube fitting and install the polymer plug that is shipped with each bearing
- Retains dimensional stability in harsh environments
- No flaking or peeling, even after repeated washdowns
- Provides excellent chemical resistance
- Available with either open or closed end closures
- FDA/USDA compliant

RESULTS OF HOUSING ANTI-MICROBIAL ACTIVITY AGAINST TEST ORGANISMS

Test Organism	Type of Organism	Growth-Free Zone (MM)	Contact Inhibition (%)
Staphylococcus aureus	Bacterial	0	100
Aspergillus niger	Fungal	0	100

FEATURES/BENEFITS

E-Z KLEEN
QuadGuard Sealing System

For over 125 years, the DODGE brand has been synonymous with the best the industry has to offer. Bearing users in the food and beverage industry recognize that with DODGE they have access to the best selection of the highest quality mounted ball bearings available in the market.

The DODGE E-Z KLEEN and ULTRA KLEEN bearings for the food and beverage industry offer an array of features that provide extended life in these challenging conditions. DODGE has the only bearings in the industry to offer a patented triple-lip seal with a rubberized flinger, the QuadGuard™ sealing system. These units also include an exclusive ball retainer, the Maxlife™ cage which helps retain lubrication and prevents washout in wet environments.

Combine these features with a complete line of polymer and stainless housing offerings, concentric and adapter mounting options and you have a family of mounted ball bearing products that are unsurpassed in the industry.

THREE SHAFT LOCKING SYSTEMS FROM STOCK

- SC - Two stainless-steel setscrews set 65 apart
- D-LOK - Corrosion resistant concentric collar
- GT - GRIP TIGHT

DODGE
QuadGuard Sealing System

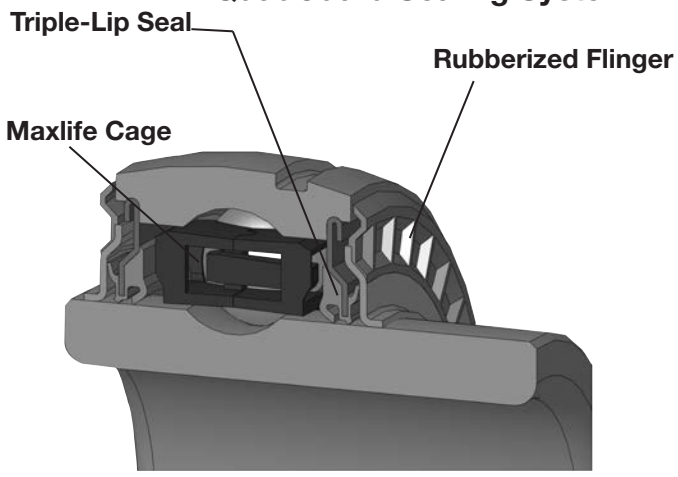

CORROSION-RESISTANT BALL BEARING INSERTS

- New QuadGuard sealing system with stainless triple-lip seal and rubberized flinger
- Corrosion-resistant inner and outer ring
- Stainless steel balls and lube fitting
- Stainless steel setscrews (SC) and stainless steel capscrew (DLOK)
- 100% Filled with H1, food grade grease
- Relubricable
- Anti-rotation pin
- Patented Maxlife cage extends grease life
- Offered in inch and metric sizes
- Temperature range -20° to +225° F

The QuadGuard seal consists of two patented features that are unique to DODGE bearings and are standard on the E-Z KLEEN and ULTRA KLEEN product.

- **Triple-lip seal**
  - Patented design
  - Mechanically retained seal with two contact points on the inner ring and one that rides against flinger surface
  - Three points of contact guard against contamination and keep in lubricants
  - Maximizes sealing with minimal increase in drag compared to a single lip design

- **Rubberized flinger**
  - Industry's first and only patented design
  - Molded rubber provides additional protection from contaminants entering the bearing
  - Baffle design of the rubber on the external surface of the flinger enhances the removal of liquid as it rotates
  - Extended rubber baffle outer diameter increases centrifugal acceleration to discard moisture and contamination away from bearing
  - Grease chambers on the internal surface prevent lubricants from exiting the bearing
  - Superior design increases service life in dirty environments thus leading to extended uptime

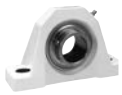

E-Z KLEEN
Corrosion Resistant Coating

The DODGE E-Z KLEEN ball bearing uses a patented, corrosion resistant coating that is superior to any coated product in the market.

- QuadGuard sealing system
- Maxlife cage
- Corrosion resistant insert has a patented nickel alloy Teflon composite coating
- Offered in setscrew (SC), concentric (D-LOK), and adapter mount (GRIP TIGHT) locking mechanisms
- Available in polymer and stainless housings

The DODGE E-Z KLEEN corrosion resistant (CR) insert out performs other coatings on the market today such as black oxide, zinc and thin dense chrome (TDC).

Tests have shown that the DODGE CR insert exhibited 300% longer bearing life than a typical TDC coated insert. The CR insert load capacity is not de-rated as compared to stainless inserts.

DODGE offers the CR insert in three patented locking mechanisms.

- Setscrew (SC)
  - 65° stainless set screws provide superior holding force without compromising the strength of the inner ring
  - Stainless anti-rotation pin to prevent insert from rotating in the housing
- Concentric (D-LOK)
  - Concentric locking accomplished with the use of a locking collar and slotted inner ring
  - Eliminates damage to stainless shafting caused by set screws
  - Reduced vibration as compared to set screws
- Adapter Mount (GRIP TIGHT)
  - DODGE-only patented thin wall adapter mount
  - Push/pull adapter mount system provides easy on/ easy off installation and removal
  - Built-in bearing puller reduces the time associated with removing bearings from shaft
  - Adapter mount does not damage stainless shafting
  - Interchangeable adapters reduce inventory

NOTE: Instruction manuals and drawings for Dodge Bearings are available on www.dodge-pt.com

24 Hour Salt Fog Test Results

DODGE E-Z KLEEN Corrosion Resistant Insert – No corrosion after testing





Black Oxide



Zinc Plating



Thin Dense Chrome (TDC)



SC



D-LOK



GRIP TIGHT

FEATURES/BENEFITS

E-Z KLEEN

Maxlife Cage

The Maxlife cage is the product of extensive research and development in retainer technology and industry leading engineering.

- Two-piece design that creates a grease compartment around each of the rolling elements
- Compartments provide constant contact between balls and grease so an oil film will always exist to prevent wear and minimize friction and heat
- Relative motion between the components and the grease is reduced which results in lower operating temperatures and extended life
- Compartmental construction of the cage holds in the grease and prevents it from being washed out in extremely wet conditions
- Exclusive design extends life with less frequency of re-lubrication than standard designs
- Included in both E-Z KLEEN and ULTRA KLEEN products





D-LOK DL

Dodge E-Z KLEEN bearings are available with the D-LOK concentric locking device that provides easy installation and 360˚ contact with the shaft.



GRIP-TIGHT LOCKING SYSTEM

Full Contact on shaft for better grip, less vibration.

Setscrew locking can distort the inner ring and cause system-induced vibration. But with the DODGE GRIP-TIGHT adapter, the adapter attaches itself to the shaft for full concentric contact - 360° through the length of the bearing. E-Z KLEEN and GRIP-TIGHT use stainless steel adapter sleeve and nut and provides easy-on and easy-off installation and removal.

NOTE: Instruction manuals and drawings for Dodge Bearings are available on www.dodge-pt.com

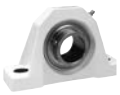

E-Z KLEEN-SC, DL, GT; ULTRA KLEEN-SC

EZ Kleen-SC, DL, GT Ultra Kleen-SC	End-Cover Capability		Sealing		Retainer
	End-Cover Groove	Snap-On End Cover	Triple-Lip Seal	Stainless Rubberized Flinger	Maxlife Cage
Standard Features	X	X	X	X	X

Housing Capability Stainless							
Housing Style	**204**	**205**	**206**	**207**	**208**	**209**	**210**
P2B	X	X	X	X	X		X
F2B	X	X	X	X	X		X
F4B	X	X	X	X	X		X
FB	X	X	X	X			X
TB	X	X	X	X	X		X
NSTU	X	X	X	X	X		X
WSTU	X	X	X	X	X		X
LF	X	X	X	X			
LFT	X	X	X	X			

Housing Capability Polymer							
Housing Style	**204**	**205**	**206**	**207**	**208**	**209**	**210**
P2B	X	X	X	X	X	X	X
F2B	X	X	X	X	X	X	X
F4B	X	X	X	X	X	X	X
FB	X	X	X	X			
TB	X	X	X	X			
NSTU							
WSTU	X	X	X	X			
LF							
LFT							

NOTE: Instruction manuals and drawings for Dodge Bearings are available on www.dodge-pt.com

HOW TO ORDER/NOMENCLATURE



E-Z KLEEN Polymer and Stainless Steel Housed Mounted Bearings

HOW TO ORDER

There are two ways to specify DODGE E-Z KLEEN ball bearings. Most of the product offerings have part numbers with listings shown throughout this catalog. Use of part numbers ensures accurate order processing.

When part numbers are not shown, the product may be specified by description or part name. This method is used when ordering units that include modifications or options.

NOMENCLATURE

P2B - SCHUEZ - 104S = PCR

Modification Or Feature:
- CR = Corrosion resistant insert
- MOD = Modified
- P = Polymer housing
- SH = Stainless Steel Housing

Shaft Size:

Inches:
- First digit = Number of inches
- Second & third digits = Number of sixteenths of an inch
  - 104 = Indicates 1-4/16 or 1-1/4
- S = Next smaller ring size. E.g. 1-1/4 206 would be written as 104S
- L = Next larger ring size. E.g. 1/2 204 would be written as 008L

Metric:
- First two digits = number of millimeters
- M = Metric

Bearing Type:
- SC = Wide inner ring, normal duty, 65° setscrew locking
- DL = Wide inner ring, normal duty, concentric clamp collar
- GT = Wide inner ring, normal duty, thin wall adapter locking
- PS = Polymer Sleeve Insert

Suffixes to the above:
- EZ = E-Z KLEEN/ULTRA KLEEN (used with polymer or stainless steel housed units)
- BEZ = Low backing height pillow block, E-Z KLEEN/ULTRA KLEEN
- UEZ = higher back pillow block, E-Z KLEEN/ULTRA KLEEN (for interchangeability with competitive pillow blocks)

Housing:
- F2B = 2-bolt flange
- F4B = 4-bolt flange
- FB = Flanged bracket
- INS = Insert
- P2B = Pillow block, 2-bolt base
- TB = Tapped base pillow block
- WSTU = Wide slot take-up



Selection of DODGE E-Z KLEEN Polymer and Stainless Steel Housed Ball Bearings

DODGE E-Z KLEEN mounted ball bearings are primarily designed for radial loading. However, they have the capacity to carry thrust loads and combined radial/thrust loads. The maximum recommended load which can be applied is limited by various components in the system, such as bearing, housing, shaft attachments, speed and life requirements as listed in this catalog and the instruction manual that accompanies each bearing. DODGE E-Z KLEEN ball bearings have been applied successfully when these limits have been exceeded under controlled operating conditions. Contact DODGE Engineering for applications which exceed these recommendations.

Select a bearing from the Selection Table that has a radial load rating at the operating speed equal to or greater than the calculated Equivalent Radial Load for a desired L_{10} life. This simple method is all that is required for the majority of general applications and provides for occasional average shock loads.

L_{10} Hours Life – The life which may be expected for at least 90% of a given group of bearings operating under identical conditions.

Heavy Service – For heavy shock loads, frequent shock loads or severe vibrations, add up to 50% (according to severity of conditions) to the Equivalent Radial Load to obtain a Modified Equivalent Radial Load. Consult Application Engineering for additional selection assistance.

A maximum thrust load value of C/10 is recommended as a guide for general applications and will give adequate L_{10} life. If the thrust load exceeds this limit, it is advisable to use auxiliary thrust carrying devices, such as a shaft shoulder, snap ring, or a thrust collar. Where substantial radial load pulls the housing away from the mounting base, both the hold-down bolts and housing must be of adequate strength. Auxiliary load carrying devices, such as shear bars, are advisable for side or end-loading of pillow blocks and radial loads for flange units.

To determine the L_{10} hours life for loads and RPMs not listed use the following equation:

$$L_{10} = \left(\frac{C}{P}\right)^3 x \left(\frac{16667}{n}\right)$$

Where:

L_{10}= Life, hours

C = Dynamic Capacity, lbs. or N

P = Equivalent Radial Load, lbs. or N

n = Revolutions per minute

When the load on a ball bearing is solely a radial load with no thrust (axial) load, the Equivalent Radial Load (P) is equal to the actual radial load. However, when a thrust (axial) load is applied, the radial and thrust loads applied must be converted into an Equivalent Radial Load. Use X (radial factor) and Y (thrust factor) from Table 1 to convert the actual applied thrust and radial loads to an Equivalent Radial Load which has the same effect on the life of a bearing as a radial load of this magnitude.

$P = XF_R + YF_A$
Where:

P = Equivalent Radial Load, lbs.
F_R= Radial load, lbs.
F_A= Thrust load, lbs.
e = Thrust load to radial load factor (Table 1)
X = Radial load factor (Table 1)
Y = Thrust Factor (Table 1)
C_0= Basic static capacity (Selection Table)

To find X and Y, first calculate F_A/C_0 to determine e. Calculate F_A/F_R and compare to e to determine the X and Y factors to use from Table 1.

Shaft Tolerances

Normal Shaft Size Inches	Recommended Shaft Tolerances SC & D-LOK Products (Inches)	Recommended Shaft Tolerances GRIP TIGHT Ball Bearings (Inches)
Up to 1-1/2”	+0.000 -.0005	+0.000 -0.002
Over 1-1/2 to 2”	+0.000 -.0010	+0.000 -.0.003

NOTE: Bearing analysis program “BEST” is available on www.ptwizard.com

SELECTION



Selection of DODGE E-Z KLEEN Polymer and Stainless Steel Housed Ball Bearings

Table 1

F_A/C_o	e	Radial/Thrust Factors			
		If F_A/F_R is equal to or less than e		If F_A/F_R is greater than e	
		$F_A/F_R \leq e$		$F_A/F_R > e$	
		X	Y	X	Y
0.014	0.19	1	0	0.56	2.30
0.021	0.21	1	0	0.56	2.15
0.028	0.22	1	0	0.56	1.99
0.042	0.24	1	0	0.56	1.85
0.056	0.26	1	0	0.56	1.71
0.070	0.27	1	0	0.56	1.63
0.084	0.28	1	0	0.56	1.55
0.110	0.30	1	0	0.56	1.45
0.170	0.34	1	0	0.56	1.31
0.280	0.38	1	0	0.56	1.15
0.420	0.42	1	0	0.56	1.04
0.560	0.44	1	0	0.56	1.00

Substitute all known values into the Equivalent Radial Load equation. The Equivalent Radial Load (P) thus determined can be used in the L10 life formula or compared to the allowable Equivalent Radial Load rating desired in the expanded rating chart to select a bearing (Selection Table).

If calculated value of P is less than F_R, use $P=F_R$.

Lubrication – DODGE Ball Bearings are lubricated at the factory and are ready to run. The bearings are initially lubricated with an aluminum complex based, H1 Food Grade grease and should be relubricated with the same or some equivalent. For high speeds, high loads, extreme temperatures and other abnormal operating conditions, special greases may be required. Contact DODGE Application Engineering for recommendations on these types of applications.

Misalignment – DODGE Ball Bearings are designed to allow a maximum of 2° static misalignment. These bearings are not suitable for dynamic misalignment. To ensure good alignment, mounting surfaces must be checked for flatness and must lie in the same plane. When tightening base bolts, each bolt should be alternately tightening in incremental torque values until full torque is achieved to prevent the angular shifting of the pillow block that occurs when one bolt is tightened to its full torque. Shimming may be required to minimize misalignment.

NOTE: Bearing analysis program "BEST" is available on www.ptwizard.com



Selection of DODGE E-Z KLEEN Polymer and Stainless Steel Housed Ball Bearings

Recommended Torque													
Setscrews					D-LOK			Mounting Bolts					
		◆ Recommended Torque						Metal Housings		EZ-KLEEN Housed Bearings			
Setscrew Size	Key Hex Across Flats	Standard Ball Bearing Insert		Corrosion Resistant Stainless Steel	Cap Screw Size	Recom. Torque	EZ-KLEEN Recom. Torque	Bolt Size	Recom. Dry Torque (Grade 2)	2-Bolt PB, 2 & 4 Bolt Fig. and Fig. Brackets		Tapped Base PB	
		Min	Max							Bolt Size	Torque ①	Bolt Size	Torque ②
(in.)	(in.)	(in-lbs.)	(in.-lbs.)	(in.-lbs.)	(in.)	(in.0lbs.)	(in.-lbs.)	(in.)	(in.0lbs.)	(in.)	(in.-lbs.)	(in.)	(in.lbs.)
#10	3/32	28	33	25	#8-32	58	46	3/8-16	240	3/8-16	225	3/8-16	175
1/4	1/8	66	80	60	#10-32	90	72	7/16-14	384	7/16-14	350	7/16-14	350
5/16	5/32	126	156	117	1/4-28	180	144	1/2-13	600	1/2-13	500	1/2-13	400
3/8	3/16	228	275	206	5/16-24	400	320	5/8-11	1200	9/16-12	650		
7/16	7/32	342	428	321	3/8-24	750	600	3/4-10	1950	5/8-11	1000		
								7/8-9	2890				
(mm)	(mm)	(N-m)	(N-m)	(N-m)	(mm)	(N-m)	(N-m)	(mm)	(N-m)	(mm)	(N-m)	①Torque for Austenitic (18-8) Stainless ②Max. torque values published. Do not exceed	
M5	2.5	3.2	3.7	2.8	M4	585	4.68	M10	29	M8	15		
M6	3	6.2	7.7	5.8	M5	10.75	8.6	M12	50	M10	25		
M8	4	14.2	17.8	13.4	M6	20.5	16.4	M16	124	M12	50		
M10	5	26	31	23	M8	45	36	M20	238	M14	75		
M12	6	46	57	43				M22	322	M18	125		

Lubrication

High Speed Operation - In the higher speed ranges, too much grease will cause over-heating. The amount of grease that the bearing will take for a particular high speed application can only be determined by experience. If excess grease in the bearing causes overheating, it will be necessary to remove grease fitting to permit excess grease to escape. The bearing has been greased at the factory and is ready to run. When establishing a relubrication schedule, note that a small amount of grease at frequent intervals is preferable to a large amount at infrequent intervals.

◆ **NOTE:** Dodge does not recommend the use of oils or locking agents on setscrew threads. However, if utilized, the the minimum installation torque values should be followed.

Lubrication Guide

Use a No. 2 Lithium complex base grease or equivalent*

Hours Run per Day	Suggested Lubrication Period in Weeks							
	1 to 250 RPM	251 to 500 RPM	501 to 750 RPM	751 to 1000 RPM	1001 to 1500 RPM	1501 to 2000 RPM	2001 to 2500 RPM	2501 to 3000 RPM
8	12	12	10	7	5	4	3	2
16	12	7	5	4	2	2	1	1
24	10	5	3	2	1	1	1	1

* For EZ-KLEEN series bearings, use an aluminum complex base grease.

Lubrication recommendations are intended for standard products applied in general operating conditions. For modified products, high temperature applications, and other anomalous applications contact product engineering at 864-284-5700.

EASY SELECTION

DODGE®



E-Z KLEEN SC and DL

Ring Size	Shaft Size		Dynamic Capacity C, lbs.	Static Capacity C_0, lbs.	L_{10} Life - Hours	Allowable Equivalent Radial Load Rating (lbs.) at Various RPM*											
	SC	SCM				50	150	250	500	750	1000	1250	1500	1600	1750	2000	2250
204	1/2 5/8 3/4 13/16 20mm		2899	1482	20000	741	513	433	344	300	273	253	238	233	226	217	208
					30000	647	449	378	300	262	238	221	208	204	198	189	182
					40000	588	408	344	273	238	217	201	189	185	180	172	165
					60000	513	356	300	238	208	189	176	165	162	157	150	144
					100000	433	300	253	201	176	160	148	139	136	132	127	122
205	7/8 15/16 1 25mm		3146	1769	20000	804	557	470	373	326	296	275	259	253	246	235	226
					30000	702	487	411	326	285	259	240	226	221	215	205	197
					40000	638	442	373	296	259	235	218	205	201	195	187	179
					60000	557	386	326	259	226	205	191	179	176	170	163	157
					100000	470	326	275	218	191	173	161	151	148	144	137	132
206	1-1/16 1-1/8 1-3/16 1-1/4 30mm	1 25mm	4368	2538	20000	1116	774	652	518	452	411	382	359	351	341	326	314
					30000	975	676	570	452	395	359	333	314	307	298	285	274
					40000	886	614	518	411	359	326	303	285	279	271	259	249
					60000	774	536	452	359	314	285	265	249	244	237	226	217
					100000	652	452	382	303	265	240	223	210	206	199	191	183
207	1-1/4 1-5/16 1-3/8 1-7/16 35mm	1-3/16 1-1/4 30mm	5759	3461	20000	1471	1020	860	683	596	542	503	473	463	450	430	414
					30000	1285	891	752	596	521	473	439	414	405	393	376	361
					40000	1168	810	683	542	473	430	399	376	368	357	341	328
					60000	1020	707	596	473	414	376	349	328	321	312	298	287
					100000	860	596	503	399	349	317	294	277	271	263	252	242
208	1-1/2 1-5/8 40mm	1-7/16 1-1/2▲ 35mm	7332	4475	20000	1873	1299	1095	869	759	690	641	603	590	573	548	527
					30000	1636	1134	957	759	663	603	560	527	515	500	478	460
					40000	1487	1031	869	690	603	548	508	478	468	454	435	418
					60000	1299	900	759	603	527	478	444	418	409	397	380	365
					100000	1095	759	641	508	444	403	375	352	345	335	320	308
209	1-5/8 1-11/16 1-3/4 45mm	1-1/2 40mm	7891	4906	20000	2016	1398	1179	936	817	743	689	649	635	616	589	567
					30000	1761	1221	1030	817	714	649	602	567	555	538	515	495
					40000	1600	1109	936	743	649	589	547	515	504	489	468	450
					60000	1398	969	817	649	567	515	478	450	440	427	409	393
					100000	1179	817	689	547	478	434	403	379	371	360	345	331
210	1-15/16 2 50mm	1-11/16 1-3/4 45mm	7891	5213	20000	2016	1398	1179	936	817	743	689	649	635	616	589	567
					30000	1761	1221	1030	817	714	649	602	567	555	538	515	495
					40000	1600	1109	936	743	649	589	547	515	504	489	468	450
					60000	1398	969	817	649	567	515	478	450	440	427	409	393
					100000	1179	817	689	547	478	434	403	379	371	360	345	331

* Slight interference fit required when operating on the right of the heavy line or in the shaded area.

▲ Piloted flange only

NOTE: Bearing analysis program “BEST” is available on www.ptwizard.com



E-Z KLEEN SC and DL (continued)

Ring Size	Shaft Size		Dynamic Capacity C, lbs.	Static Capacity C_0, lbs.	L_{10} Life - Hours	Allowable Equivalent Radial Load Rating (lbs.) at Various RPM*											
	SC	SCM				2500	2750	3000	3250	3500	3600	4000	4500	5000	5250	5500	6000
204	1/2 5/8 3/4 13/16 20mm		2899	1482	20000	201	195	189	184	180	178	172	165	160	157	155	150
					30000	176	170	165	161	157	155	150	144	139	137	135	131
					40000	160	155	150	146	143	141	136	131	127	125	123	119
					60000	139	135	131	128	125	123	119	115	111	109	107	104
					100000	118	114	111	108	105	104	101	97	93	92	90	88
205	7/8 15/16 1 25mm		3146	1769	20000	218	211	205	200	195	193	187	179	173	170	168	163
					30000	191	185	179	175	170	169	163	157	151	149	147	142
					40000	173	168	163	159	155	153	148	142	137	135	133	129
					60000	151	147	142	139	135	134	129	124	120	118	116	113
					100000	128	124	120	117	114	113	109	105	101	100	98	95
206	1-1/16 1-1/8 1-3/16 1-1/4 30mm	1 25mm	4368	2538	20000	303	293	285	278	271	268	259	249	240	237		
					30000	265	256	249	242	237	234	226	217	210	207		
					40000	240	233	226	220	215	213	206	198	191	188		
					60000	210	203	198	192	188	186	180	173	167	164		
					100000	177	172	167	162	158	157	151	146	141	138		
207	1-1/4 1-5/16 1-3/8 1-7/16 35mm	1-3/16 1-1/4 30mm	5759	3461	20000	399	387	376	366	357	354	341	328				
					30000	349	338	328	320	312	309	298	287				
					40000	317	307	298	290	283	281	271	261				
					60000	277	268	261	254	247	245	237	228				
					100000	234	226	220	214	209	207	200	192				
208	1-1/2 1-5/8 40mm	1-7/16 1-1/2▲ 35mm	7332	4475	20000	508	492	478	466	454	450	435					
					30000	444	430	418	407	397	393	380					
					40000	403	391	380	370	361	357	345					
					60000	352	341	332	323	315	312	301					
					100000	297	288	280	272	266	263	254					
209	1-5/8 1-11/16 1-3/4 45mm	1-1/2 40mm	7891	4906	20000	547	530	515	501	489	485	468					
					30000	478	463	450	438	427	423	409					
					40000	434	421	409	398	388	385	371					
					60000	379	367	357	348	339	336	324					
					100000	320	310	301	293	286	283	274					
210	1-15/16 2 50mm	1-11/16 1-3/4 45mm	7891	5213	20000	547	530	515	501	489	485						
					30000	478	463	450	438	427	423						
					40000	434	421	409	398	388	385						
					60000	379	367	357	348	339	336						
					100000	320	310	301	293	286	283						

* Slight interference fit required when operating on the right of the heavy line or in the shaded area.

▲ Piloted flange only

NOTE: Bearing analysis program "BEST" is available on www.ptwizard.com

FEATURES/BENEFITS PAGE B2-3	HOW TO ORDER/NOMENCLATURE PAGE B2-8	SELECTION/DIMENSIONS PAGE B2-24	ACCESSORIES PAGE B2-77

EASY SELECTION

DODGE®



E-Z KLEEN GT

Ring Size	Shaft Size		Dynamic Capacity C, lbs.	Static Capacity C_0, lbs.	Allowable Equivalent Radial Load Rating (lbs.) at Various RPM*							
	GT	GTM			L_{10} Life - Hours	50	150	250	500	750	1000	1500
204	3/4 20mm		2899	1482	20000	741	513	433	344	300	273	238
					30000	647	449	378	300	262	238	208
					40000	588	408	344	273	238	217	189
					60000	513	356	300	238	208	189	165
					100000	433	300	253	201	176	160	139
205	7/8 15/16 1 25mm	3/4	3146	1769	20000	804	557	470	373	326	296	259
					30000	702	487	411	326	285	259	226
					40000	638	442	373	296	259	235	205
					60000	557	386	326	259	226	205	179
					100000	470	326	275	218	191	173	151
206	1-1/8 1-3/16 1-1/4 30mm	1 25mm	4368	2538	20000	1116	774	652	518	452	411	359
					30000	975	676	570	452	395	359	314
					40000	886	614	518	411	359	326	285
					60000	774	536	452	359	314	285	249
					100000	652	452	382	303	265	240	210
207	1-1/4 1-3/8 1-7/16 35mm	1-3/16 1-1/4 30mm	5759	3461	20000	1471	1020	860	683	596	542	473
					30000	1285	891	752	596	521	473	414
					40000	1168	810	683	542	473	430	376
					60000	1020	707	596	473	414	376	328
					100000	860	596	503	399	349	317	277
208	1-1/2 40mm	1-7/16 1-1/2▲ 35mm	7332	4475	20000	1873	1299	1095	869	759	690	603
					30000	1636	1134	957	759	663	603	527
					40000	1487	1031	869	690	603	548	478
					60000	1299	900	759	603	527	478	418
					100000	1095	759	641	508	444	403	352
209	1-5/8 1-11/16 1-3/4 45mm	1-1/2 40mm	7891	4906	20000	2016	1398	1179	936	817	743	649
					30000	1761	1221	1030	817	714	649	567
					40000	1600	1109	936	743	649	589	515
					60000	1398	969	817	649	567	515	450
					100000	1179	817	689	547	478	434	379
210	1-15/16 2 50mm	1-11/16 1-3/4 45mm	7891	5213	20000	2016	1398	1179	936	817	743	649
					30000	1761	1221	1030	817	714	649	567
					40000	1600	1109	936	743	649	589	515
					60000	1398	969	817	649	567	515	450
					100000	1179	817	689	547	478	434	379

* Speed limit values reflect quad contact seal

▲ Piloted flange only

NOTE: Bearing analysis program “BEST” is available on www.ptwizard.com



E-Z KLEEN GT (continued)

Ring Size	Shaft Size		Dynamic Capacity C, lbs.	Static Capacity C_0, lbs.	Allowable Equivalent Radial Load Rating (lbs.) at Various RPM*							
	GT	GTM			L_{10} Life - Hours	1750	2000	2200	2600	3000	3200	3600
204	3/4 20mm		2899	1482	20000	226	217	210	198	189	185	178
					30000	198	189	183	173	165	162	155
					40000	180	172	166	157	150	147	141
					60000	157	150	145	138	131	128	123
					100000	132	127	123	116	111	108	104
205	7/8 15/16 1 25mm	3/4	3146	1769	20000	246	235	228	215	205	201	193
					30000	215	205	199	188	179	176	169
					40000	195	187	181	171	163	159	153
					60000	170	163	158	149	142	139	134
					100000	144	137	133	126	120	117	113
206	1-1/8 1-3/16 1-1/4 30mm	1 25mm	4368	2538	20000	341	326	316	299	285	279	268
					30000	298	285	276	261	249	244	234
					40000	271	259	251	237	226	221	213
					60000	237	226	219	207	198	193	186
					100000	199	191	185	175	167	163	157
207	1-1/4 1-3/8 1-7/16 35mm	1-3/16 1-1/4 30mm	5759	3461	20000	450	430	417	394	376	368	354
					30000	393	376	364	344	328	321	309
					40000	357	341	331	313	298	292	281
					60000	312	298	289	273	261	255	245
					100000	263	252	244	230	220	215	207
208	1-1/2 40mm	1-7/16 1-1/2▲ 35mm	7332	4475	20000	573	548	531	502	478	468	450
					30000	500	478	463	438	418	409	393
					40000	454	435	421	398	380	372	357
					60000	397	380	368	348	332	325	312
					100000	335	320	310	293	280	274	263
209	1-5/8 1-11/16 1-3/4 45mm	1-1/2 40mm	7891	4906	20000	616	589	571	540	515	504	485
					30000	538	515	499	472	450	440	423
					40000	489	468	453	429	409	400	385
					60000	427	409	396	374	357	349	336
					100000	360	345	334	316	301	295	283
210	1-15/16 2 50mm	1-11/16 1-3/4 45mm	7891	5213	20000	616	589	571	540	515	504	485
					30000	538	515	499	472	450	440	423
					40000	489	468	453	429	409	400	385
					60000	427	409	396	374	357	349	336
					100000	360	345	334	316	301	295	283

* Speed limit values reflect quad contact seal

▲ Piloted flange only

NOTE: Bearing analysis program "BEST" is available on www.ptwizard.com

FEATURES/BENEFITS PAGE B2-3	HOW TO ORDER/NOMENCLATURE PAGE B2-8	SELECTION/DIMENSIONS PAGE B2-24	ACCESSORIES PAGE B2-77

EASY SELECTION

DODGE®



E-Z KLEEN GT (continued)

Ring Size	Shaft Size		Dynamic Capacity C, lbs.	Static Capacity C_0, lbs.	Allowable Equivalent Radial Load Rating (lbs.) at Various RPM*							
	GT	GTM			L_{10} Life - Hours	3840	4000	4240	4480	4800	5040	5300
204	3/4 20mm		2899	1482	20000	174	172	169	165	162	159	156
					30000	152	150	147	145	141	139	137
					40000	138	136	134	131	128	126	124
					60000	121	119	117	115	112	110	108
					100000	102	101	99	97	95	93	92
205	7/8 15/16 1 25mm	3/4	3146	1769	20000	189	187	183	180	176	173	170
					30000	165	163	160	157	153	151	148
					40000	150	148	145	143	139	137	135
					60000	131	129	127	125	122	120	118
					100000	111	109	107	105	103	101	99
206	1-1/8 1-3/16 1-1/4 30mm	1 25mm	4368	2538	20000	262	259	254	249	244	240	236
					30000	229	226	222	218	213	209	206
					40000	208	206	202	198	193	190	187
					60000	182	180	176	173	169	166	163
					100000	154	151	149	146	143	140	138
207	1-1/4 1-3/8 1-7/16 35mm	1-3/16 1-1/4 30mm	5759	3461	20000	346	341	335	329	321	316	
					30000	302	298	293	287	281	276	
					40000	275	271	266	261	255	251	
					60000	240	237	232	228	223	219	
					100000	202	200	196	192	188	185	
208	1-1/2 40mm	1-7/16 1-1/2▲ 35mm	7332	4475	20000	441	435	426	419			
					30000	385	380	372	366			
					40000	350	345	338	332			
					60000	306	301	296	290			
					100000	258	254	249	245			
209	1-5/8 1-11/16 1-3/4 45mm	1-1/2 40mm	7891	4906	20000	474	468	459				
					30000	414	409	401				
					40000	376	371	364				
					60000	329	324	318				
					100000	277	274	268				
210	1-15/16 2 50mm	1-11/16 1-3/4 45mm	7891	5213	20000	474						
					30000	414						
					40000	376						
					60000	329						
					100000	277						

* Speed limit values reflect quad contact seal

▲ Piloted flange only

NOTE: Bearing analysis program “BEST” is available on www.ptwizard.com

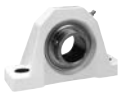

E-Z KLEEN GT (continued)

Ring Size	Shaft Size		Dynamic Capacity C, lbs.	Static Capacity C_0, lbs.	Allowable Equivalent Radial Load Rating (lbs.) at Various RPM*						
	GT	GTM			L_{10} Life - Hours	5600	6000	6500	7000	7200	8000
204	3/4 20mm		2899	1482	20000	154	150	146	143	141	136
					30000	134	131	128	125	123	119
					40000	122	119	116	113	112	108
					60000	107	104	101	99	98	95
					100000	90	88	85	83	83	80
205	7/8 15/16 1 25mm	3/4	3146	1769	20000	167	163	159	155	153	
					30000	146	142	139	135	134	
					40000	132	129	126	123	122	
					60000	116	113	110	107	106	
					100000	97	95	93	91	90	
206	1-1/8 1-3/16 1-1/4 30mm	1 25mm	4368	2538	20000	231	226				
					30000	202	198				
					40000	184	180				
					60000	160	157				
					100000	135	132				
207	1-1/4 1-3/8 1-7/16 35mm	1-3/16 1-1/4 30mm	5759	3461	20000						
					30000						
					40000						
					60000						
					100000						
208	1-1/2 40mm	1-7/16 1-1/2▲ 35mm	7332	4475	20000						
					30000						
					40000						
					60000						
					100000						
209	1-5/8 1-11/16 1-3/4 45mm	1-1/2 40mm	7891	4906	20000						
					30000						
					40000						
					60000						
					100000						
210	1-15/16 2 50mm	1-11/16 1-3/4 45mm	7891	5213	20000						
					30000						
					40000						
					60000						
					100000						

* Speed limit values reflect quad contact seal

▲ Piloted flange only

NOTE: Bearing analysis program "BEST" is available on www.ptwizard.com

EASY SELECTION



Table 2 - Easy Selection For E-Z KLEEN Polymer-Housed Sleeve Bearing Mounted Units - Inch

RADIAL LOAD RATINGS (LBS) AT VARIOUS REVOLUTIONS PER MINUTE (RPM)

Series	Shaft Size	Up To 10	25	50	75	100	150	200	250
204	3/4	450	400	375	300	230	175	110	90
205	1	600	550	450	215	235	175	110	90
206	1-3/16 1-1/4	900	800	500	325	250	175	110	90
207	1-1/4 1-7/16	1000	900	600	400	300	175	120	95
208	1-1/2	1400	1200	700	430	320	180	125	95
210	1-15/16	1800	1600	750	450	350	185	130	100

RADIAL LOAD RATINGS (LBS) AT VARIOUS REVOLUTIONS PER MINUTE (RPM)

Series	Shaft Size	300	350	400	450	500	550	600	650
204	3/4	60	50	45	40	35	25	20	15
205	1	60	50	45	40	35	25	20	15
206	1-3/16 1-1/4	65	60	50	40	35	30	25	20
207	1-1/4 1-7/16	70	65	55	45	40	35	30	
208	1-1/2	70	65	55	45	40	35		
210	1-15/16	80	70	60	50	45			

Continuous operating temperature: -40 to 180º F

NOTE: Bearing analysis program “BEST” is available on www.ptwizard.com



Table 3 - Easy Selection For E-Z KLEEN Polymer-Housed Sleeve Bearing Mounted Units - Metric

RADIAL LOAD RATINGS (NEWTONS) AT VARIOUS REVOLUTIONS PER MINUTE (RPM)

Series	Shaft Size	Up To 10	25	50	75	100	150	200	250
204	20	2000	1775	1665	1330	1020	775	485	400
205	25	2665	2445	2000	1400	1045	775	485	400
206	30	4000	3555	2220	1445	1110	775	485	400
207	35	4445	4000	2665	1775	1330	775	530	420
208	40	6225	5335	3110	1910	1420	8000	555	420
210	50	8005	7115	3335	2000	1555	820	575	440

RADIAL LOAD RATINGS (NEWTONS) AT VARIOUS REVOLUTIONS PER MINUTE (RPM)

Series	Shaft Size	300	350	400	450	500	550	600	650
204	20	265	220	200	175	155	110	85	65
205	25	265	220	200	175	155	110	85	65
206	30	285	265	220	175	155	130	110	85
207	35	310	285	240	200	175	155	130	
208	40	310	285	240	200	175	155		
210	50	355	310	265	220	200			

Continuous operating temperature: -40 to 180º C

NOTE: Bearing analysis program “BEST” is available on www.ptwizard.com

EASY SELECTION



Chemical Resistance Chart*

	Housing		Ball Bearing Insert	
	Polymer	Stainless	EZ-KLEEN	ULTRA-KLEEN
A				
Acetic Acid	B	B	A	B
Acetone	B	A	A	B
Ammonium Chloride		B	A	B
Ammonium Hydroxide	D	A		A
Aniline	A	A	B	A
B				
Beer		A	A	
Beet Sugar Liquids		A		
Benzene	B	B	B	B
Bleaching Lye	A			
Brake Fluid	A			
Butane	A	A	A	
Butanol	B	A	A	
Butyl Acetate	A	B	A	
C				
Calcium Chloride	A	B	A	C
Calcium Hydroxide		B	A	
Calcium Hypochlorite	A	D	B	C
Carbon Disulphide	A	B	B	
Carbon Tetrachloride	A	B	A	A
Chloroform	D	A	A	A
Chromic Acid	A	B	A	B
Citric Acid	A	A	A	A
Cresol	D	A		
D				
Detergents	A	A	A	A
Diesel Fuel	A	A	B	

Where: (A) = No Effect - Excellent
(B) = Minor Effect - Good
(C) = Moderate Effect - Fair
(D) = Severe Effect - Not Recommended
Blank = No Data Available

NOTE: All references assume exposure temperature of 72°F.

* This chemical resistance chart is intended as a guideline. For exposure to high concentrations, prolonged contact, or higher operating temperatures, etc. reliance upon actual application experience is best. Aggressive relubrication intervals may also benefit bearing life. Contact application engineering at 864-284-5700 for assistance.

NOTE: Bearing analysis program "BEST" is available on www.ptwizard.com



Chemical Resistance Chart*

	Housing		Ball Bearing Insert	
	Polymer	Stainless	EZ-KLEEN	ULTRA-KLEEN
E				
Ethanol	A	A		A
Ether (diethyl-)	A	A	B	A
Ethyl Acetate	B	B	B	
Ethylene Dichloride	D	B	B	
F				
Ferrous Chloride		D	B	
Formaldehyde		B	B	
Formic Acid	B	B	A	B
Freon 11	A	A	A	
G				
Gasoline	A	A	A	A
Glycerol (Glycerin)	B	A	A	A
Glycol	B			
Grease	A	A	A	A
H				
Heptane	A	A	A	
Hexane	A	A	A	
Hydrochloric Acid (20%)	A	D	B	D
Hydrochloric Acid (100%)	D	D	C	D
Hydrofluoric Acid (20%)	D	D	B	D
Hydrofluoric Acid (100%)	D	D	C	D
Hydrogen Peroxide (10%)	A	C	A	
Hydrogen Peroxide (30%)	B	C	A	
I, K, L				
Iodine		D	B	D
Isopropanol (Isopropyl Alcohol)	B	A	A	
Kerosene	A	A	A	A
Lithium Chloride		A		

Where: (A) = No Effect - Excellent
(B) = Minor Effect - Good
(C) = Moderate Effect - Fair
(D) = Severe Effect - Not Recommended
Blank = No Data Available

NOTE: All references assume exposure temperature of 72°F.

* This chemical resistance chart is intended as a guideline. For exposure to high concentrations, prolonged contact, or higher operating temperatures, etc. reliance upon actual application experience is best. Aggressive relubrication intervals may also benefit bearing life. Contact application engineering at 864-284-5700 for assistance.

NOTE: Bearing analysis program "BEST" is available on www.ptwizard.com

EASY SELECTION



Chemical Resistance Chart*

	Housing		Ball Bearing Insert	
	Polymer	Stainless	EZ-KLEEN	ULTRA-KLEEN
M				
Methanol	A	A	A	A
Methylene Chloride	D	B	B	
Methyl Ethyl Ketone	A	A	A	
Mineral Oil	A	A	A	A
Motor Oils	A	A	A	A
N				
Nitric Acid (10%)	A	A	A	A
Nitric Acid (20%)	D	A	A	A
Nitric Acid (50%)	D	A	A	A
O				
Oleic Acid	A	A	B	B
Olive Oil	A	A	A	A
P				
Perchloroethylene	A	B	B	
Phenol	B	B	A	
Phosphoric Acid (<40%)	A	B	A	A
Phosphoric Acid (>40%)	A	C	A	B
Potassium Chloride	A	B	A	B
Potassium Dichromate	A	B	B	B
Potassium Hydroxide	D	B	A	B
Potassium Permanganate	A	A	B	B
S				
Silicone	A	B	A	A
Soap Solution	A	A	A	A
Sodium Bicarbonate	A	A	A	A
Sodium Bisulfate		D	B	B
Sodium Bisulfite	A	B	B	B
Sodium Carbonate	A	A	A	B
Sodium Chloride	A	B	A	B
Sodium Hydroxide (20%)	D	A	A	A
Sodium Hydroxide (50%)	D	B	A	

Where: (A) = No Effect - Excellent
(B) = Minor Effect - Good
(C) = Moderate Effect - Fair
(D) = Severe Effect - Not Recommended
Blank = No Data Available

NOTE: All references assume exposure temperature of 72°F.

* This chemical resistance chart is intended as a guideline. For exposure to high concentrations, prolonged contact, or higher operating temperatures, etc. reliance upon actual application experience is best. Aggressive relubrication intervals may also benefit bearing life. Contact application engineering at 864-284-5700 for assistance.

NOTE: Bearing analysis program "BEST" is available on www.ptwizard.com

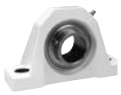

Chemical Resistance Chart*

	Housing		Ball Bearing Insert	
	Polymer	Stainless	EZ-KLEEN	ULTRA-KLEEN
S (Continued)				
Sodium Hydroxide (80%)	D	C	B	
Sodium Hypochlorite (<20%)	A	C	B	C
Sodium Hypochlorite (100%)	B	D	B	D
Sulfuric Acid (<10%)	A	D	A	C
Sulfuric Acid (10 - 75%)	A	D	B	D
Sulfuric Acid (>75%)	D	D	C	D
T				
Tetrahydofuran	B	A	A	
Toulene	A	A	A	
Trichlorethylene	B	B	A	
Triethylamine		A	A	
Turpentine	A	A	A	
V, W, X				
Vegetable Oils	A	A	A	A
Water	A	A	A	A
Xylene	A	B	A	

Where: (A) = No Effect - Excellent
(B) = Minor Effect - Good
(C) = Moderate Effect - Fair
(D) = Severe Effect - Not Recommended
Blank = No Data Available

NOTE: All references assume exposure temperature of 72°F.

* This chemical resistance chart is intended as a guideline. For exposure to high concentrations, prolonged contact, or higher operating temperatures, etc. reliance upon actual application experience is best. Aggressive relubrication intervals may also benefit bearing life. Contact application engineering at 864-284-5700 for assistance.

NOTE: Bearing analysis program "BEST" is available on www.ptwizard.com

SELECTION/DIMENSIONS

DODGE®



E-Z KLEEN Mounted Bearings

GTEZ NORMAL DUTY STAINLESS STEEL HOUSED PILLOW BLOCKS

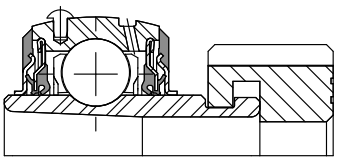

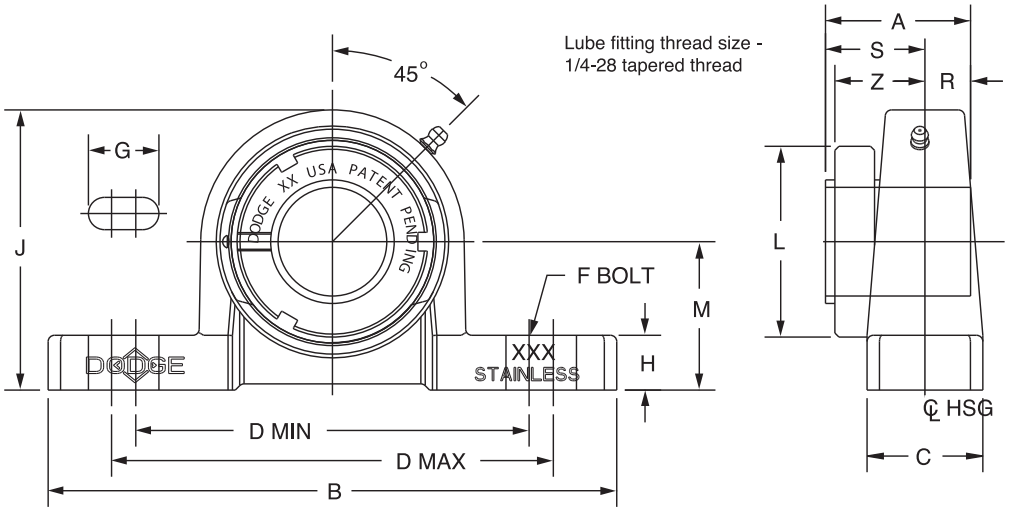

Series	Shaft Size	Complete Unit		Unit Without Adapter		Adapter & Nut Assembly	
		Part No.	Description	Part No.	Description	Part No.	Description
204	3/4	**129260**	P2B-GTEZ-012-SHCR	**129559**	P2B-GTEZ-04-SHCR	**129967**	AN-GT-04-012-CR
	20mm	***129261***	*P2B-GTEZ-20M-SHCR*			***129980***	*AN-GT-04-20M-CR*
205	1	**129262**	P2B-GTEZ-100-SHCR	**129560**	P2B-GTEZ-05-SHCR	**129968**	AN-GT-05-100-CR
	25mm	***129263***	*P2B-GTEZ-25M-SHCR*			***129981***	*AN-GT-05-25M-CR*
206	1-1/8	**064994**	P2B-GTEZ-102-SHCR	**129561**	P2B-GTEZ-06-SHCR	**129969**	AN-GT-06-102-CR
	1-3/16	**129264**	P2B-GTEZ-103-SHCR			**129970**	AN-GT-06-103-CR
	1-1/4	**@**	P2B-GTEZ-104S-SHCR			**129971**	AN-GT-06-104-CR
	30mm	***@***	*P2B-GTEZ-30M-SHCR*			***129982***	*AN-GT-06-30M-CR*
206 (GTU)	1-1/8	**@**	P2B-GTUEZ-102-SHCR	**129566**	P2B-GTUEZ-06-SHCR	**129969**	AN-GT-06-102-CR
	1-3/16	**129265**	P2B-GTUEZ-103-SHCR			**129602**	AN-GT-06-103-CR
	1-1/4	**129266**	P2B-GTUEZ-104S-SHCR			**129605**	AN-GT-06-104S-CR
	30mm	***129267***	*P2B-GTUEZ-30M-SHCR*			***129612***	*AN-GT-06-30M-CR*
207	1-1/4	**129268**	P2B-GTEZ-104-SHCR	**129562**	P2B-GTEZ-07-SHCR	**129972**	AN-GT-07-104-CR
	1-3/8	**067678**	P2B-GTEZ-106-SHCR			**129973**	AN-GT-07-106-CR
	1-7/16	**129269**	P2B-GTEZ-107-SHCR			**129974**	AN-GT-07-107-CR
	35mm	***129270***	*P2B-GTEZ-35M-SHCR*			***129983***	*AN-GT-07-35M-CR*
208	1-1/2	**129271**	P2B-GTEZ-108-SHCR	**129563**	P2B-GTEZ-08-SHCR	**129975**	AN-GT-08-108-CR
	40mm	***@***	*P2B-GTEZ-40M-SHCR*			***129984***	*AN-GT-08-40M-CR*
208 *(GTB)*	1-1/2	**129272**	P2B-GTBEZ-108-SHCR	**129565**	P2B-GTBEZ-08-SHCR	**129606**	AN-GT-08-108-CR
	40mm	***129273***	*P2B-GTBEZ-40M-SHCR*			***129613***	*AN-GT-08-40M-CR*
210	1-15/16	**129274**	P2B-GTEZ-115-SHCR	**129564**	P2B-GTEZ-10-SHCR	**129978**	AN-GT-10-115-CR
	2	**073007**	P2B-GTEZ-200-SHCR			**129979**	AN-GT-10-200-CR
	50mm	***129275***	*P2B-GTEZ-50M-SHCR*			***129986***	*AN-GT-10-50M-CR*



E-Z KLEEN Mounted Bearings
GTEZ NORMAL DUTY STAINLESS STEEL HOUSED PILLOW BLOCKS

Series	Shaft Size	Weight lbs *kg*	A	B	C	D		F Bolt Dia.	G	H	J	L	M	R#	S#	Z
						min.	max.									
204	3/4	1.46	1.48	5.00	1.00	3.38	4.18	3/8	0.84	0.50	2.50	1.50	1.31	0.46	1.02	1.03
	20mm	*0.65*	*37.6*	*127.0*	*25.4*	*85.9*	*106.2*	*M10*	*21.3*	*12.7*	*63.5*	*38.1*	*33.3*	*11.7*	*25.9*	*26.2*
205	1	1.92	1.46	5.50	1.12	3.68	4.50	3/8	0.85	0.53	2.71	1.80	1.44	0.48	0.98	1.00
	25mm	*0.83*	*37.1*	*139.7*	*28.4*	*93.5*	*114.3*	*M10*	*21.6*	*13.5*	*68.8*	*45.7*	*36.5*	*12.2*	*24.9*	*25.4*
206	1-1/8 1-3/16 1-1/4	2.60	1.61	6.25	1.25	4.26	5.00	1/2	0.93	0.53	3.13	2.08	1.63	0.52	1.09	1.13
	30mm	*1.18*	*40.9*	*158.8*	*31.8*	*108.2*	*127.0*	*M12*	*23.6*	*13.5*	*79.5*	*52.8*	*41.3*	*13.2*	*27.7*	*28.7*
206 (GTU)	1-1/8 1-3/16 1-1/4	2.65	1.61	6.25	1.25	4.26	5.00	1/2	0.93	0.59	3.19	2.08	1.69	0.52	1.09	1.13
	30mm	*1.18*	*40.9*	*158.8*	*31.8*	*108.2*	*127.0*	*M12*	*23.6*	*15.0*	*81.0*	*52.8*	*42.9*	*13.2*	*27.7*	*28.7*
207	1-1/4 1-3/8 1-7/16	3.83	1.62	6.50	1.38	4.68	5.44	1/2	0.94	0.56	3.63	2.38	1.88	0.54	1.08	1.14
	35mm	*1.75*	*41.1*	*165.1*	*35.1*	*118.9*	*138.2*	*M12*	*23.9*	*14.2*	*92.2*	*60.5*	*47.6*	*13.7*	*27.4*	*29.0*
208	1-1/2	4.90	1.84	7.00	1.50	5.18	6.00	1/2	0.97	0.75	4.00	2.62	2.13	0.61	1.23	1.23
	40mm	*2.22*	*46.7*	*177.8*	*38.1*	*131.6*	*152.4*	*M12*	*24.6*	*19.1*	*101.6*	*66.5*	*54.0*	*15.5*	*31.2*	*31.2*
208 (GTB)	1-1/2	4.85	1.84	7.00	1.50	5.18	6.00	1/2	0.97	0.56	3.81	2.62	1.94	0.61	1.23	1.23
	40mm	*2.22*	*46.7*	*177.8*	*38.1*	*131.6*	*152.4*	*M12*	*24.6*	*14.2*	*96.8*	*66.5*	*49.2*	*15.5*	*31.2*	*31.2*
210	1-15/16 2	6.14	1.86	8.00	1.63	5.76	6.68	5/8	1.14	0.62	4.31	3.13	2.25	0.63	1.23	1.26
	50mm	*2.62*	*47.2*	*203.2*	*41.4*	*146.3*	*169.7*	*M16*	*29.0*	*15.7*	*109.5*	*79.5*	*57.2*	*16.0*	*31.2*	*32.0*

#R & S dimensions will vary slightly depending on true shaft diameter

SELECTION/DIMENSIONS

E-Z KLEEN Mounted Bearings

SCEZ NORMAL DUTY STAINLESS STEEL HOUSED PILLOW BLOCKS

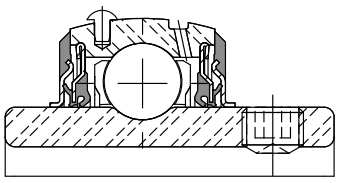

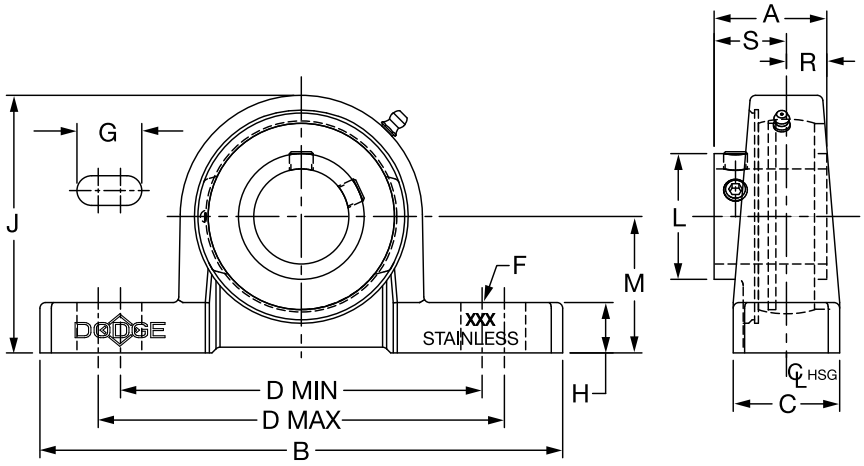

Series	Shaft Size	With Corrosion Resistant Insert		Standard Insert with Flingers	
		Part No.	Description	Part No.	Description
204	1/2	**074512**	P2B-SCEZ-008L-SHCR*	**@**	P2B-SCEZ-008L-SH
	5/8	**068236**	P2B-SCEZ-010L-SHCR*	**074631**	P2B-SCEZ-010L-SH
	3/4	**127670**	P2B-SCEZ-012-SHCR	**059870**	P2B-SCEZ-012-SH
	20mm	***127697***	*P2B-SCEZ-20M-SHCR*	**@**	*P2B-SCEZ-20M-SH*
205	7/8	**056553**	P2B-SCEZ-014-SHCR*	**049996**	P2B-SCEZ-014-SH
	15/16	**067839**	P2B-SCEZ-015-SHCR*	**@**	P2B-SCEZ-015-SH
	1	**127671**	P2B-SCEZ-100-SHCR	**056796**	P2B-SCEZ-100-SH
	25mm	***127698***	*P2B-SCEZ-25M-SHCR*	**@**	*P2B-SCEZ-25M-SH*
206	1-1/8	**@**	P2B-SCEZ-102-SHCR*	**056548**	P2B-SCEZ-102-SH
	1-3/16	**127672**	P2B-SCEZ-103-SHCR	**056797**	P2B-SCEZ-103-SH
	1-1/4	**127674**	P2B-SCEZ-104S-SHCR	**067630**	P2B-SCEZ-104S-SH
	30mm	**@**	*P2B-SCEZ-30M-SHCR*	**@**	*P2B-SCEZ-30M-SH*
206 (SCU)	1-1/8	**@**	P2B-SCUEZ-102-SHCR*	**@**	P2B-SCUEZ-102-SH
	1-3/16	**127673**	P2B-SCUEZ-103-SHCR	**@**	P2B-SCUEZ-103-SH
	1-1/4	**127675**	P2B-SCUEZ-104S-SHCR	**@**	P2B-SCUEZ-104S-SH
	30mm	***127699***	*P2B-SCUEZ-30M-SHCR*	**@**	*P2B-SCUEZ-30M-SH*
207	1-1/4	**127676**	P2B-SCEZ-104-SHCR	**059798**	P2B-SCEZ-104-SH
	1-3/8	**@**	P2B-SCEZ-106-SHCR*	**056525**	P2B-SCEZ-106-SH
	1-7/16	**127677**	P2B-SCEZ-107-SHCR	**059799**	P2B-SCEZ-107-SH
	35mm	***127700***	*P2B-SCEZ-35M-SHCR*	**@**	*P2B-SCEZ-35M-SH*
208	1-1/2	**127678**	P2B-SCEZ-108-SHCR	**056565**	P2B-SCEZ-108-SH
	1-5/8	**@**	P2B-SCEZ-110-SHCR*	**062874**	P2B-SCEZ-110-SH
	40mm	**@**	*P2B-SCEZ-40M-SHCR*	**@**	*P2B-SCEZ-40M-SH*
208 *(SCB)*	1-1/2	**127679**	P2B-SCBEZ-108-SHCR	**@**	P2B-SCBEZ-108-SH
	40mm	***127701***	*P2B-SCBEZ-40M-SHCR*	**@**	*P2B-SCBEZ-40M-SH*
210	1-11/16	**@**	P2B-SCMEZ-111-SHCR	**@**	P2B-SCMEZ-111-SH
	1-15/16	**127680**	P2B-SCEZ-115-SHCR	**056800**	P2B-SCEZ-115-SH
	2	**064306**	P2B-SCEZ-200-SHCR	**062879**	P2B-SCEZ-200-SH
	50mm	***127702***	*P2B-SCEZ-50M-SHCR*	**@**	*P2B-SCEZ-50M-SH*

@ Assembled to order * 20 piece minimum



E-Z KLEEN Mounted Bearings
SCEZ NORMAL DUTY STAINLESS STEEL HOUSED PILLOW BLOCKS

Series	Shaft Size	Weight lbs *kg*	A	B	C	D		F Bolt Dia.	G	H	J	L	M	R	S
						min.	max.								
204	1/2	1.39	1.23	5.00	1.00	3.38	4.18	3/8	0.84	0.50	2.50	1.12	1.31	0.50	0.73
	5/8	1.35													
	3/4	1.31													
	20mm	0.59	*31.2*	*127.0*	*25.4*	*85.9*	*106.2*	*M10*	*21.3*	*12.7*	*63.5*	*28.4*	*33.3*	*12.7*	*18.5*
205	7/8	1.65	1.34	5.50	1.12	3.68	4.50	3/8	0.85	0.53	2.71	1.32	1.44	0.56	0.78
	15/16	1.62													
	1	1.59													
	25mm	0.73	*34.0*	*139.7*	*28.4*	*93.5*	*114.3*	*M10*	*21.6*	*13.5*	*68.8*	*33.5*	*36.5*	*14.2*	*19.8*
206	1-1/8	2.37	1.52	6.25	1.25	4.26	5.00	1/2	0.93	0.53	3.13	1.57	1.63	0.58	0.94
	1-3/16	2.33													
	1-1/4	2.29													
	30mm	1.06	*38.6*	*158.8*	*31.8*	*108.2*	*127.0*	*M12*	*23.6*	*13.5*	*79.5*	*39.9*	*41.3*	*14.7*	*23.9*
206 (SCU)	1-1/8	2.48	1.52	6.25	1.25	4.26	5.00	1/2	0.93	0.59	3.19	1.57	1.69	0.58	0.94
	1-3/16	2.44													
	1-1/4	2.39													
	30mm	1.11	*38.6*	*158.8*	*31.8*	*108.2*	*127.0*	*M12*	*23.6*	*15.0*	*81.0*	*39.9*	*42.9*	*14.7*	*23.9*
207	1-1/4	3.36	1.71	6.50	1.38	4.68	5.44	1/2	0.94	0.56	3.63	1.84	1.88	0.67	1.04
	1-3/8	3.25													
	1-7/16	3.19													
	35mm	*1.47*	*43.4*	*165.1*	*35.1*	*118.9*	*138.2*	*M12*	*23.9*	*14.2*	*92.2*	*46.7*	*47.6*	*17.0*	*26.4*
208	1-1/2	4.39	1.94	7.00	1.50	5.18	6.00	1/2	0.97	0.75	4.00	2.05	2.13	0.75	1.19
	1-5/8														
	40mm	*1.95*	*49.3*	*177.8*	*38.1*	*131.6*	*152.4*	*M12*	*24.6*	*19.1*	*101.6*	*52.1*	*54.0*	*19.1*	*30.2*
208 *(SCB)*	1-1/2	3.93	1.94	7.00	1.50	5.18	6.00	1/2	0.97	0.56	3.81	2.05	1.94	0.75	1.19
	40mm	*1.74*	*49.3*	*177.8*	*38.1*	*131.6*	*152.4*	*M12*	*24.6*	*14.2*	*96.8*	*52.1*	*49.2*	*19.1*	*30.2*
210	1-11/16	5.14	1.94	8.00	1.63	5.76	6.68	5/8	1.14	0.62	4.31	2.43	2.25	0.75	1.19
	1-15/16	5.09													
	2														
	50mm	*2.29*	*49.3*	*203.2*	*41.4*	*146.3*	*169.7*	*M16*	*29.0*	*15.7*	*109.5*	*61.7*	*57.2*	*19.1*	*30.2*

FEATURES/BENEFITS PAGE B2-3	HOW TO ORDER/NOMENCLATURE PAGE B2-8	SELECTION/DIMENSIONS PAGE B2-24	ACCESSORIES PAGE B2-77

SELECTION/DIMENSIONS

E-Z KLEEN Mounted Bearings
DLEZ NORMAL DUTY STAINLESS STEEL HOUSED PILLOW BLOCKS

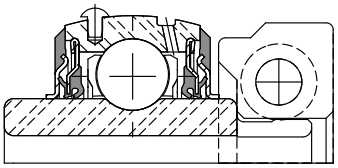

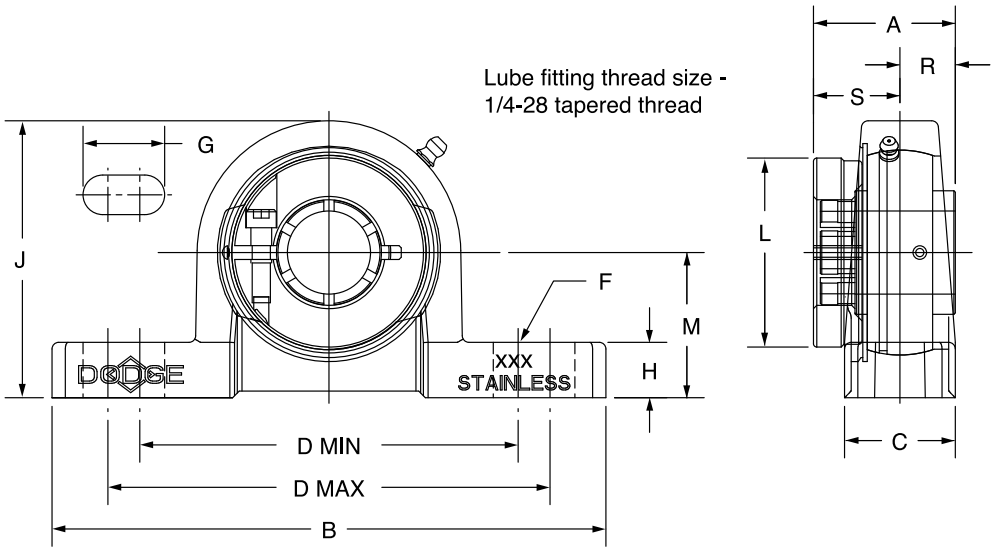

Series	Shaft Size	Part No.	Description	Weight lgs *kg*	A	B	C	D min.	D max.	F Bolt Dia.	G	H	J	L	M	R	S
204	3/4	**127715**	P2B-DLEZ-012-SHCR	1.46	1.28	5.00	1.00	3.38	4.18	3/8	0.84	0.50	2.50	1.71	1.31	0.50	0.78
	20mm	***127739***	*P2B-DLEZ-20M-SHCR*	*0.65*	*32.5*	*127.0*	*25.4*	*85.9*	*106.2*	*M10*	*21.3*	*12.7*	*63.5*	*43.4*	*33.3*	*12.7*	*19.8*
205	7/8	**@**	P2B-DLEZ-014-SHCR*	1.92	1.44	5.50	1.12	3.68	4.50	3/8	0.85	0.53	2.71	1.99	1.44	0.56	0.88
	15/16	**@**	P2B-DLEZ-015-SHCR*	1.87													
	1	**127716**	P2B-DLEZ-100-SHCR	1.82													
	25mm	***127740***	*P2B-DLEZ-25M-SHCR*	*0.83*	*36.6*	*139.7*	*28.4*	*93.5*	*114.3*	*M10*	*21.6*	*13.5*	*68.8*	*50.5*	*36.5*	*14.2*	*22.4*
206	1-1/8	**@**	P2B-DLEZ-102-SHCR*	2.60	1.56	6.25	1.25	4.26	5.00	1/2	0.93	0.53	3.13	2.22	1.63	0.58	0.98
	1-3/16	**127717**	P2B-DLEZ-103-SHCR	2.55													
	1-1/4	**127718**	P2B-DLEZ-104S-SHCR	2.50													
	30mm	***127741***	*P2B-DLEZ-30M-SHCR*	*1.18*	*39.6*	*158.8*	*31.8*	*108.2*	*127.0*	*M12*	*23.6*	*13.5*	*79.5*	*56.4*	*41.3*	*14.7*	*24.9*
206 (DLU)	1-1/8	**@**	P2B-DLUEZ-102-SHCR*	2.65	1.56	6.25	1.25	4.26	5.00	1/2	0.93	0.59	3.19	2.22	1.69	0.58	0.98
	1-3/16	**068234**	P2B-DLUEZ-103-SHCR	2.60													
	1-1/4	**@**	P2B-DLUEZ-104S-SHCR	2.55													
	30mm	*@*	*P2B-DLUEZ-30M-SHCR*	*1.18*	*39.6*	*158.8*	*31.8*	*108.2*	*127.0*	*M12*	*23.6*	*15.0*	*81.0*	*56.4*	*42.9*	*14.7*	*24.9*
207	1-1/4	**127719**	P2B-DLEZ-104-SHCR	3.83	1.75	6.50	1.38	4.68	5.44	1/2	0.94	0.56	3.63	2.69	1.88	0.67	1.08
	1-3/8	**@**	P2B-DLEZ-106-SHCR*	3.74													
	1-7/16	**127720**	P2B-DLEZ-107-SHCR	3.66													
	35mm	***127742***	*P2B-DLEZ-35M-SHCR*	*1.75*	*44.5*	*165.1*	*35.1*	*118.9*	*138.2*	*M12*	*23.9*	*14.2*	*92.2*	*68.3*	*47.6*	*17.0*	*27.4*
208	1-1/2	**127721**	P2B-DLEZ-108-SHCR	4.90	2.01	7.00	1.50	5.18	6.00	1/2	0.97	0.75	4.00	2.74	2.13	0.75	1.26
	40mm	***127743***	*P2B-DLEZ-40M-SHCR*	*2.22*	*51.1*	*177.8*	*38.1*	*131.6*	*152.4*	*M12*	*24.6*	*19.1*	*101.6*	*69.6*	*54.0*	*19.1*	*32.0*
208 *(DLB)*	1-1/2	**049469**	P2B-DLBEZ-108-SHCR	4.85	2.01	7.00	1.50	5.18	6.00	1/2	0.97	0.56	3.81	2.74	1.94	0.75	1.26
	40mm	***@***	*P2B-DLBEZ-40M-SHCR*	*2.22*	*51.1*	*177.8*	*38.1*	*131.6*	*152.4*	*M12*	*24.6*	*14.2*	*96.8*	*69.6*	*49.2*	*19.1*	*32.0*
210	1-11/16	**@**	P2B-DLMEZ-111-SHCR*	6.14	2.01	8.00	1.63	5.76	6.68	5/8	1.14	0.62	4.31	3.24	2.25	0.75	1.26
	1-15/16	**127722**	P2B-DLEZ-115-SHCR	5.77													
	50mm	***127744***	*P2B-DLEZ-50M-SHCR*	*2.62*	*51.1*	*203.2*	*41.4*	*146.3*	*169.7*	*M16*	*29.0*	*15.7*	*109.5*	*82.3*	*57.2*	*19.1*	*32.0*

@ Assembled to order
20 piece minimum

DODGE®



E-Z KLEEN Mounted Bearings

SCEZ TB SHCR NORMAL DUTY STAINLESS STEEL TAPPED BASE BEARINGS

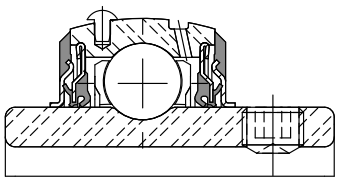

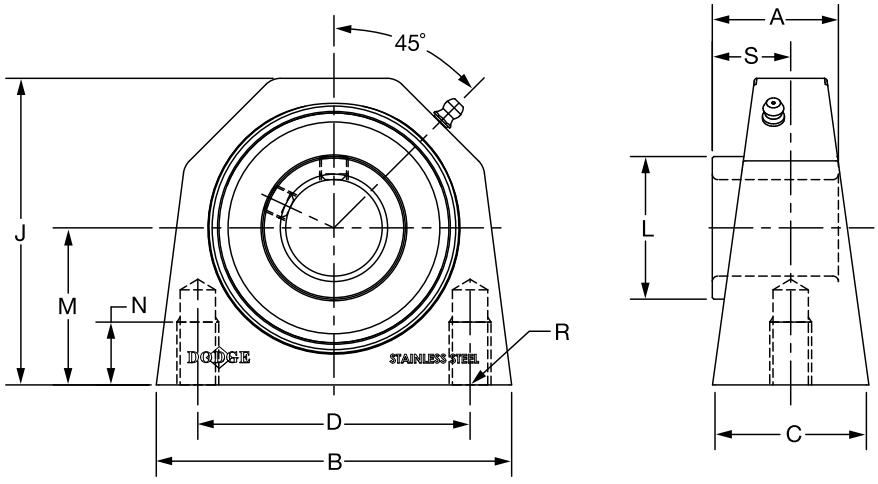

Series	Shaft Size	Corrosion Resistant Insert		Weight lbs *kg*	A	B	C	D	J	L	M	N	R	S
		Part No.	Description											
204	3/4	**136912**	TB-SCEZ-012-SHCR	1.27	1.23	2.77	1.36	2.00	2.50	1.12	1.31	0.45	3/8-16	0.73
	20mm	***136955***	*TB-SCEZ-20M-SHCR*	*.58*	*31.2*	*70.4*	*34.5*	*50.8*	*63.5*	*28.4*	*33.4*	*11.4*	*3/8-16*	*18.5*
205	1	**136913**	TB-SCEZ-100-SHCR	1.48	1.34	3.06	1.39	2.00	2.75	1.32	1.44	0.45	3/8-16	0.78
	25mm	***136956***	*TB-SCEZ-25M-SHCR*	*.67*	*34.0*	*77.7*	*35.3*	*50.8*	*69.9*	*33.5*	*36.5*	*11.4*	*3/8-16*	*19.8*
206	1-3/16	**136914**	TB-SCEZ-103-SHCR	3.55	1.52	3.84	1.50	3.00	3.22	1.57	1.69	0.88	7/16-14	0.94
	1-1/4	**136915**	TB-SCEZ-104S-SHCR											
	30mm	***136957***	*TB-SCEZ-30M-SHCR*	*10.61*	*38.6*	*97.5*	*38.1*	*76.2*	*81.8*	*39.9*	*42.9*	*22.4*	*7/16-14*	*23.9*
207	1-1/4	**136916**	TB-SCEZ-104-SHCR	4.21	1.71	4.15	1.77	3.25	3.66	1.84	1.88	0.75	1/2-13	1.04
	1-7/16	**136917**	TB-SCEZ-107-SHCR											
	35mm	***136958***	*TB-SCEZ-35M-SHCR*	*1.91*	*43.4*	*105.4*	*45.0*	*82.6*	*93.0*	*46.7*	*47.6*	*19.1*	*1/2-13*	*26.4*
208	1-1/2	**136918**	TB-SCEZ-108-SHCR	5.67	1.94	4.51	1.80	3.50	4.00	2.05	2.13	1.00	1/2-13	1.19
	40mm	***136959***	*TB-SCEZ-40M-SHCR*	*2.57*	*49.3*	*114.6*	*45.7*	*88.9*	*101.6*	*52.1*	*54.0*	*25.4*	*1/2-13*	*30.2*
210	1-15/16	**136919**	TB-SCEZ-115-SHCR	5.58	1.94	5.37	1.92	4.00	4.47	2.43	2.25	1.25	5/8-11	1.19
	50mm	***136960***	*TB-SCEZ-50M-SHCR*	*2.53*	*49.3*	*136.4*	*48.8*	*101.6*	*113.5*	*61.7*	*57.2*	*31.8*	*5/8-11*	*30.2*

FEATURES/BENEFITS PAGE B2-3	HOW TO ORDER/NOMENCLATURE PAGE B2-8	SELECTION/DIMENSIONS PAGE B2-24	ACCESSORIES PAGE B2-77

SELECTION/DIMENSIONS

DODGE®



E-Z KLEEN Mounted Bearings

GTEZ NORMAL DUTY STAINLESS STEEL 2-BOLT FLANGE BEARINGS

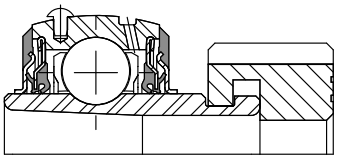

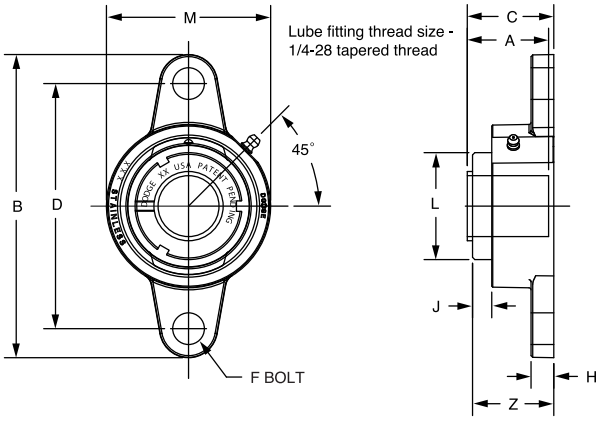

Series	Shaft Size	Complete Unit		Unit Without Adapter		Adapter & Nut Assembly	
		Part No.	Description	Part No.	Description	Part No.	Description
204	3/4	**129355**	F2B-GTEZ-012-SHCR	**129573**	F2B-GTEZ-04-SHCR	**129967**	AN-GT-04-012-CR
	20mm	***129356***	*F2B-GTEZ-20M-SHCR*			***129980***	*AN-GT-04-20M-CR*
205	1	**129357**	F2B-GTEZ-100-SHCR	**129574**	F2B-GTEZ-05-SHCR	**129968**	AN-GT-05-100-CR
	25mm	***129358***	*F2B-GTEZ-25M-SHCR*			***129981***	*AN-GT-05-25M-CR*
206	1-1/8	**@**	F2B-GTEZ-102-SHCR	**129575**	F2B-GTEZ-06-SHCR	**129969**	AN-GT-06-102-CR
	1-3/16	**129359**	F2B-GTEZ-103-SHCR			**129970**	AN-GT-06-103-CR
	1-1/4	**129360**	F2B-GTEZ-104S-SHCR			**129971**	AN-GT-06-104S-CR
	30mm	***129361***	*F2B-GTEZ-30M-SHCR*			***129982***	*AN-GT-06-30M-CR*
207	1-1/4	**129362**	F2B-GTEZ-104-SHCR	**129576**	F2B-GTEZ-07-SHCR	**129972**	AN-GT-07-104-CR
	1-3/8	**065694**	F2B-GTEZ-106-SHCR			**129973**	AN-GT-07-106-CR
	1-7/16	**129363**	F2B-GTEZ-107-SHCR			**129974**	AN-GT-07-107-CR
	35mm	***129364***	*F2B-GTEZ-35M-SHCR*			***129983***	*AN-GT-07-35M-CR*
208	1-1/2	**129365**	F2B-GTEZ-108-SHCR	**129577**	F2B-GTEZ-08-SHCR	**129975**	AN-GT-08-108-CR
	40mm	***129366***	*F2B-GTEZ-40M-SHCR*			***129984***	*AN-GT-08-40M-CR*
210	1-15/16	**129367**	F2B-GTEZ-115-SHCR	**129578**	F2B-GTEZ-10-SHCR	**129978**	AN-GT-10-115-CR
	2	**073008**	F2B-GTEZ-200-SHCR			**129979**	AN-GT-10-200-CR
	50mm	***129368***	*F2B-GTEZ-50M-SHCR*			***129986***	*AN-GT-10-50M-CR*

@ Assembled to order

Series	Shaft Size	Weight lbs *kg*	A	B	C#	D	F Bolt Dia.	H	J	L	M	Z
204	3/4	1.10	1.48	4.38	1.54	3.54	3/8	0.32	0.66	1.50	2.38	1.55
	20mm	*0.49*	*37.6*	*111.3*	*39.1*	*90.0*	*M10*	*8.1*	*16.8*	*38.1*	*60.5*	*39.4*
205	1	1.43	1.46	4.89	1.57	3.89	3/8	0.35	0.61	1.80	2.63	1.58
	25mm	*0.65*	*37.1*	*124.2*	*39.9*	*98.8*	*M10*	*8.9*	*15.5*	*45.7*	*66.8*	*40.1*
206	1-1/8	2.21	1.61	5.51	1.75	4.59	3/8	0.35	0.65	2.08	3.13	1.78
	1-3/16	2.17										
	1-1/4	2.13										
	30mm	*0.98*	*40.9*	*140.0*	*44.5*	*116.5*	*M10*	*8.9*	*16.5*	*52.8*	*79.5*	*45.2*
207	1-1/4	3.12	1.62	6.18	1.80	5.12	1/2	0.42	0.64	2.38	3.50	1.86
	1-3/8	2.99										
	1-7/16	2.95										
	35mm	*1.42*	*41.1*	*157.0*	*45.7*	*130.0*	*M12*	*10.7*	*16.3*	*60.5*	*88.9*	*47.2*
208	1-1/2	3.91	1.84	6.71	2.01	5.65	1/2	0.42	0.67	2.62	3.84	2.02
	40mm	*1.77*	*46.7*	*170.4*	*51.1*	*143.5*	*M12*	*10.7*	*17.0*	*66.5*	*97.5*	*51.3*
210	1-15/16	4.89	1.86	7.48	2.03	6.18	5/8	0.48	0.70	3.13	4.31	2.05
	2	4.85										
	50mm	*2.20*	*47.2*	*190.0*	*51.6*	*157.0*	*M16*	*12.2*	*17.8*	*79.5*	*109.5*	*52.1*

#C dimension will vary slightly depending on true shaft diameter.

DODGE®



E-Z KLEEN Mounted Bearings

SCEZ NORMAL DUTY STAINLESS STEEL 2-BOLT FLANGE BEARINGS

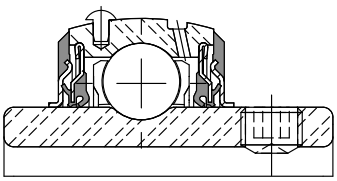

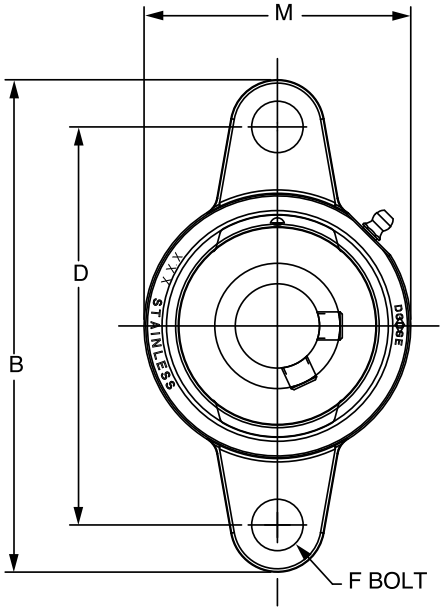

Lube fitting thread size - 1/4-28 tapered thread

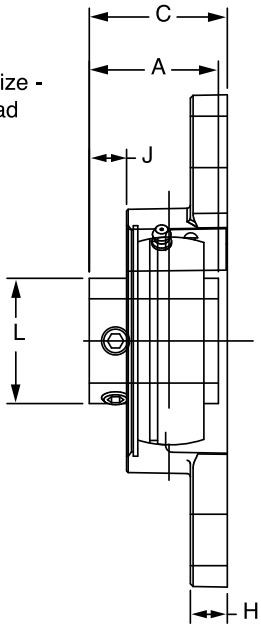

Series	Shaft Size	With Corrosion Resistant Insert		Standard Insert with Flingers		Weight lbs *kg*	A	B	C	D	F Bolt Dia.	H	J	L	M
		Part No.	Description	Part No.	Description										
204	1/2	**073396**	F2B-SCEZ-008L-SHCR*	**@**	F2B-SCEZ-008L-SH	1.04	1.23	4.38	1.25	3.54	3/8	0.32	0.36	1.12	2.38
	5/8	**062994**	F2B-SCEZ-010L-SHCR*	**@**	F2B-SCEZ-010L-SH	0.99									
	3/4	**127681**	F2B-SCEZ-012-SHCR	**056801**	F2B-SCEZ-012-SH	0.95									
	20mm	***127703***	*F2B-SCEZ-20M-SHCR*	**@**	*F2B-SCEZ-20M-SH*	*0.42*	*31.2*	*111.3*	*31.8*	*90.0*	*M10*	*8.1*	*9.1*	*28.4*	*60.5*
205	7/8	**@**	F2B-SCEZ-014-SHCR*	**064000**	F2B-SCEZ-014-SH	1.25	1.34	4.89	1.37	3.89	3/8	0.35	0.39	1.32	2.63
	15/16	**@**	F2B-SCEZ-015-SHCR*	**049686**	F2B-SCEZ-015-SH	1.23									
	1	**127682**	F2B-SCEZ-100-SHCR	**056611**	F2B-SCEZ-100-SH	1.21									
	25mm	***127704***	*F2B-SCEZ-25M-SHCR*	**@**	*F2B-SCEZ-25M-SH*	*0.55*	*34.0*	*124.2*	*34.8*	*98.8*	*M10*	*8.9*	*9.9*	*33.5*	*66.8*
206	1-1/8	**064341**	F2B-SCEZ-102-SHCR	**064255**	F2B-SCEZ-102-SH	1.95	1.52	5.51	1.59	4.59	3/8	0.35	0.46	1.57	3.13
	1-3/16	**127683**	F2B-SCEZ-103-SHCR	**056971**	F2B-SCEZ-103-SH	1.91									
	1-1/4	**127684**	F2B-SCEZ-104S-SHCR	**056612**	F2B-SCEZ-104S-SH	1.87									
	30mm	***127705***	*F2B-SCEZ-30M-SHCR*	**@**	*F2B-SCEZ-30M-SH*	*0.87*	*38.6*	*140.0*	*40.4*	*116.5*	*M10*	*8.9*	*11.7*	*39.9*	*79.5*
207	1-1/4	**127685**	F2B-SCEZ-104-SHCR	**056802**	F2B-SCEZ-104-SH	2.64	1.71	6.18	1.76	5.12	1/2	0.42	0.55	1.84	3.50
	1-3/8	**056734**	F2B-SCEZ-106-SHCR*	**@**	F2B-SCEZ-106-SH	2.53									
	1-7/16	**127686**	F2B-SCEZ-107-SHCR	**056803**	F2B-SCEZ-107-SH	2.47									
	35mm	***127706***	*F2B-SCEZ-35M-SHCR*	**@**	*F2B-SCEZ-35M-SH*	*1.15*	*43.4*	*157.0*	*44.7*	*130.0*	*M12*	*10.7*	*14.0*	*46.7*	*88.9*
208	1-1/2	**127687**	F2B-SCEZ-108-SHCR	**056804**	F2B-SCEZ-108-SH	3.40	1.94	6.71	1.97	5.65	1/2	0.42	0.63	2.05	3.84
	1-5/8	**068283**	F2B-SCEZ-110-SHCR	**—**	—	3.10									
	40mm	***127707***	*F2B-SCEZ-40M-SHCR*	***075248***	*F2B-SCEZ-40M-SH*	*1.50*	*49.3*	*170.4*	*50.0*	*143.5*	*M12*	*10.7*	*16.0*	*52.1*	*97.5*
210	1-11/16	**@**	F2B-SCMEZ-111-SHCR*	**056552**	F2B-SCMEZ-111-SH	4.21	1.94	7.48	1.98	6.18	5/8	0.48	0.63	2.43	4.31
	1-15/16	**127688**	F2B-SCEZ-115-SHCR	**056805**	F2B-SCEZ-115-SH	4.17									
	2	**062913**	F2B-SCEZ-200-SHCR	**056964**	F2B-SCEZ-200-SH	4.13									
	50mm	***127708***	*F2B-SCEZ-50M-SHCR*	**@**	*F2B-SCEZ-50M-SH*	*1.87*	*49.3*	*190.0*	*50.3*	*157.0*	*M16*	*12.2*	*16.0*	*61.7*	*109.5*

@ Assembled to order
*20 piece minimum

SELECTION/DIMENSIONS

DODGE®



E-Z KLEEN Mounted Bearings
DLEZ NORMAL DUTY STAINLESS STEEL 2-BOLT FLANGE BEARINGS

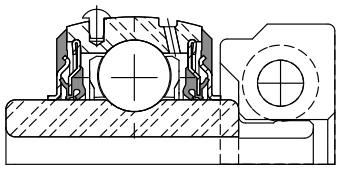

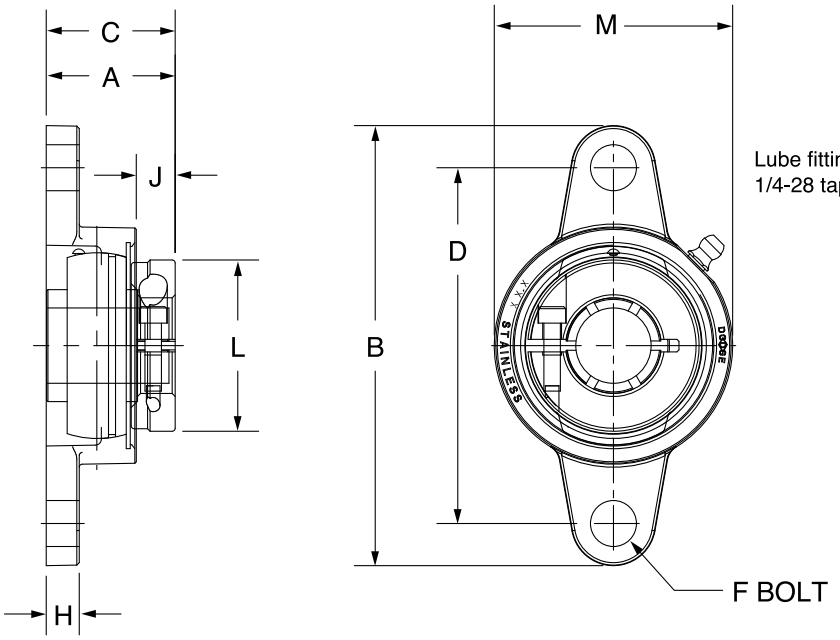

Lube fitting thread size - 1/4-28 tapered thread

Series	Shaft Size	Part No.	Description	Weight lbs kg	A	B	C	D	F Bolt Dia.	H	J	L	M
204	3/4	**127723**	F2B-DLEZ-012-SHCR	1.10	1.28	4.38	1.30	3.54	3/8	0.32	0.41	1.71	2.38
	20mm	***127745***	*F2B-DLEZ-20M-SHCR*	*0.49*	*32.5*	*111.3*	*33.0*	*90.0*	*M10*	*8.1*	*10.4*	*43.4*	*60.5*
205	7/8	**@**	F2B-DLEZ-014-SHCR*	1.51	1.44	4.89	1.46	3.89	3/8	0.35	0.48	1.99	2.63
	15/16	**@**	F2B-DLEZ-015-SHCR*	1.47									
	1	**127724**	F2B-DLEZ-100-SHCR	1.43									
	25mm	***127746***	*F2B-DLEZ-25M-SHCR*	*0.65*	*36.6*	*124.2*	*37.1*	*98.8*	*M10*	*8.9*	*12.2*	*50.5*	*66.8*
206	1-1/8	**076584**	F2B-DLEZ-102-SHCR*	2.21	1.56	5.51	1.63	4.59	3/8	0.35	0.50	2.22	3.13
	1-3/16	**127725**	F2B-DLEZ-103-SHCR	2.17									
	1-1/4	**127726**	F2B-DLEZ-104S-SHCR	2.13									
	30mm	***127747***	*F2B-DLEZ-30M-SHCR*	*0.98*	*39.6*	*140.0*	*41.4*	*116.5*	*M10*	*8.9*	*12.7*	*56.4*	*79.5*
207	1-1/4	**127727**	F2B-DLEZ-104-SHCR	3.12	1.75	6.18	1.80	5.12	1/2	0.42	0.58	2.69	3.50
	1-3/8	**@**	F2B-DLEZ-106-SHCR*	2.99									
	1-7/16	**127728**	F2B-DLEZ-107-SHCR	2.95									
	35mm	***127748***	*F2B-DLEZ-35M-SHCR*	*1.42*	*44.5*	*157.0*	*45.7*	*130.0*	*M12*	*10.7*	*14.7*	*68.3*	*88.9*
208	1-1/2	**127729**	F2B-DLEZ-108-SHCR	3.91	2.01	6.71	2.05	5.65	1/2	0.42	0.70	2.74	3.84
	40mm	***127749***	*F2B-DLEZ-40M-SHCR*	*1.77*	*51.1*	*170.4*	*52.1*	*143.5*	*M12*	*10.7*	*17.8*	*69.6*	*97.5*
210	1-11/16	**@**	F2B-DLMEZ-111-SHCR*	4.89	2.01	7.48	2.05	6.18	5/8	0.48	0.70	3.24	4.31
	1-15/16	**127730**	F2B-DLEZ-115-SHCR	4.85									
	50mm	***127750***	*F2B-DLEZ-50M-SHCR*	*2.20*	*51.1*	*190.0*	*52.1*	*157.0*	*M16*	*12.2*	*17.8*	*82.3*	*109.5*

@ Assembled to order
*20 piece minimum

DODGE®



E-Z KLEEN Mounted Bearings

SCEZ LF SHCR NORMAL DUTY STAINLESS STEEL 3-BOLT FLANGE BEARINGS

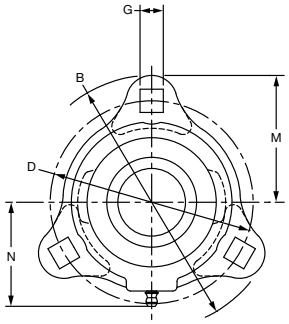

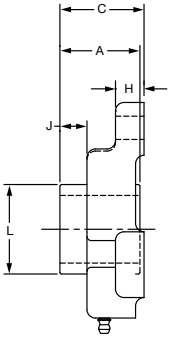

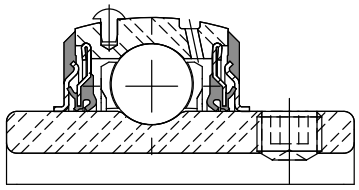

Series	Shaft Size	Corrosion Resistant Insert		Weight lbs. kgs.	A	B	C	D	G	H	J	L	M	N
		Part No.	Description											
204	3/4	**136927**	LF-SCEZ-012-SHCR	.64	1.02	3.56	1.24	2.81	0.34	0.58	0.37	1.12	1.78	1.55
	20 mm	***136966***	*LF-SCEZ-20M-SHCR*	*.29*	*25.9*	*90.4*	*31.6*	*71.4*	*8.6*	*14.7*	*9.3*	*28.4*	*45.2*	*39.4*
205	1	**136928**	LF-SCEZ-100-SHCR	.80	1.06	3.75	1.34	3.00	0.34	0.50	0.37	1.32	1.88	1.67
	25 mm	***136967***	*LF-SCEZ-25M-SHCR*	*.36*	*26.8*	*95.3*	*34.1*	*76.2*	*8.6*	*12.7*	*9.5*	*33.5*	*47.8*	*42.4*
206	1-3/16	**136929**	LF-SCEZ-103-SHCR	1.23	1.26	4.44	1.56	3.56	0.41	0.61	0.48	1.57	2.22	1.98
	1-1/4	**136930**	LF-SCEZ-104S-SHCR											
	30 mm	***136968***	*LF-SCEZ-30M-SHCR*	*.56*	*32.0*	*112.8*	*39.6*	*90.4*	*10.4*	*15.5*	*12.1*	*39.9*	*56.4*	*50.3*
207	1-1/4	**136931**	LF-SCEZ-104-SHCR	1.73	1.40	4.81	1.73	3.94	0.41	0.67	0.53	1.84	2.41	2.09
	1-7/16	**136932**	LF-SCEZ-107-SHCR											
	35 mm	***136969***	*LF-SCEZ-35M-SHCR*	*.78*	*35.7*	*122.2*	*44.0*	*100.1*	*10.4*	*17.1*	*13.6*	*46.7*	*61.2*	*53.1*

E-Z KLEEN Mounted Bearings

SCEZ SHCR NORMAL DUTY STAINLESS STEEL HOUSED 2-BOLT FLANGE BEARINGS

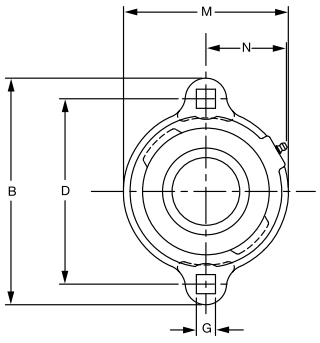

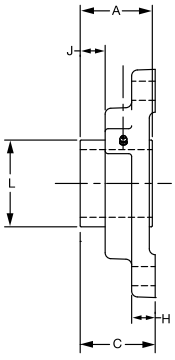

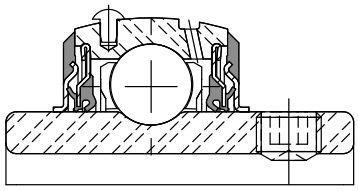

Series	Shaft Size	Corrosion Resistant Insert		Weight lbs. kgs.	A	B	C	D	G	H	J	L	M	N
		Part No.	Description											
204	3/4	**136933**	LFT-SCEZ-012-SHCR	.68	1.02	3.56	1.24	2.81	0.34	0.58	0.37	1.12	2.38	1.34
	20 mm	***136970***	*LFT-SCEZ-20M-SHCR*	*.31*	*25.9*	*90.4*	*31.6*	*71.4*	*8.6*	*14.7*	*9.3*	*28.4*	*60.5*	*34.0*
205	1	**136934**	LFT-SCEZ-100-SHCR	.84	1.06	3.75	1.34	3.00	0.34	0.50	0.37	1.32	2.63	1.44
	25 mm	***136971***	*LFT-SCEZ-25M-SHCR*	*.38*	*26.8*	*95.3*	*34.1*	*76.2*	*8.6*	*12.7*	*9.5*	*33.5*	*66.8*	*36.6*
206	1-3/16	**136935**	LFT-SCEZ-103-SHCR	1.28	1.26	4.44	1.56	3.56	0.41	0.61	0.48	1.57	3.25	1.72
	1-1/4	**136936**	LFT-SCEZ-104S-SHCR											
	30 mm	***136972***	*LFT-SCEZ-30M-SHCR*	*.58*	*32.0*	*112.8*	*39.6*	*90.4*	*10.4*	*15.5*	*12.1*	*39.9*	*82.6*	*43.7*
207	1-1/4	**136937**	LFT-SCEZ-104-SHCR	1.77	1.40	4.81	1.73	3.94	0.41	0.67	0.53	1.84	3.50	1.83
	1-7/16	**136938**	LFT-SCEZ-107-SHCR											
	35 mm	***136973***	*LFT-SCEZ-35M-SHCR*	*.80*	*35.7*	*122.2*	*44.0*	*100.1*	*10.4*	*17.1*	*13.6*	*46.7*	*88.9*	*46.5*

FEATURES/BENEFITS PAGE B2-3	HOW TO ORDER/NOMENCLATURE PAGE B2-8	SELECTION/DIMENSIONS PAGE B2-24	ACCESSORIES PAGE B2-77

SELECTION/DIMENSIONS

E-Z KLEEN Ball Bearings

SCEZ SHCR NORMAL DUTY STAINLESS STEEL FLANGE BRACKET BEARINGS

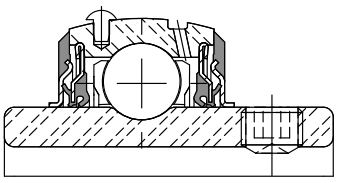

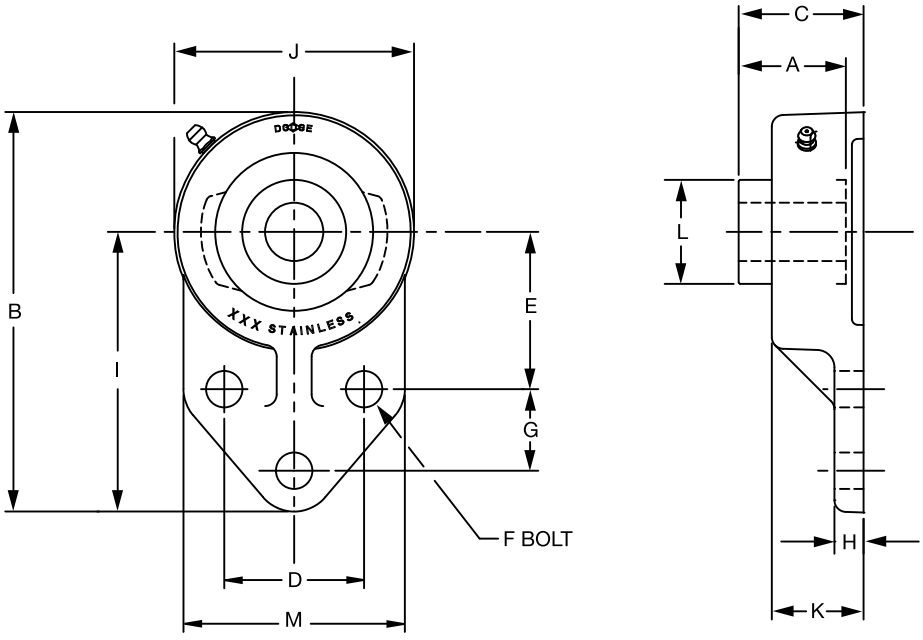

Series	Shaft Size	Corrosion Resistant Insert		Weight lbs. kgs.	A	B	C	D	E	F Bolt Dia	G	H	I	J	K	L	M
		Part No.	Description														
204	3/4	**136920**	FB-SCEZ-012-SHCR	1.00	1.23	4.19	1.25	1.50	1.69	3/8	0.88	0.31	3.00	2.38	0.90	1.12	2.38
	20mm	***136961***	*FB-SCEZ-20M-SHCR*	*.45*	*31.2*	*106.4*	*31.8*	*38.1*	*42.9*	*M10*	*22.4*	*7.9*	*76.2*	*60.5*	*22.9*	*28.4*	*60.5*
205	1	**136921**	FB-SCEZ-100-SHCR	1.26	1.34	4.69	1.37	1.63	1.81	3/8	1.13	0.38	3.38	2.63	0.98	1.32	2.50
	25mm	***136962***	*FB-SCEZ-25M-SHCR*	*.52*	*34.0*	*119.1*	*34.8*	*41.4*	*46.0*	*M10*	*28.7*	*9.7*	*85.9*	*66.8*	*24.9*	*33.5*	*63.5*
206	1-3/16	**136922**	FB-SCEZ-103-SHCR	1.96	1.52	5.31	1.59	1.88	2.06	3/8	1.25	0.38	3.75	3.13	1.14	1.57	2.75
	1-1/4	**136923**	FB-SCEZ-104S-SHCR														
	30mm	***136963***	*FB-SCEZ-30M-SHCR*	*.89*	*38.6*	*134.9*	*40.4*	*47.8*	*52.3*	*M10*	*31.8*	*9.7*	*95.3*	*79.5*	*29.0*	*39.9*	*69.9*
207	1-1/4	**136924**	FB-SCEZ-104-SHCR	2.87	1.71	6.00	1.76	2.00	2.38	1/2	1.25	0.50	4.25	3.50	1.22	1.84	3.25
	1-7/16	**136925**	FB-SCEZ-107-SHCR														
	35mm	***136964***	*FB-SCEZ-35M-SHCR*	*1.3*	*43.4*	*152.4*	*44.7*	*50.8*	*60.5*	*M12*	*31.8*	*12.7*	*108.0*	*88.9*	*31.0*	*46.7*	*82.6*
210	1-15/16	**136926**	FB-SCEZ-115-SHCR	4.47	1.94	7.34	1.98	2.75	2.94	1/2	1.63	0.50	5.19	4.31	1.35	2.43	4.00
	2	**@**	FB-SCEZ-200-SHCR														
	50mm	***136965***	*FB-SCEZ-50M-SHCR*	*2.03*	*49.3*	*186.4*	*50.3*	*69.9*	*74.7*	*M12*	*41.4*	*12.7*	*131.8*	*109.5*	*34.3*	*61.7*	*101.6*

DODGE®



E-Z KLEEN Mounted Bearings

GTEZ NORMAL DUTY STAINLESS STEEL 4-BOLT FLANGE BEARINGS

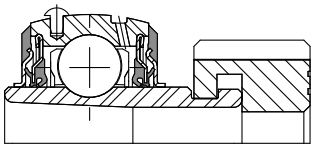

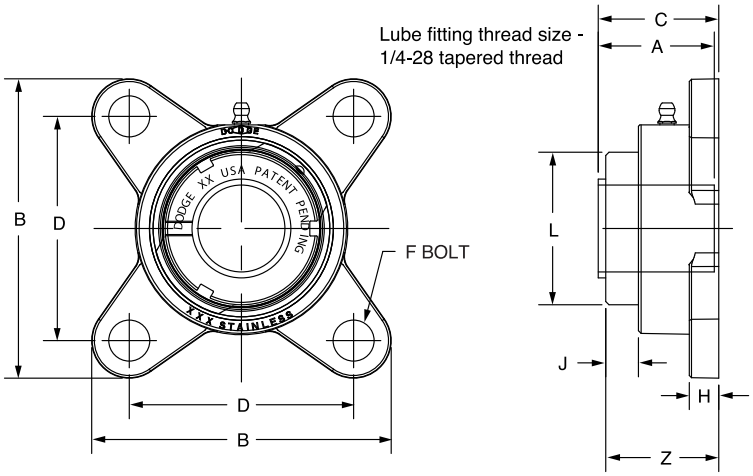

Series	Shaft Size	Complete Unit		Unit Without Adapter		Adapter & Nut Assembly	
		Part No.	Description	Part No.	Description	Part No.	Description
204	3/4	**129721**	F4B-GTEZ-012-SHCR	**129567**	F4B-GTEZ-04-SHCR	**129967**	AN-GT-04-012-CR
	20mm	***129722***	*F4B-GTEZ-20M-SHCR*			***129980***	*AN-GT-04-20M-CR*
205	1	**129723**	F4B-GTEZ-100-SHCR	**129568**	F4B-GTEZ-05-SHCR	**129968**	AN-GT-05-100-CR
	25mm	***129724***	*F4B-GTEZ-25M-SHCR*			***129981***	*AN-GT-05-25M-CR*
206	1 -1/8	**075913**	F4B-GTEZ-102-SHCR	**129569**	F4B-GTEZ-06-SHCR	**129969**	AN-GT-06-102-CR
	1 -3/16	**129725**	F4B-GTEZ-103-SHCR			**129970**	AN-GT-06-103-CR
	1 -1/4	**129726**	F4B-GTEZ-104S-SHCR			**129971**	AN-GT-06-104S-CR
	30mm	***129727***	*F4B-GTEZ-30M-SHCR*			***129982***	*AN-GT-06-30M-CR*
207	1 -1/4	**129728**	F4B-GTEZ-104-SHCR	**129570**	F4B-GTEZ-07-SHCR	**129972**	AN-GT-07-104-CR
	1 -3/8	**064993**	F4B-GTEZ-106-SHCR			**129973**	AN-GT-07-106-CR
	1 -7/16	**129729**	F4B-GTEZ-107-SHCR			**129974**	AN-GT-07-107-CR
	35mm	***129730***	*F4B-GTEZ-35M-SHCR*			***129983***	*AN-GT-07-35M-CR*
208	1 -1/2	**129731**	F4B-GTEZ-108-SHCR	**129571**	F4B-GTEZ-08-SHCR	**129975**	AN-GT-08-108-CR
	40mm	***129732***	*F4B-GTEZ-40M-SHCR*			***129984***	*AN-GT-08-40M-CR*
210	1-15/16	**129733**	F4B-GTEZ-115-SHCR	**129572**	F4B-GTEZ-10-SHCR	**129978**	AN-GT-10-115-CR
	2	**062901**	F4B-GTEZ-200-SHCR			**129979**	AN-GT-10-200-CR
	50mm	***129734***	*F4B-GTEZ-50M-SHCR*			***129986***	*AN-GT-10-50M-CR*

@ Assembled to order

Series	Shaft Size	Weight lbs kg	A	B	C#	D	F Bolt Dia.	H	J	L	Z
204	3/4	1.23	1.48	3.35	1.54	2.51	3/8	0.34	0.66	1.50	1.55
	20mm	*0.55*	*37.6*	*85.1*	*39.1*	*63.6*	*M10*	*8.6*	*16.8*	*38.1*	*39.4*
205	1	1.69	1.46	3.75	1.57	2.75	3/8	0.37	0.61	1.80	1.58
	25mm	*0.73*	*37.1*	*95.3*	*39.9*	*69.9*	*M10*	*9.4*	*15.5*	*45.7*	*40.1*
206	1 -1/8 1 -3/16 1 -1/4	2.41	1.61	4.16	1.75	3.24	3/8	0.37	0.65	2.08	1.78
	30mm	*1.07*	*40.9*	*105.7*	*44.5*	*82.4*	*M10*	*9.4*	*16.5*	*52.8*	*45.2*
207	1 -1/4 1 -3/8 1 -7/16	3.42	1.62	4.68	1.80	3.62	1/2	0.42	0.64	2.38	1.86
	35mm	*1.56*	*41.1*	*118.9*	*45.7*	*92.0*	*M12*	*10.7*	*16.3*	*60.5*	*47.2*
208	1 -1/2	4.21	1.84	5.06	2.01	4.00	1/2	0.43	0.67	2.62	2.02
	40mm	*1.91*	*46.7*	*128.5*	*51.1*	*101.5*	*M12*	*10.9*	*17.0*	*66.5*	*51.3*
210	1-15/16 2	5.33	1.86	5.67	2.03	4.37	5/8	0.49	0.70	3.13	2.05
	50mm	*2.39*	*47.2*	*144.0*	*51.6*	*111.0*	*M16*	*12.4*	*17.8*	*79.5*	*52.1*

#C dimension will vary slightly depending on true shaft diameter.

FEATURES/BENEFITS PAGE B2-3	HOW TO ORDER/NOMENCLATURE PAGE B2-8	SELECTION/DIMENSIONS PAGE B2-24	ACCESSORIES PAGE B2-77

SELECTION/DIMENSIONS

DODGE®



E-Z KLEEN Mounted Bearings

SCEZ NORMAL DUTY STAINLESS STEEL 4-BOLT FLANGE BEARINGS

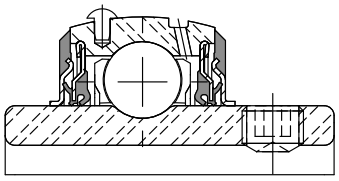

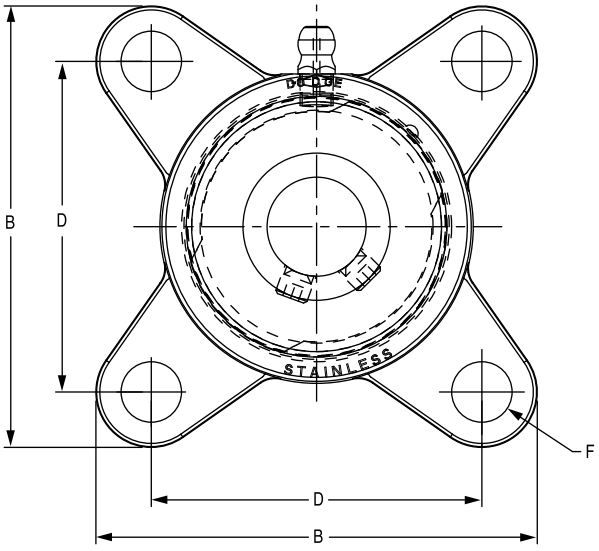

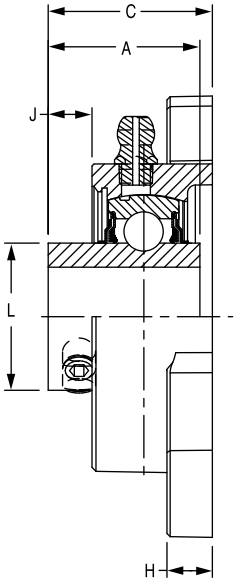

Series	Shaft Size	With Corrosion Resistant Insert		With Insert With Flingers		Weight lbs kg	A	B	C	D	F Bolt Dia.	H	J	L
		Part No.	Description	Part No.	Description									
204	1/2	@	F4B-SCEZ-008L-SHCR*	@	F4B-SCEZ-008L-SH	1.16	1.23	3.35	1.25	2.51	3/8	0.34	0.34	1.12
	5/8	@	F4B-SCEZ-010L-SHCR*	@	F4B-SCEZ-010L-SH	1.12								
	3/4	**127689**	F4B-SCEZ-012-SHCR	**056806**	F4B-SCEZ-012-SH	1.08								
	20mm	***127709***	*F4B-SCEZ-20M-SHCR*	@	*F4B-SCEZ-20M-SH*	*0.49*	*31.2*	*85.1*	*31.8*	*63.6*	*M10*	*8.6*	*8.6*	*28.4*
205	7/8	**065600**	F4B-SCEZ-014-SHCR*	@	F4B-SCEZ-014-SH	1.47	1.34	3.75	1.37	2.75	3/8	0.37	0.38	1.32
	15/16	@	F4B-SCEZ-015-SHCR*	@	F4B-SCEZ-015-SH	1.43								
	1	**127690**	F4B-SCEZ-100-SHCR	**056593**	F4B-SCEZ-100-SH	1.39								
	25mm	***127710***	*F4B-SCEZ-25M-SHCR*	@	*F4B-SCEZ-25M-SH*	*0.63*	*34.0*	*95.3*	*34.8*	*69.9*	*M10*	*9.4*	*9.7*	*33.5*
206	1-1/8	@	F4B-SCEZ-102-SHCR*	**049477**	F4B-SCEZ-102-SH	2.13	1.52	4.16	1.59	3.24	3/8	0.37	0.45	1.57
	1-3/16	**127691**	F4B-SCEZ-103-SHCR	**056807**	F4B-SCEZ-103-SH	2.09								
	1-1/4	**127692**	F4B-SCEZ-104S-SHCR	@	F4B-SCEZ-104S-SH	2.05								
	30mm	***127711***	*F4B-SCEZ-30M-SHCR*	@	*F4B-SCEZ-30M-SH*	*0.95*	*38.6*	*105.7*	*40.4*	*82.4*	*M10*	*9.4*	*11.4*	*39.9*
207	1-1/4	**127693**	F4B-SCEZ-104-SHCR	**056633**	F4B-SCEZ-104-SH	2.95	1.71	4.68	1.76	3.62	1/2	0.42	0.55	1.84
	1-3/8	**062835**	F4B-SCEZ-106-SHCR*	@	F4B-SCEZ-106-SH	2.83								
	1-7/16	**127694**	F4B-SCEZ-107-SHCR	**056808**	F4B-SCEZ-107-SH	2.78								
	35mm	***127712***	*F4B-SCEZ-35M-SHCR*	@	*F4B-SCEZ-35M-SH*	*1.29*	*43.4*	*118.9*	*44.7*	*92.0*	*M12*	*10.7*	*14.0*	*46.7*
208	1-1/2	**127695**	F4B-SCEZ-108-SHCR	**056809**	F4B-SCEZ-108-SH	3.70	1.94	5.06	1.97	4.00	1/2	0.43	0.62	2.05
	1-5/8	@	F4B-SCEZ-110-SHCR*	**062340**	F4B-SCEZ-110-SH									
	40mm	***127713***	*F4B-SCEZ-40M-SHCR*	@	*F4B-SCEZ-40M-SH*	*1.64*	*49.3*	*128.5*	*50.0*	*101.5*	*M12*	*10.9*	*15.7*	*52.1*
210	1-11/16	@	F4B-SCMEZ-111-SHCR*	@	F4B-SCMEZ-111-SH	4.64	1.94	5.67	1.98	4.37	5/8	0.49	0.62	2.43
	1-3/4	@	F4B-SCMEZ-112-SHCR*	**065945**	F4B-SCMEZ-112-SH	4.40								
	1-15/16	**127696**	F4B-SCEZ-115-SHCR	**056810**	F4B-SCEZ-115-SH	4.60								
	2	**062542**	F4B-SCEZ-200-SHCR	@	F4B-SCEZ-200-SH	4.56								
	50mm	***127714***	*F4B-SCEZ-50M-SHCR*	@	*F4B-SCEZ-50M-SH*	*2.07*	*49.3*	*144.0*	*50.3*	*111.0*	*M16*	*12.4*	*15.7*	*61.7*

@ Assembled to order *20 piece minimum

DODGE®



E-Z KLEEN Mounted Bearings
DLEZ NORMAL DUTY STAINLESS STEEL 4-BOLT FLANGE BEARINGS

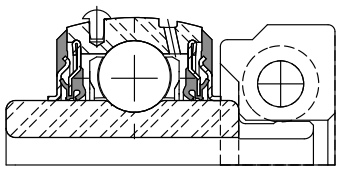

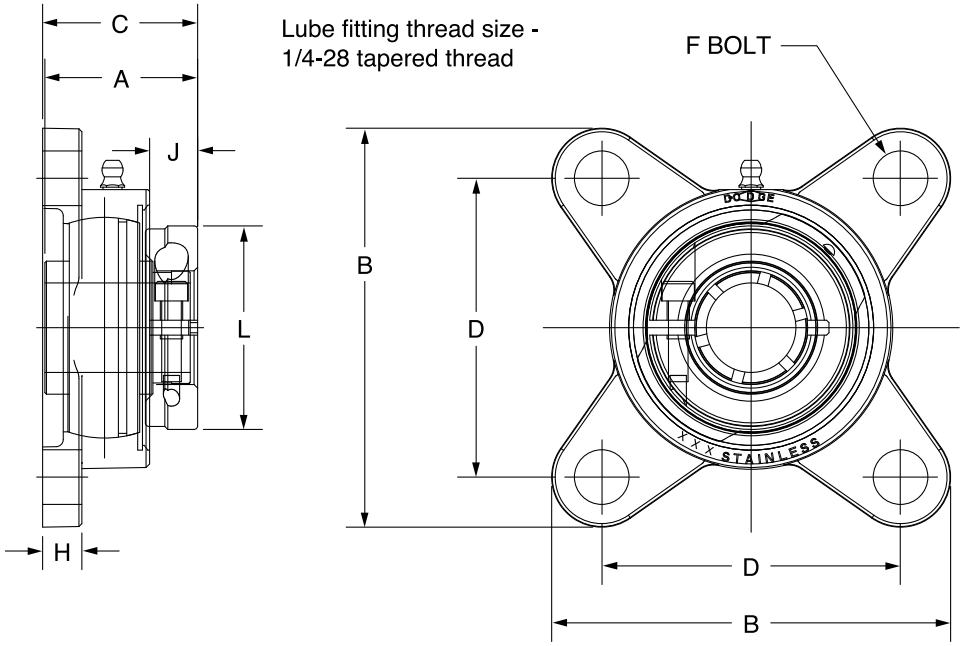

Series	Shaft Size	Part No.	Description	Weight lbs kg	A	B	C	D	F Bolt Dia.	H	J	L
204	3/4	**127731**	F4B-DLEZ-012-SHCR	1.23	1.28	3.35	1.30	2.51	3/8	0.34	0.41	1.71
	20mm	***127751***	*F4B-DLEZ-20M-SHCR*	*0.55*	*32.5*	*85.1*	*33.0*	*63.6*	*M10*	*8.6*	*10.4*	*43.4*
205	7/8	@	F4B-DLEZ-014-SHCR*	1.69	1.44	3.75	1.46	2.75	3/8	0.37	0.48	1.99
	15/16	@	F4B-DLEZ-015-SHCR*	1.65								
	1	**127732**	F4B-DLEZ-100-SHCR	1.61								
	25mm	***127752***	*F4B-DLEZ-25M-SHCR*	*0.73*	*36.6*	*95.3*	*37.1*	*69.9*	*M10*	*9.4*	*12.2*	*50.5*
206	1-1/8	@	F4B-DLEZ-102-SHCR*	2.41	1.56	4.16	1.63	3.24	3/8	0.37	0.50	2.22
	1-3/16	**127733**	F4B-DLEZ-103-SHCR	2.36								
	1-1/4	**127734**	F4B-DLEZ-104S-SHCR	2.31								
	30mm	***127753***	*F4B-DLEZ-30M-SHCR*	*1.07*	*39.6*	*105.7*	*41.4*	*82.4*	*M10*	*9.4*	*12.7*	*56.4*
207	1-1/4	**127735**	F4B-DLEZ-104-SHCR	3.42	1.75	4.68	1.80	3.62	1/2	0.42	0.58	2.69
	1-3/8	@	F4B-DLEZ-106-SHCR*	3.29								
	1-7/16	**127736**	F4B-DLEZ-107-SHCR	3.25								
	35mm	***127754***	*F4B-DLEZ-35M-SHCR*	*1.56*	*44.5*	*118.9*	*45.7*	*92.0*	*M12*	*10.7*	*14.7*	*68.3*
208	1-1/2	**127737**	F4B-DLEZ-108-SHCR	4.21	2.01	5.06	2.05	4.00	1/2	0.43	0.70	2.74
	40mm	***127755***	*F4B-DLEZ-40M-SHCR*	*1.91*	*51.1*	*128.5*	*52.1*	*101.5*	*M12*	*10.9*	*17.8*	*69.6*
210	1-11/16	@	F4B-DLEZM-111-SHCR*	5.33	2.01	5.67	2.05	4.37	5/8	0.49	0.70	3.24
	1-15/16	**127738**	F4B-DLEZ-115-SHCR	5.28								
	50mm	***127756***	*F4B-DLEZ-50M-SHCR*	*2.39*	*51.1*	*144.0*	*52.1*	*111.0*	*M16*	*12.4*	*17.8*	*82.3*

@ Assembled to order *20 piece minimum

SELECTION/DIMENSIONS

DODGE®



E-Z KLEEN Mounted Bearings

SCEZ SHCR NORMAL DUTY STAINLESS STEEL NARROW SLOT TAKE-UP BEARINGS

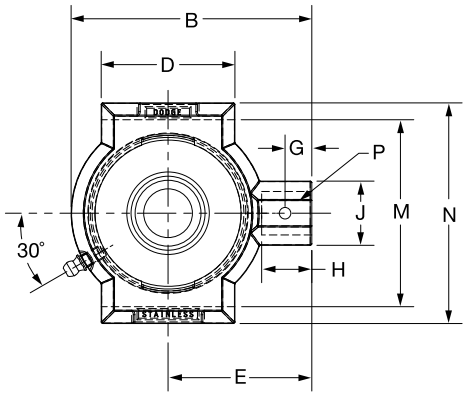

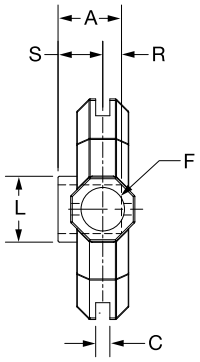

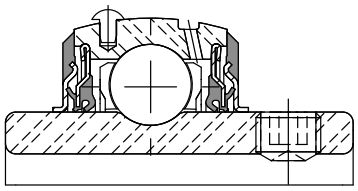

Series	Shaft Size	Standard Part No.	Standard Description	Weight lbs. kgs.	Take-Up Frame No. Ref.	A	B	C	D	E
204	3/4	**136939**	NSTU-SCEZ-012-SHCR	1.16	NS210	1.23	3.49	0.265	1.50	2.19
	20mm	***136974***	*NSTU-SCEZ-20M-SHCR*	*.53*		*31.2*	*88.6*	*6.73*	*38.1*	*55.6*
205	1	**136940**	NSTU-SCEZ-100-SHCR	1.06	NS210	1.34	3.49	0.265	1.50	2.19
	25mm	***136975***	*NSTU-SCEZ-25M-SHCR*	*.48*		*34.0*	*88.6*	*6.73*	*38.1*	*55.6*
206	1-3/16	**136941**	NSTU-SCEZ-103-SHCR	2.51	NS308	1.52	4.50	0.265	2.50	2.69
	1-1/4	**136942**	NSTU-SCEZ-104S-SHCR							
	30mm	***136976***	*NSTU-SCEZ-30M-SHCR*	*1.14*		*38.6*	*114.3*	*6.73*	*63.5*	*68.3*
207	1-1/4	**136943**	NSTU-SCEZ-104-SHCR	2.42	NS308	1.71	4.50	0.265	2.50	2.69
	1-7/16	**136944**	NSTU-SCEZ-107-SHCR							
	35mm	***136977***	*NSTU-SCEZ-35M-SHCR*	*1.10*		*43.4*	*114.3*	*6.73*	*63.5*	*68.3*
208	1-1/2	**136945**	NSTU-SCEZ-108-SHCR	4.16	NS400	1.94	5.38	0.328	3.00	3.25
	40mm	***136978***	*NSTU-SCEZ-40M-SHCR*	*1.89*		*49.3*	*136.7*	*8.33*	*76.2*	*82.6*
210	1-15/16	**136946**	NSTU-SCEZ-115-SHCR	3.87	NS400	1.94	5.50	0.328	3.00	3.25
	2	**136997**	NSTU-SCEZ-200-SHCR							
	50mm	***136979***	*NSTU-SCEZ-50M-SHCR*	*1.76*		*49.3*	*139.7*	*8.33*	*76.2*	*82.6*

@ Assembled to order

Series	Shaft Size	F Screw Dia	G	H	J	L	M	N	P Pin Dia	R	S
204	3/4	3/4	0.44	0.88	1.20	1.12	2.635/2.605	3.13	0.32	0.50	0.73
	20mm	*19.1*	*11.2*	*22.4*	*30.5*	*28.4*	*66.93/66.17*	*79.5*	*8.1*	*12.7*	*18.5*
205	1	3/4	0.44	0.88	1.20	1.32	2.635/2.605	3.13	0.32	0.56	0.78
	25mm	*19.1*	*11.2*	*22.4*	*30.5*	*33.5*	*66.93/66.17*	*79.5*	*8.1*	*14.2*	*19.8*
206	1-3/16	3/4	0.50	0.94	1.20	1.57	3.510/3.480	4.13	0.32	0.58	0.94
	1-1/4										
	30mm	*19.1*	*12.7*	*23.9*	*30.5*	*39.9*	*89.15/88.39*	*104.9*	*8.1*	*14.7*	*23.9*
207	1-1/4	3/4	0.50	0.94	1.20	1.84	3.510/3.480	4.13	0.32	0.67	1.04
	1-7/16										
	35mm	*19.1*	*12.7*	*23.8*	*30.5*	*46.7*	*89.15/88.39*	*104.9*	*8.1*	*17.0*	*26.4*
208	1-1/2	1	0.66	1.16	1.50	2.05	4.015/3.985	4.75	0.38	0.75	1.19
	40mm	*25.4*	*16.8*	*29.5*	*38.1*	*52.1*	*101.98/101.22*	*120.7*	*9.7*	*19.1*	*30.2*
210	1-15/16	1	0.66	1.16	1.50	2.43	4.015/3.985	4.75	0.38	0.75	1.19
	2										
	50mm	*25.4*	*16.8*	*29.5*	*38.1*	*61.7*	*101.98/101.22*	*120.7*	*9.7*	*19.1*	*30.2*

DODGE®

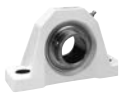

E-Z KLEEN Mounted Bearings

SCEZ SHCR NORMAL DUTY STAINLESS STEEL WIDE SLOT TAKE-UP BEARINGS

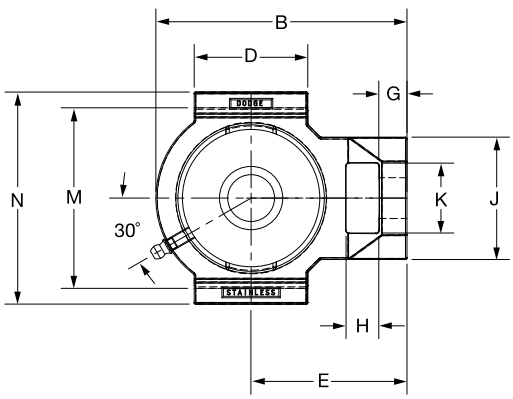

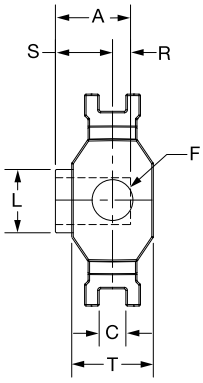

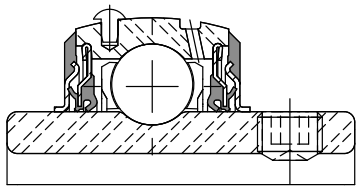

Series	Shaft Size	Standard Part No.	Standard Description	Weight lbs. kgs.	Take-Up Frame No. Ref.	A	B	C	D	E
204	3/4	**136947**	WSTU-SCEZ-012-SHCR	2.14	WS300	1.23	3.97	0.530	2.20	2.56
	20mm	***136980***	*WSTU-SCEZ-20M-SHCR*	*.97*		*31.2*	*100.8*	*13.46*	*55.9*	*65.0*
205	1	**136948**	WSTU-SCEZ-100-SHCR	2.03	WS300	1.34	3.97	0.530	2.20	2.56
	25mm	***136981***	*WSTU-SCEZ-25M-SHCR*	*.92*		*34.0*	*100.8*	*13.46*	*55.9*	*65.0*
206	1-3/16	**136949**	WSTU-SCEZ-103-SHCR	3.31	WS308	1.52	4.99	0.530	2.26	3.10
	1-1/4	**136950**	WSTU-SCEZ-104S-SHCR							
	30mm	***136982***	*WSTU-SCEZ-30M-SHCR*	*1.50*		*38.6*	*126.7*	*13.46*	*57.4*	*78.7*
207	1-1/4	**136951**	WSTU-SCEZ-104-SHCR	3.21	WS308	1.71	4.99	0.530	2.26	3.10
	1-7/16	**136952**	WSTU-SCEZ-107-SHCR							
	35mm	***136983***	*WSTU-SCEZ-35M-SHCR*	*1.46*		*43.4*	*126.7*	*13.46*	*57.4*	*78.7*
208	1-1/2	**136953**	WSTU-SCEZ-108-SHCR	4.60	WS400	1.94	5.63	0.688	3.25	3.50
	40mm	***136984***	*WSTU-SCEZ-40M-SHCR*	*2.09*		*49.3*	*143.0*	*17.48*	*82.6*	*88.9*
210	1-15/16	**136954**	WSTU-SCEZ-115-SHCR	4.12	WS400	1.94	5.63	0.688	3.25	3.50
	2	**136998**	WSTU-SCEZ-200-SHCR							
	50mm	***136985***	*WSTU-SCEZ-50M-SHCR*	*1.87*		*49.3*	*143.0*	*17.48*	*82.6*	*88.9*

@ Assembled to Order

Series	Shaft Size	F Screw Dia	G	H	J	K	L	M	N	R	S	T
204	3/4	5/8	0.56	0.65	2.12	1.15	1.12	3.025/2.995	3.63	0.50	0.73	1.38
	20mm	*15.9*	*14.2*	*16.5*	*53.8*	*29.2*	*28.4*	*76.84/76.07*	*92.2*	*12.7*	*18.5*	*35.1*
205	1	5/8	0.56	0.65	2.12	1.15	1.32	3.025/2.995	3.63	0.56	0.78	1.38
	25mm	*15.9*	*14.2*	*16.5*	*53.8*	*29.2*	*33.5*	*76.84/76.07*	*92.2*	*14.2*	*19.8*	*35.1*
206	1-3/16	3/4	0.56	0.65	2.43	1.39	1.57	3.540/3.510	4.20	0.58	0.94	1.62
	1-1/4											
	30mm	*19.1*	*14.2*	*16.5*	*61.7*	*35.3*	*39.9*	*89.92/89.15*	*106.7*	*14.7*	*23.9*	*41.1*
207	1-1/4	3/4	0.56	0.65	2.43	1.39	1.84	3.540/3.510	4.20	0.67	1.04	1.62
	1-7/16											
	35mm	*19.1*	*14.2*	*16.5*	*61.7*	*35.3*	*46.7*	*89.92/89.15*	*106.7*	*17.0*	*26.4*	*41.1*
208	1-1/2	1	0.63	0.75	2.75	1.94	2.05	4.015/3.985	4.50	0.75	1.19	1.62
	40mm	*25.4*	*16.0*	*19.1*	*69.9*	*49.3*	*52.1*	*101.98/101.22*	*114.3*	*19.1*	*30.2*	*41.1*
210	1-15/16	1	0.63	0.75	2.75	1.94	2.43	4.015/3.985	4.50	0.75	1.19	1.62
	2											
	50mm	*25.4*	*16.0*	*19.1*	*69.9*	*49.3*	*61.7*	*101.98/101.22*	*114.3*	*19.1*	*30.2*	*41.1*

SELECTION/DIMENSIONS

DODGE®



E-Z KLEEN Mounted Bearings

GT NORMAL DUTY BEARING INSERTS FOR E-Z KLEEN BEARINGS

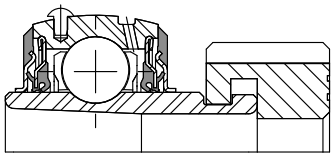

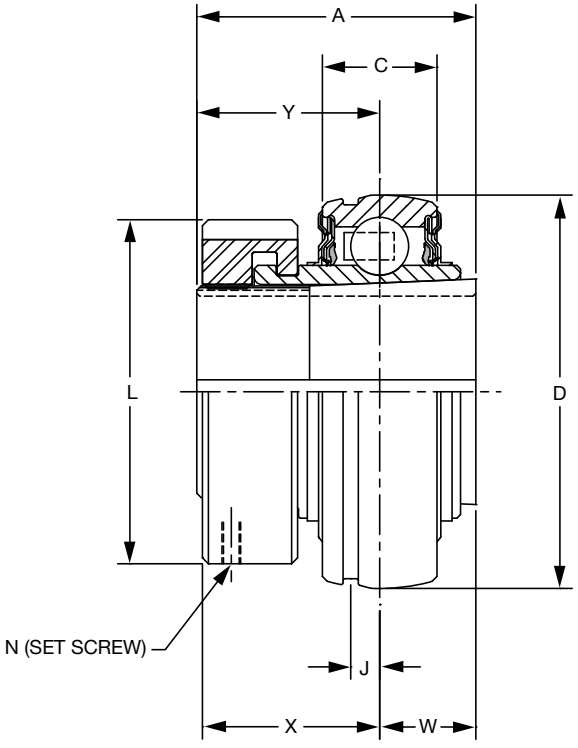

Series	Shaft Size	Complete Unit		Unit Without Adapter		Adapter & Nut Assembly	
		Part No.	Description	Part No.	Description	Part No.	Description
204	3/4	**129825**	INS-GT-012-CR	**129579**	INS-GT-04-CR	**129967**	AN-GT-04-012-CR
	20mm	***129826***	*INS-GT-20M-CR*			***129980***	*AN-GT-04-20M-CR*
205	1	**129827**	INS-GT-100-CR	**129580**	INS-GT-05-CR	**129968**	AN-GT-05-100-CR
	25mm	***129828***	*INS-GT-25M-CR*			***129981***	*AN-GT-05-25M-CR*
206	1-1/8	**@**	INS-GT-102-CR	**129581**	INS-GT-06-CR	**129969**	AN-GT-06-102-CR
	1-3/16	**129829**	INS-GT-103-CR			**129970**	AN-GT-06-103-CR
	1-1/4	**129830**	INS-GT-104S-CR			**129971**	AN-GT-06-104S-CR
	30mm	***129831***	*INS-GT-30M-CR*			***129982***	*AN-GT-06-30M-CR*
207	1-1/4	**129832**	INS-GT-104-CR	**129582**	INS-GT-07-CR	**129972**	AN-GT-07-104-CR
	1-3/8	**@**	INS-GT-106-CR			**129973**	AN-GT-07-106-CR
	1-7/16	**129833**	INS-GT-107-CR			**129974**	AN-GT-07-107-CR
	35mm	***129834***	*INS-GT-35M-CR*			***129983***	*AN-GT-07-35M-CR*
208	1-1/2	**129835**	INS-GT-108-CR	**129583**	INS-GT-08-CR	**129975**	AN-GT-08-108-CR
	40mm	***129836***	*INS-GT-40M-CR*			***129984***	*AN-GT-08-40M-CR*
209	1-11/16	**129837**	INS-GT-111-CR	**129584**	INS-GT-09-CR	**129976**	AN-GT-09-111-CR
	1- 3/4	**@**	INS-GT-112-CR			**129977**	AN-GT-09-112-CR
	45mm	***129838***	*INS-GT-45M-CR*			***129985***	*AN-GT-09-45M-CR*
210	1-15/16	**129839**	INS-GT-115-CR	**129585**	INS-GT-10-CR	**129978**	AN-GT-10-115-CR
	2	**@**	INS-GT-200-CR			**129979**	AN-GT-10-200-CR
	50mm	***129840***	*INS-GT-50M-CR*			***129986***	*AN-GT-10-50M-CR*

@ Assembled to order.

DODGE®



E-Z KLEEN Mounted Bearings

GT NORMAL DUTY BEARING INSERTS FOR E-Z KLEEN BEARINGS

Series	Shaft Size	Weight lbs kg	A	C	D	J	L	N Screw (UNF)	W#	X	Y#
204	3/4	0.6	1.48	0.58	1.8504	0.15	1.50	#10-32 x 1/4	0.46	1.03	1.02
	20mm	*0.3*	*37.6*	*14.7*	*47.000*	*3.8*	*38.1*		*11.7*	*26.2*	*25.9*
205	1	0.8	1.46	0.59	2.0472	0.16	1.80	#10-32 x 1/4	0.48	1.00	0.98
	25mm	*0.4*	*37.1*	*15.0*	*52.000*	*4.1*	*45.7*		*12.2*	*25.4*	*24.9*
206	1-1/8 1-3/16 1-1/4	1.2	1.61	0.69	2.4409	0.16	2.08	#10-32 x 1/4	0.52	1.13	1.09
	30mm	*0.6*	*40.9*	*17.5*	*62.000*	*4.1*	*52.8*		*13.2*	*28.7*	*27.7*
207	1-1/4 1-3/8 1-7/16	1.8	1.62	0.75	2.8346	0.20	2.38	#10-32 x 1/4	0.54	1.14	1.08
	35mm	*0.8*	*41.1*	*19.1*	*72.000*	*5.1*	*60.5*		*13.7*	*29.0*	*27.4*
208	1-1/2	2.2	1.84	0.87	3.1496	0.22	2.62	#10-32 x 1/4	0.61	1.23	1.23
	40mm	*1.0*	*46.7*	*22.1*	*80.000*	*5.6*	*66.5*		*15.5*	*31.2*	*31.2*
209	1-11/16 1-3/4	2.5	1.85	0.87	3.3465	0.25	2.86	#10-32 x 1/4	0.62	1.26	1.23
	45mm		*47.0*	*22.1*	*85.000*	*6.4*	*72.6*		*15.7*	*32.0*	*31.2*
210	1-15/16 2	3.0	1.86	0.87	3.5433	0.25	3.13	#10-32 x 1/4	0.63	1.26	1.23
	50mm	*1.4*	*47.2*	*22.1*	*90.000*	*6.4*	*79.5*		*16.0*	*32.0*	*31.2*

#W & Y dimensions will vary slightly depending on true shaft diameter.

FEATURES/BENEFITS PAGE B2-3	HOW TO ORDER/NOMENCLATURE PAGE B2-8	SELECTION/DIMENSIONS PAGE B2-24	ACCESSORIES PAGE B2-77

SELECTION/DIMENSIONS

DODGE®



E-Z KLEEN Mounted Bearings

SC NORMAL DUTY BEARING CORROSION RESISTANT INSERTS FOR E-Z KLEEN BEARINGS

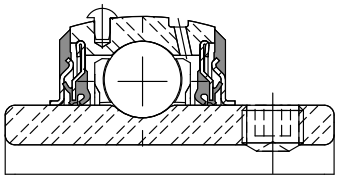

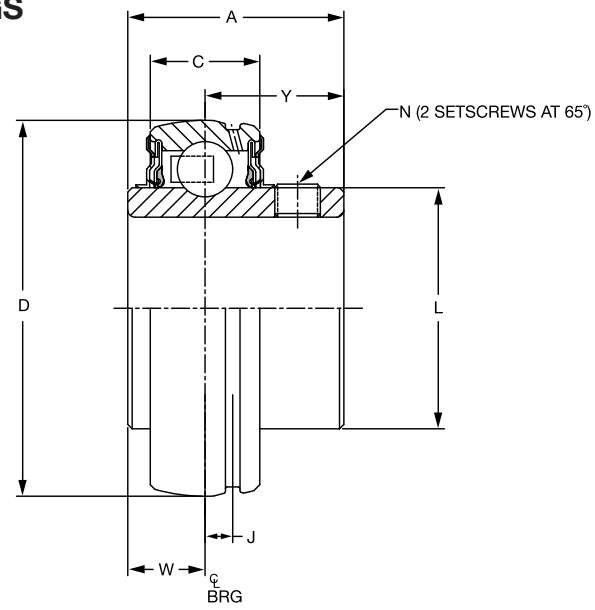

Series	Shaft Size	Insert with Flingers		Corrosion Resistant Insert		Weight lbs kg	A	C	D	J	L	N	W	Y
		Part No.	Description	Part No.	Description									
204	1/2	@	INS-SC-008L-FF	052981	INS-SC-008L-CR*	.38	1.23	0.58	1.8504	0.15	1.12	10-32	0.50	0.73
	5/8	124932	INS-SC-010L-FF	127073	INS-SC-010L-CR*	.35								
	3/4	123070	INS-SC-012-FF	045600	INS-SC-012-CR	.32								
	20mm	***050524***	*INS-SC-20M-FF*	***125873***	*INS-SC-20M-CR*	*.16*	*31.2*	*14.7*	*47.000*	*3.8*	*28.4*	*M6x1*	*12.7*	*18.5*
205	7/8	124931	INS-SC-014-FF	058665	INS-SC-014-CR*	.43	1.34	0.59	2.0472	0.16	1.32	1/4-28	0.56	0.78
	15/16	123069	INS-SC-015-FF	@	INS-SC-015-CR*	.40								
	1	123071	INS-SC-100-FF	045601	INS-SC-100-CR	.37								
	25mm	***052620***	*INS-SC-25M-FF*	***050580***	*INS-SC-25M-CR*	*.18*	*34.0*	*15.0*	*52.000*	*4.1*	*33.5*	*M6x1*	*14.2*	*19.8*
206	1-1/8	123234	INS-SC-102-FF	058989	INS-SC-102-CR*	.63	1.52	0.69	2.4409	0.16	1.57	5/16-24	0.58	0.94
	1-3/16	123072	INS-SC-103-FF	045602	INS-SC-103-CR	.60								
	1-1/4	123073	INS-SC-104S-FF	045603	INS-SC-104S-CR	.58								
	30mm	***052621***	*INS-SC-30M-FF*	***125874***	*INS-SC-30M-CR*	*.27*	*38.6*	*17.5*	*62.000*	*4.1*	*39.9*	*M8x1.25*	*14.7*	*23.9*
207	1-1/4	123074	INS-SC-104-FF	045412	INS-SC-104-CR	1.02	1.71	0.75	2.8346	0.20	1.84	5/16-24	0.67	1.04
	1-5/16	057102	INS-SC-105-FF	058345	INS-SC-105-CR*	.97								
	1-3/8	123460	INS-SC-106-FF	058965	INS-SC-106-CR*	.92								
	1-7/16	123075	INS-SC-107-FF	045604	INS-SC-107-CR	.86								
	35mm	***052622***	*INS-SC-35M-FF*	***050653***	*INS-SC-35M-CR*	*.44*	*43.4*	*19.1*	*72.000*	*5.1*	*46.7*	*M8x1.25*	*17.0*	*26.4*
208	1-1/2	123076	INS-SC-108-FF	045605	INS-SC-108-CR	1.27	1.94	0.87	3.1496	0.22	2.05	5/16-24	0.75	1.19
	1-5/8	123409	INS-SC-110-FF	@	INS-SC-110-CR*	1.13								
	40mm	***052623***	*INS-SC-40M-FF*	***050654***	*INS-SC-40M-CR*	*.51*	*49.3*	*22.1*	*80.000*	*5.6*	*52.1*	*M8x1.25*	*19.1*	*30.2*
209	1-5/8	@	INS-SC-110L-FF	@	INS-SC-110L-CR*	1.49	1.94	0.87	3.3465	0.25	2.22	5/16-24	0.75	1.19
	1-11/16	@	INS-SC-111-FF	125004	INS-SC-111-CR	1.43								
	1- 3/4	045677	INS-SC-112-FF	054145	INS-SC-112-CR*	1.36								
	45mm	@	*INS-SC-45M-FF*	***125005***	*INS-SC-45M-CR*	*.62*	*49.3*	*22.1*	*85.000*	*6.4*	*56.4*	*M8x1.25*	*19.1*	*30.2*
210	1-11/16	@	INS-SCM-111-FF	@	INS-SCM-111-CR*	1.82	1.94	0.87	3.5433	0.25	2.43	3/8-24	0.75	1.19
	1-15/16	123077	INS-SC-115-FF	045606	INS-SC-115-CR	1.48								
	2	123413	INS-SC-200-FF	045338	INS-SC-200-CR*	1.39								
	50mm	@	*INS-SC-50M-FF*	***050656***	*INS-SC-50M-CR*	*.67*	*49.3*	*22.1*	*90.000*	*6.4*	*61.7*	*M10x1.5*	*19.1*	*30.2*

@ Assembled to order * 20 piece minimum

DODGE®



E-Z KLEEN Mounted Bearings

DL NORMAL DUTY BEARING CORROSION RESISTANT INSERTS FOR E-Z KLEEN BEARINGS

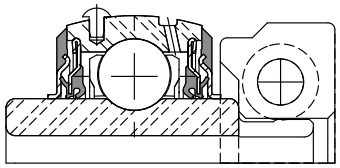

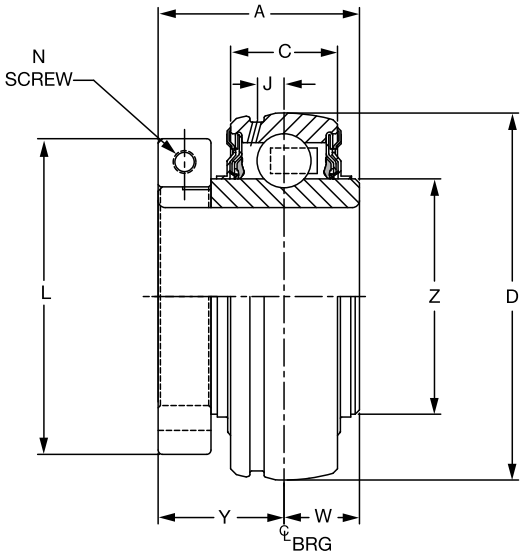

Series	Shaft Size	Insert with Flingers		Corrosion Resistant Insert		Weight lbs kg	A	C	D	J	L	N	W	Y	Z
		Part No.	Description	Part No.	Description										
204	3/4	**128646**	INS-DL-012	**126685**	INS-DL-012-CR	0.6	1.28	0.58	1.8504	0.15	1.71	#8-32	0.50	0.78	1.12
	20mm	***126629***	*INS-DL-20M*	***126693***	*INS-DL-20M-CR*	*0.3*	*32.5*	*14.7*	*47.000*	*3.8*	*43.4*	*M4x6*	*12.7*	*19.8*	*28.4*
205	7/8	**128684**	INS-DL-014	**@**	INS-DL-014-CR*	0.8	1.44	0.59	2.0472	0.16	1.99	#10-32	0.56	0.88	1.32
	15/16	**128647**	INS-DL-015	**@**	INS-DL-015-CR*	0.8									
	1	**128648**	INS-DL-100	**126686**	INS-DL-100-CR	0.8									
	25mm	***126630***	*INS-DL-25M*	***126694***	*INS-DL-25M-CR*	*0.4*	*36.6*	*15.0*	*52.000*	*4.1*	*50.5*	*M5x20*	*14.2*	*22.4*	*33.5*
206	1-1/8	**128649**	INS-DL-102	**059869**	INS-DL-102-CR*	1.2	1.56	0.69	2.4409	0.16	2.22	#10-32	0.58	0.98	1.57
	1-3/16	**128650**	INS-DL-103	**126687**	INS-DL-103-CR	1.2									
	1-1/4	**128651**	INS-DL-104S	**126688**	INS-DL-104S-CR	1.1									
	30mm	***126631***	*INS-DL-30M*	***126695***	*INS-DL-30M-CR*	*0.6*	*39.6*	*17.5*	*62.000*	*4.1*	*56.4*	*M5x20*	*14.7*	*24.9*	*39.9*
207	1-1/4	**128652**	INS-DL-104	**126689**	INS-DL-104-CR	1.8	1.75	0.75	2.8346	0.20	2.69	1/4-28	0.67	1.08	1.84
	1-3/8	**128653**	INS-DL-106	**@**	INS-DL-106-CR*	1.8									
	1-7/16	**128654**	INS-DL-107	**052093**	INS-DL-107-CR	1.7									
	35mm	***126632***	*INS-DL-35M*	***126696***	*INS-DL-35M-CR*	*0.8*	*44.5*	*19.1*	*72.000*	*5.1*	*68.3*	*M6x20*	*17.0*	*27.4*	*46.7*
208	1-1/2	**128655**	INS-DL-108	**126690**	INS-DL-108-CR	2.2	2.01	0.87	3.1496	0.22	2.74	1/4-28	0.75	1.26	2.05
	40mm	***126633***	*INS-DL-40M*	***126697***	*INS-DL-40M-CR*	*1.0*	*51.1*	*22.1*	*80.000*	*5.6*	*69.6*	*M6x20*	*19.1*	*32.0*	*52.1*
209	1-5/8	**128656**	INS-DL-110L	**@**	INS-DL-110L-CR*	2.5	2.01	0.87	3.3465	0.25	2.99	1/4-28	0.75	1.26	2.22
	1-11/16	**128657**	INS-DL-111	**126691**	INS-DL-111-CR	2.5									
	1- 3/4	**128658**	INS-DL-112	**@**	INS-DL-112-CR*	2.5									
	45mm	***126634***	*INS-DL-45M*	***126698***	*INS-DL-45M-CR*	*1.2*	*51.1*	*22.1*	*85.000*	*6.4*	*75.9*	*M6x20*	*19.1*	*32.0*	*56.4*
210	1-11/16	**128672**	INS-DLM-111	**@**	INS-DLM-111-CR	3.0	2.01	0.87	3.5433	0.25	3.24	1/4-28	0.75	1.26	2.43
	1-15/16	**128659**	INS-DL-115	**126692**	INS-DL-115-CR	3.0									
	2	**128660**	INS-DL-200	**053986**	INS-DL-200-CR*	3.0									
	50mm	***126635***	*INS-DL-50M*	***126699***	*INS-DL-50M-CR*	*1.4*	*51.1*	*22.1*	*90.000*	*6.4*	*82.3*	*M6x20*	*19.1*	*32.0*	*61.7*

@ Assembled to order

* 20 piece minimum

FEATURES/BENEFITS PAGE B2-3	HOW TO ORDER/NOMENCLATURE PAGE B2-8	SELECTION/DIMENSIONS PAGE B2-24	ACCESSORIES PAGE B2-77

SELECTION/DIMENSIONS

DODGE®

E-Z KLEEN Mounted Bearings
GTEZ NORMAL DUTY POLYMER HOUSED PILLOW BLOCKS

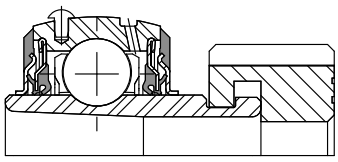

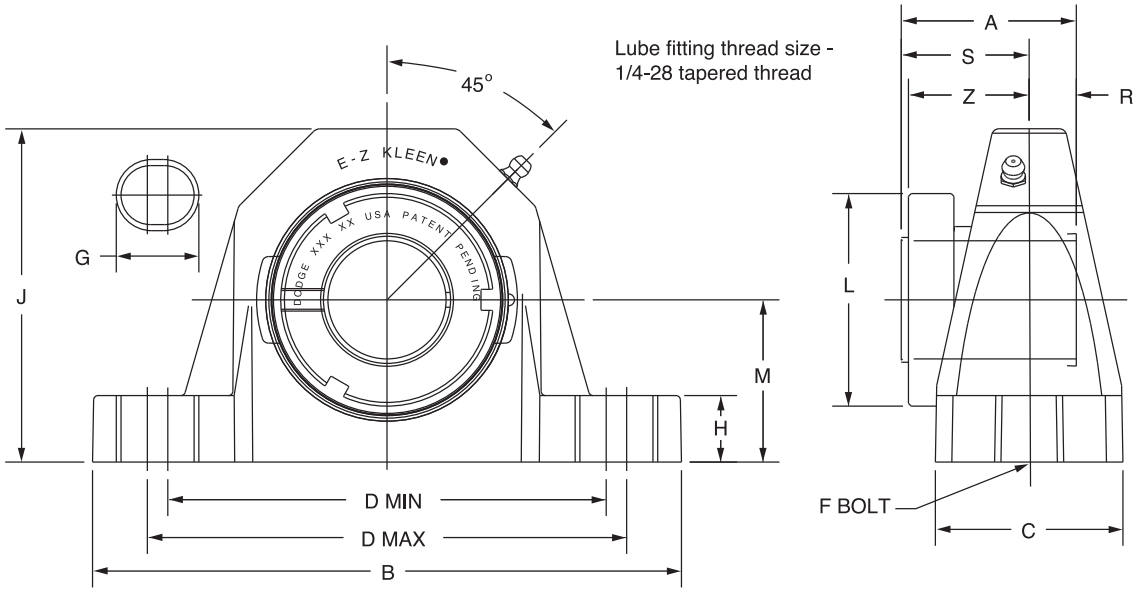

Series	Shaft Size	Complete Unit		Unit without Adapter		Adapter & Nut Assembly	
		Part No.	Description	Part No.	Description	Part No.	Description
204	3/4	**129244**	P2B-GTEZ-012-PCR	**129530**	P2B-GTEZ-04-PCR	**129967**	AN-GT-04-012-CR
	20mm	***129245***	*P2B-GTEZ-20M-PCR*			***129980***	*AN-GT-04-20M-CR*
205	1	**129246**	P2B-GTEZ-100-PCR	**129531**	P2B-GTEZ-05-PCR	**129968**	AN-GT-05-100-CR
	25mm	***129247***	*P2B-GTEZ-25M-PCR*			***129981***	*AN-GT-05-25M-CR*
206 (GTU)	1-1/8	**@**	P2B-GTUEZ-102-PCR	**129536**	P2B-GTUEZ-06-PCR	**129969**	AN-GT-06-102-CR
	1-3/16	**129248**	P2B-GTUEZ-103-PCR			**129602**	AN-GT-06-103-CR
	1-1/4	**129249**	P2B-GTUEZ-104S-PCR			**129603**	AN-GT-06-104S-CR
	30mm	***129250***	*P2B-GTUEZ-30M-PCR*			***129611***	*AN-GT-06-30M-CR*
207	1-1/4	**129251**	P2B-GTEZ-104-PCR	**129532**	P2B-GTEZ-07-PCR	**129972**	AN-GT-07-104-CR
	1-3/8	**129392**	P2B-GTEZ-106-PCR			**129973**	AN-GT-07-106-CR
	1-7/16	**129252**	P2B-GTEZ-107-PCR			**129974**	AN-GT-07-107-CR
	35mm	***129253***	*P2B-GTEZ-35M-PCR*			***129983***	*AN-GT-07-35M-CR*
208 (GTB)	1-1/2	**129254**	P2B-GTBEZ-108-PCR	**129535**	P2B-GTBEZ-08-PCR	**129606**	AN-GT-08-108-CR
	40mm	***129255***	*P2B-GTBEZ-40M-PCR*			***129613***	*AN-GT-08-40M-CR*
209	1-11/16	**129256**	P2B-GTEZ-111-PCR	**129533**	P2B-GTEZ-09-PCR	**129976**	AN-GT-09-111-CR
	1-3/4	**129396**	P2B-GTEZ-112-PCR			**129977**	AN-GT-09-112-CR
	45mm	***129257***	*P2B-GTEZ-45M-PCR*			***129985***	*AN-GT-09-45M-CR*
210	1-15/16	**129258**	P2B-GTEZ-115-PCR	**129534**	P2B-GTEZ-10-PCR	**129978**	AN-GT-10-115-CR
	2	**129393**	P2B-GTEZ-200-PCR			**129979**	AN-GT-10-200-CR
	50mm	***129259***	*P2B-GTEZ-50M-PCR*			***129986***	*AN-GT-10-50M-CR*

DODGE®



E-Z KLEEN Mounted Bearings
GTEZ NORMAL DUTY POLYMER HOUSED PILLOW BLOCKS

Series	Shaft Size	Weight lbs kg	A	B	C	D		F Bolt Dia.	G	H	J	L	M	R#	S#	Z
						min.	max.									
204	3/4	0.9	1.48	5.02	1.48	3.66	3.92	3/8	0.59	0.61	2.63	1.50	1.31	0.46	1.02	1.03
	20mm	*0.4*	*37.6*	*127.5*	*37.6*	*93.0*	*99.6*	*M10*	*15.0*	*15.5*	*66.8*	*38.1*	*33.4*	*11.7*	*25.9*	*26.2*
205	1	1.1	1.46	5.48	1.48	3.96	4.20	3/8	0.59	0.61	2.86	1.80	1.44	0.48	0.98	1.00
	25mm	*0.5*	*37.1*	*139.2*	*37.6*	*100.6*	*106.7*	*M10*	*15.0*	*15.5*	*72.6*	*45.7*	*36.5*	*12.2*	*24.9*	*25.4*
206 (GTU)	1-1/8	1.8	1.61	6.30	1.77	4.60	4.88	1/2	0.73	0.70	3.34	2.08	1.69	0.52	1.09	1.13
	1-3/16	1.7														
	1-1/4	1.6														
	30mm	*0.8*	*40.9*	*160.0*	*45.0*	*116.8*	*124.0*	*M12*	*18.5*	*17.8*	*84.8*	*52.8*	*42.9*	*13.2*	*27.7*	*28.7*
207	1-1/4	2.5	1.62	6.54	1.86	4.80	5.12	1/2	0.73	0.72	3.89	2.38	1.88	0.54	1.08	1.14
	1-3/8	2.4														
	1-7/16	2.4														
	35mm	*1.1*	*41.1*	*166.1*	*47.2*	*121.9*	*130.0*	*M12*	*18.5*	*18.3*	*98.8*	*60.5*	*47.6*	*13.7*	*27.4*	*29.0*
208 (GTB)	1-1/2	3.0	1.84	7.19	2.10	5.10	5.64	1/2	0.88	0.76	4.16	2.62	1.94	0.61	1.23	1.23
	40mm	*1.4*	*46.7*	*182.6*	*53.3*	*129.5*	*143.3*	*M12*	*22.4*	*19.3*	*105.7*	*66.5*	*49.2*	*15.5*	*31.2*	*31.2*
209	1-11/16	3.4	1.85	7.20	2.10	5.42	5.96	1/2	0.88	0.84	4.31	2.86	2.13	0.62	1.23	1.26
	1-3/4	3.3														
	45mm	*1.6*	*47.0*	*182.9*	*53.3*	*137.7*	*151.4*	*M12*	*22.4*	*21.3*	*109.5*	*72.6*	*54.0*	*15.7*	*31.2*	*32.0*
210	1-15/16	4.2	1.86	8.06	2.36	6.00	6.56	5/8	1.00	0.91	4.56	3.13	2.25	0.63	1.23	1.26
	2	4.1														
	50mm	*1.7*	*47.2*	*204.7*	*59.9*	*152.4*	*166.6*	*M16*	*25.4*	*23.1*	*115.8*	*79.5*	*57.2*	*16.0*	*31.2*	*32.0*

#R & S dimensions will vary slightly depending on true shaft Diameter

SELECTION/DIMENSIONS

DODGE®

E-Z KLEEN Mounted Bearings
SCEZ NORMAL DUTY POLYMER HOUSED PILLOW BLOCKS

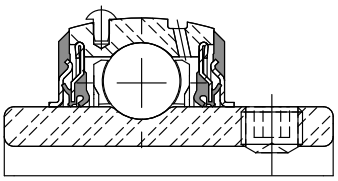

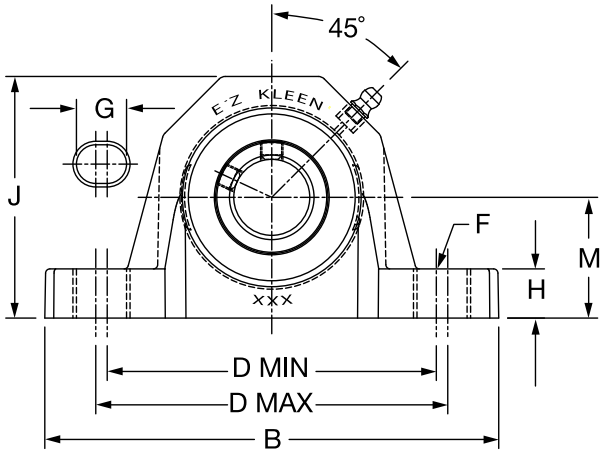

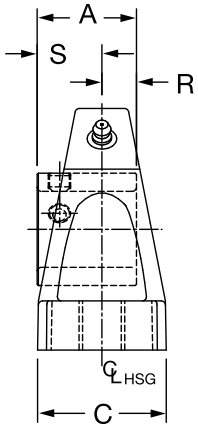

Series	Shaft Size	With Corrosion Resistant Insert		Standard Insert With Flingers	
		Part No.	Description	Part No.	Description
204	1/2	@	P2B-SCEZ-008L-PCR*	@	P2B-SCEZ-008L-P
	5/8	**068322**	P2B-SCEZ-010L-PCR*	**064572**	P2B-SCEZ-010L-P
	3/4	**127500**	P2B-SCEZ-012-PCR	@	P2B-SCEZ-012-P
	20mm	***127545***	*P2B-SCEZ-20M-PCR*	@	*P2B-SCEZ-20M-P*
205	7/8	**064839**	P2B-SCEZ-014-PCR*	**062837**	P2B-SCEZ-014-P
	15/16	**058975**	P2B-SCEZ-015-PCR*	@	P2B-SCEZ-015-P
	1	**127501**	P2B-SCEZ-100-PCR	**058597**	P2B-SCEZ-100-P
	25mm	***127546***	*P2B-SCEZ-25M-PCR*	@	*P2B-SCEZ-25M-P*
206	1-1/8	**075096**	P2B-SCUEZ-102-PCR*	**067919**	P2B-SCUEZ-102-P
	1-3/16	**127502**	P2B-SCUEZ-103-PCR	@	P2B-SCUEZ-103-P
	1-1/4	**127503**	P2B-SCUEZ-104S-PCR	**058596**	P2B-SCUEZ-104S-P
	30mm	***127547***	*P2B-SCUEZ-30M-PCR*	@	*P2B-SCUEZ-30M-P*
207	1-1/4	**127504**	P2B-SCEZ-104-PCR	**065655**	P2B-SCEZ-104-P
	1-5/16	**059722**	P2B-SCEZ-105-PCR*	@	P2B-SCEZ-105-P
	1-3/8	**058944**	P2B-SCEZ-106-PCR*	@	P2B-SCEZ-106-P
	1-7/16	**127505**	P2B-SCEZ-107-PCR	**064064**	P2B-SCEZ-107-P
	35mm	***127548***	*P2B-SCEZ-35M-PCR*	@	*P2B-SCEZ-35M-P*
208	1-1/2	**127506**	P2B-SCBEZ-108-PCR	@	P2B-SCBEZ-108-P
	1-5/8	**068495**	P2B-SCBEZ-110-PCR*	@	P2B-SCBEZ-110-P
	40mm	***127549***	*P2B-SCBEZ-40M-PCR*	@	*P2B-SCBEZ-40M-P*
209	1-5/8	@	P2B-SCBEZ-110L-PCR*	@	P2B-SCBEZ-110L-P
	1-11/16	**127507**	P2B-SCEZ-111-PCR	**067996**	P2B-SCEZ-111-P
	1-3/4	**058931**	P2B-SCEZ-112-PCR	@	P2B-SCEZ-112-P
	45mm	***127550***	*P2B-SCEZ-45M-PCR*	@	*P2B-SCEZ-45M-P*
210	1-15/16	**127508**	P2B-SCEZ-115-PCR	**056497**	P2B-SCEZ-115-P
	2	**057898**	P2B-SCEZ-200-PCR	@	P2B-SCEZ-200-P
	50mm	***127551***	*P2B-SCEZ-50M-PCR*	@	*P2B-SCEZ-50M-P*

@ Assembled to order

* 20 piece minimum

DODGE®



E-Z KLEEN Mounted Bearings
SCEZ NORMAL DUTY POLYMER HOUSED PILLOW BLOCKS

Size	Shaft Series	Weight lbs kg	A	B	C	D		F Bolt Dia.	G	H	J	L	M	R	S
						min.	max.								
204	1/2	0.68	1.23	5.02	1.48	3.66	3.92	3/8	0.59	0.61	2.63	1.12	1.31	0.50	0.73
	5/8	0.66													
	3/4	0.64													
	20mm	*0.30*	*31.2*	*127.5*	*37.6*	*93.0*	*99.6*	*M10*	*15.0*	*15.5*	*66.8*	*28.4*	*33.4*	*12.7*	*18.5*
205	7/8	0.73	1.34	5.48	1.48	3.96	4.20	3/8	0.59	0.61	2.86	1.32	1.44	0.56	0.78
	15/16	0.71													
	1	0.69													
	25mm	*0.32*	*34.0*	*139.2*	*37.6*	*100.6*	*106.7*	*M10*	*15.0*	*15.5*	*72.6*	*33.5*	*36.5*	*14.2*	*19.8*
206	1-1/8	1.15	1.52	6.30	1.77	4.60	4.88	1/2	0.73	0.70	3.34	1.57	1.69	0.58	0.94
	1-3/16	1.13													
	1-1/4	1.11													
	30mm	*0.51*	*38.6*	*160.0*	*45.0*	*116.8*	*124.0*	*M12*	*18.5*	*17.8*	*84.8*	*39.9*	*42.9*	*14.7*	*23.9*
207	1-1/4	1.68	1.71	6.54	1.86	4.80	5.12	1/2	0.73	0.72	3.89	1.84	1.88	0.67	1.04
	1-5/16	1.63													
	1-3/8	1.58													
	1-7/16	1.52													
	35mm	*0.74*	*43.4*	*166.1*	*47.2*	*121.9*	*130.0*	*M12*	*18.5*	*18.3*	*98.8*	*46.7*	*47.6*	*17.0*	*26.4*
208	1-1/2	2.08	1.94	7.19	2.10	5.10	5.64	1/2	0.88	0.76	4.16	2.05	1.94	0.75	1.19
	1-5/8	2.00													
	40mm	*0.88*	*49.3*	*182.6*	*53.3*	*129.5*	*143.3*	*M12*	*22.4*	*19.3*	*105.7*	*52.1*	*49.2*	*19.1*	*30.2*
209	1-5/8	2.41	1.94	7.20	2.10	5.42	5.96	1/2	0.88	0.84	4.31	2.22	2.13	0.75	1.19
	1-11/16	2.34													
	1-3/4	2.27													
	45mm	*1.03*	*49.3*	*182.9*	*53.3*	*137.7*	*151.4*	*M12*	*22.4*	*21.3*	*109.5*	*56.4*	*54.0*	*19.1*	*30.2*
210	1-15/16	2.65	1.94	8.06	2.36	6.00	6.56	5/8	1.00	0.91	4.56	2.43	2.25	0.75	1.19
	2	2.58													
	50mm	*1.30*	*49.3*	*204.7*	*59.9*	*152.4*	*166.6*	*M16*	*25.4*	*23.1*	*115.8*	*61.7*	*57.2*	*19.1*	30.2

SELECTION/DIMENSIONS

E-Z KLEEN Mounted Bearings
DLEZ NORMAL DUTY POLYMER HOUSED PILLOW BLOCKS

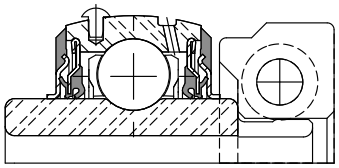

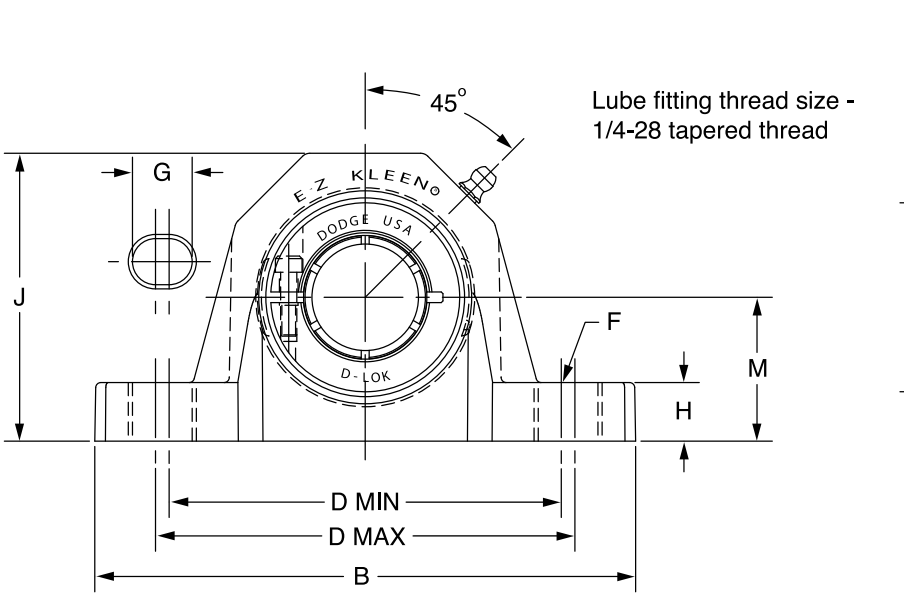

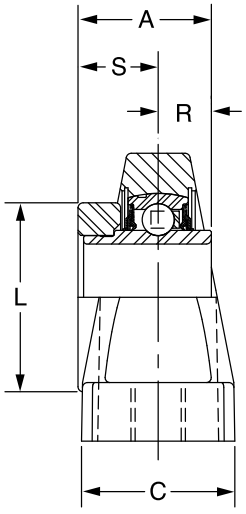

Series	Shaft Size	With Corrosion Resistant Insert		Standard Insert With Flingers	
		Part No.	Description	Part No.	Description
204	3/4	**127578**	P2B-DLEZ-012-PCR	@	P2B-DLEZ-012-P
	20mm	***127623***	*P2B-DLEZ-20M-PCR*	@	*P2B-DLEZ-20M-P*
205	7/8	@	P2B-DLEZ-014-PCR*	@	P2B-DLEZ-014-P
	15/16	@	P2B-DLEZ-015-PCR*	@	P2B-DLEZ-015-P
	1	**127579**	P2B-DLEZ-100-PCR	@	P2B-DLEZ-100-P
	25mm	***127624***	*P2B-DLEZ-25M-PCR*	@	*P2B-DLEZ-25M-P*
206 (DLU)	1-1/8	@	P2B-DLUEZ-102-PCR*	@	P2B-DLUEZ-102-P
	1-3/16	**127580**	P2B-DLUEZ-103-PCR	@	P2B-DLUEZ-103-P
	1-1/4	**127581**	P2B-DLUEZ-104S-PCR	@	P2B-DLUEZ-104S-P
	30mm	***127625***	*P2B-DLUEZ-30M-PCR*	@	*P2B-DLUEZ-30M-P*
207	1-1/4	**127582**	P2B-DLEZ-104-PCR	@	P2B-DLEZ-104-P
	1-3/8	@	P2B-DLEZ-106-PCR*	@	P2B-DLEZ-106-P
	1-7/16	**127583**	P2B-DLEZ-107-PCR	@	P2B-DLEZ-107-P
	35mm	***127626***	*P2B-DLEZ-35M-PCR*	@	*P2B-DLEZ-35M-P*
208 *(DLB)*	1-1/2	**127584**	P2B-DLBEZ-108-PCR	@	P2B-DLBEZ-108-P
	40mm	***127627***	*P2B-DLBEZ-40M-PCR*	@	*P2B-DLBEZ-40M-P*
209	1-5/8	**057442**	P2B-DLEZ-110L-PCR*	@	P2B-DLEZ-110L-P
	1-11/16	**127585**	P2B-DLEZ-111-PCR	@	P2B-DLEZ-111-P
	1-3/4	**062875**	P2B-DLEZ-112-PCR*	@	P2B-DLEZ-112-P
	45mm	***127628***	*P2B-DLEZ-45M-PCR*	@	*P2B-DLEZ-45M-P*
210	1-15/16	**127586**	P2B-DLEZ-115-PCR	@	P2B-DLEZ-115-P
	2	**058516**	P2B-DLEZ-200-PCR	@	P2B-DLEZ-200-P
	50mm	***127629***	*P2B-DLEZ-50M-PCR*	@	*P2B-DLEZ-50M-P*

@ Assembled to order
* 20 piece minimum

DODGE®



E-Z KLEEN Mounted Bearings
DLEZ NORMAL DUTY POLYMER HOUSED PILLOW BLOCKS

Size	Shaft Series	Weight lbs kg	A	B	C	D		F Bolt Dia.	G	H	J	L	M	R	S
						min.	max.								
204	3/4	0.92	1.28	5.02	1.48	3.66	3.92	3/8	0.59	0.61	2.63	1.71	1.31	0.50	0.78
	20mm	*0.42*	*32.5*	*127.5*	*37.6*	*93.0*	*99.6*	*M10*	*15.0*	*15.5*	*66.8*	*43.4*	*33.4*	*12.7*	*19.8*
205	7/8	1.32	1.44	5.48	1.48	3.96	4.20	3/8	0.59	0.61	2.86	1.99	1.44	0.56	0.88
	15/16	1.22													
	1	1.12													
	25mm	*0.51*	*36.6*	*139.2*	*37.6*	*100.6*	*106.7*	*M10*	*15.0*	*15.5*	*72.6*	*50.5*	*36.5*	*14.2*	*22.4*
206 (DLU)	1-1/8	1.83	1.56	6.30	1.77	4.60	4.88	1/2	0.73	0.70	3.34	2.22	1.69	0.58	0.98
	1-3/16	1.73													
	1-1/4	1.63													
	30mm	*0.79*	*39.6*	*160.0*	*45.0*	*116.8*	*124.0*	*M12*	*18.5*	*17.8*	*84.8*	*56.4*	*42.9*	*14.7*	*24.9*
207	1-1/4	2.46	1.75	6.54	1.86	4.80	5.12	1/2	0.73	0.72	3.89	2.69	1.88	0.67	1.08
	1-3/8	2.41													
	1-7/16	2.36													
	35mm	*1.13*	*44.5*	*166.1*	*47.2*	*121.9*	*130.0*	*M12*	*18.5*	*18.3*	*98.8*	*68.3*	*47.6*	*17.0*	*27.4*
208 (DLB)	1-1/2	3.01	2.01	7.19	2.10	5.10	5.64	1/2	0.88	0.76	4.16	2.74	1.94	0.75	1.26
	40mm	*1.39*	*51.1*	*182.6*	*53.3*	*129.5*	*143.3*	*M12*	*22.4*	*19.3*	*105.7*	*69.6*	*49.2*	*19.1*	*32.0*
209	1-5/8	3.51	2.01	7.20	2.10	5.42	5.96	1/2	0.88	0.84	4.31	2.99	2.13	0.75	1.26
	1-11/16	3.41													
	1-3/4	3.31													
	45mm	*1.56*	*51.1*	*182.9*	*53.3*	*137.7*	*151.4*	*M12*	*22.4*	*21.3*	*109.5*	*75.9*	*54.0*	*19.1*	*32.0*
210	1-15/16	4.17	2.01	8.06	2.36	6.00	6.56	5/8	1.00	0.91	4.56	3.24	2.25	0.75	1.26
	2	4.07													
	50mm	*1.68*	*51.1*	*204.7*	*59.9*	*152.4*	*166.6*	*M16*	*25.4*	*23.1*	*115.8*	*82.3*	*57.2*	*19.1*	*32.0*

SELECTION/DIMENSIONS

DODGE®



E-Z KLEEN Mounted Bearings
GTEZ NORMAL DUTY POLYMER HOUSED TAPPED BASE PILLOW BLOCKS

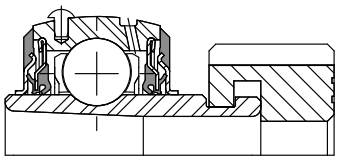

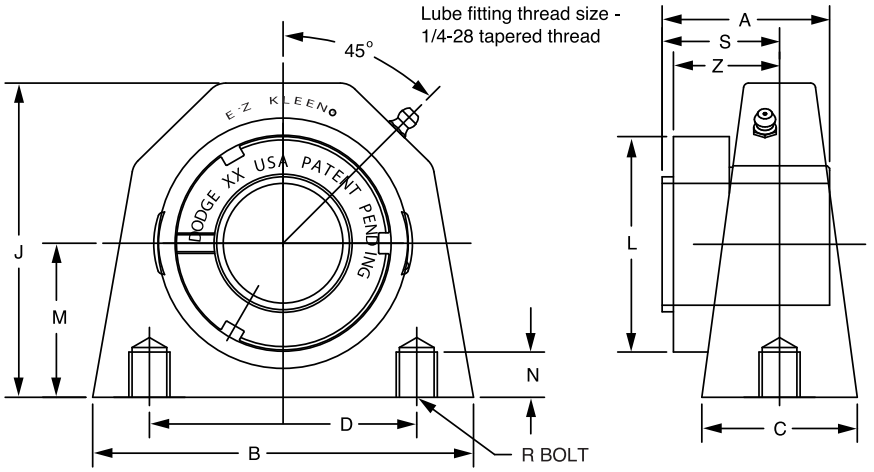

Series	Shaft Size	Complete Unit		Unit Without Adapter		Adapter & Nut Assembly	
		Part No.	Description	Part No.	Description	Part No.	Description
204	3/4	**129291**	TB-GTEZ-012-PCR	**129537**	TB-GTEZ-04-PCR	**129967**	AN-GT-04-012-CR
	20mm	***129292***	*TB-GTEZ-20M-PCR*	***129988***	*TB-GTEZ-04M-PCR*	***129980***	*AN-GT-04-20M-CR*
205	1	**129293**	TB-GTEZ-100-PCR	**129538**	TB-GTEZ-05-PCR	**129968**	AN-GT-05-100-CR
	25mm	***129294***	*TB-GTEZ-25M-PCR*	***129989***	*TB-GTEZ-05M-PCR*	***129981***	*AN-GT-05-25M-CR*
206	1 -1/8	**@**	TB-GTEZ-102-PCR			**129969**	AN-GT-06-102-CR
	1 -3/16	**129295**	TB-GTEZ-103-PCR	**129539**	TB-GTEZ-06-PCR	**129970**	AN-GT-06-103-CR
	1-1/4	**129296**	TB-GTEZ-104S-PCR			**129971**	AN-GT-06-104S-CR
	30mm	***129297***	*TB-GTEZ-30M-PCR*	***129990***	*TB-GTEZ-06M-PCR*	***129982***	*AN-GT-06-30M-CR*
207	1-1/4	**129298**	TB-GTEZ-104-PCR			**129972**	AN-GT-07-104-CR
	1 -3/8	**@**	TB-GTEZ-106-PCR	**129540**	TB-GTEZ-07-PCR	**129973**	AN-GT-07-106-CR
	1 -7/16	**129299**	TB-GTEZ-107-PCR			**129974**	AN-GT-07-107-CR
	35mm	***129300***	*TB-GTEZ-35M-PCR*	***129991***	*TB-GTEZ-07M-PCR*	***129983***	*AN-GT-07-35M-CR*

@ Assembled to order

Series	Shaft Size	Weight Lbs kg	A	B	C	D	J	L	M	N Thread Depth	R Bolt Hole Threads	S#	Z
204	3/4	0.88	1.48	3.25	1.48	2.00	2.65	1.50	1.31	0.40	3/8-16	1.02	1.03
	20mm	*0.41*	*37.6*	*82.6*	*37.6*	*50.8*	*67.3*	*38.1*	*33.4*	*10.2*	*M10x1.5*	*25.9*	*26.2*
205	1	1.01	1.46	3.25	1.49	2.00	2.89	1.80	1.44	0.40	3/8-16	0.98	1.00
	25mm	*0.47*	*37.1*	*82.6*	*37.8*	*50.8*	*73.4*	*45.7*	*36.5*	*10.2*	*M10x1.5*	*24.9*	*25.4*
206	1-1/8	1.79	1.61	4.38	1.57	3.00	3.38	2.08	1.69	0.45	7/16-14	1.09	1.13
	1-3/16	1.69											
	1-1/4	1.59											
	30mm	*0.77*	*40.9*	*111.3*	*39.9*	*76.2*	*85.9*	*52.8*	*42.9*	*11.4*	*M10x1.5*	*27.7*	*28.7*
207	1-1/4	2.62	1.62	4.63	1.89	3.25	3.82	2.38	1.88	0.55	1/2-13	1.08	1.14
	1-3/8	2.42											
	1-7/16	2.32											
	35mm	*1.11*	*41.1*	*117.6*	*48.0*	*82.6*	*97.0*	*60.5*	*47.6*	*14.0*	*M12x1.75*	*27.4*	*29.0*

#S dimension will vary slightly depending on true shaft diameter

DODGE®



E-Z KLEEN Mounted Bearings

SCEZ NORMAL DUTY POLYMER HOUSED TAPPED BASE PILLOW BLOCKS

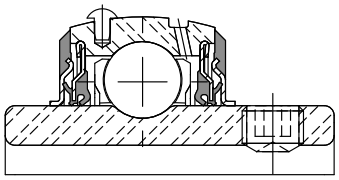

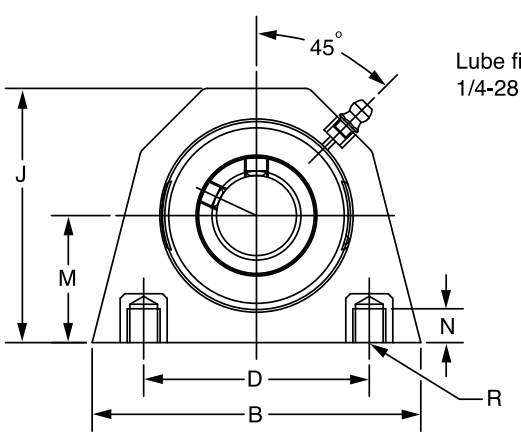

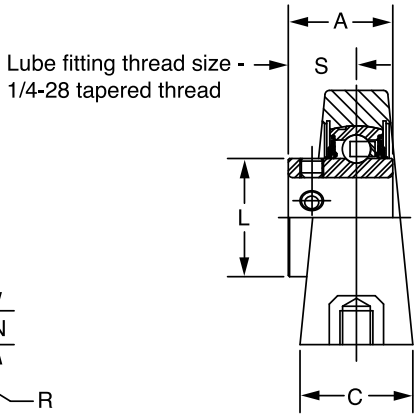

Series	Shaft Size	With Corrosion Resistant Insert		Standard Insert With Flingers		Weight lbs kg	A	B	C	D	J	L	M	N Thread Depth	R Bolt Hole Threads	S
		Part No.	Description	Part No.	Description											
204	1/2	@	TB-SCEZ-008L-PCR*	@	TB-SCEZ-008L-P	0.74	1.23	3.25	1.48	2.00	2.65	1.12	1.31	0.40	3/8-16	0.73
	5/8	**064720**	TB-SCEZ-010L-PCR*	@	TB-SCEZ-010L-P	0.66										
	3/4	**127509**	TB-SCEZ-012-PCR	@	TB-SCEZ-012-P	0.60										
	20mm	***127552***	*TB-SCEZ-20M-PCR*	@	*TB-SCEZ-20M-P*	*0.29*	*31.2*	*82.6*	*37.6*	*50.8*	*67.3*	*28.4*	*33.4*	*10.2*	*M10x1.5*	*18.5*
205	7/8	@	TB-SCEZ-014-PCR*	@	TB-SCEZ-014-P	0.72	1.34	3.25	1.49	2.00	2.89	1.32	1.44	0.40	3/8-16	0.78
	15/16	@	TB-SCEZ-015-PCR*	@	TB-SCEZ-015-P	0.64										
	1	**127510**	TB-SCEZ-100-PCR	@	TB-SCEZ-100-P	0.58										
	25mm	***127553***	*TB-SCEZ-25M-PCR*	@	*TB-SCEZ-25M-P*	*0.28*	*34.0*	*82.6*	*37.8*	*50.8*	*73.4*	*33.5*	*36.5*	*10.2*	*M10x1.5*	*19.8*
206	1-1/8	@	TB-SCEZ-102-PCR*	@	TB-SCEZ-102-P	1.16	1.52	4.38	1.57	3.00	3.38	1.57	1.69	0.45	7/16-14	0.94
	1-3/16	**127511**	TB-SCEZ-103-PCR	@	TB-SCEZ-103-P	1.09										
	1-1/4	**127512**	TB-SCEZ-104S-PCR	**058632**	TB-SCEZ-104S-P	1.07										
	30mm	***127554***	*TB-SCEZ-30M-PCR*	@	*TB-SCEZ-30M-P*	*0.49*	*38.6*	*111.3*	*39.9*	*76.2*	*85.9*	*39.9*	*42.9*	*11.4*	*M10x1.5*	*23.9*
207	1-1/4	**127513**	TB-SCEZ-104-PCR	@	TB-SCEZ-104-P	1.64	1.71	4.63	1.89	3.25	3.82	1.84	1.88	0.55	1/2-13	1.04
	1-5/16	@	TB-SCEZ-105-PCR*	@	TB-SCEZ-105-P	1.58										
	1-3/8	**056577**	TB-SCEZ-106-PCR*	@	TB-SCEZ-106-P	1.53										
	1-7/16	**127514**	TB-SCEZ-107-PCR	@	TB-SCEZ-107-P	1.48										
	35mm	***127555***	*TB-SCEZ-35M-PCR*	@	*TB-SCEZ-35M-P*	*0.72*	*43.4*	*117.6*	*48.0*	*82.6*	*97.0*	*46.7*	*47.6*	*14.0*	*M12x1.75*	*26.4*

@ Assembled to order
*20 piece minimum

SELECTION/DIMENSIONS

DODGE®



E-Z KLEEN Mounted Bearings
DLEZ NORMAL DUTY POLYMER HOUSED TAPPED BASE PILLOW BLOCKS

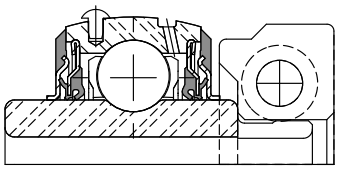

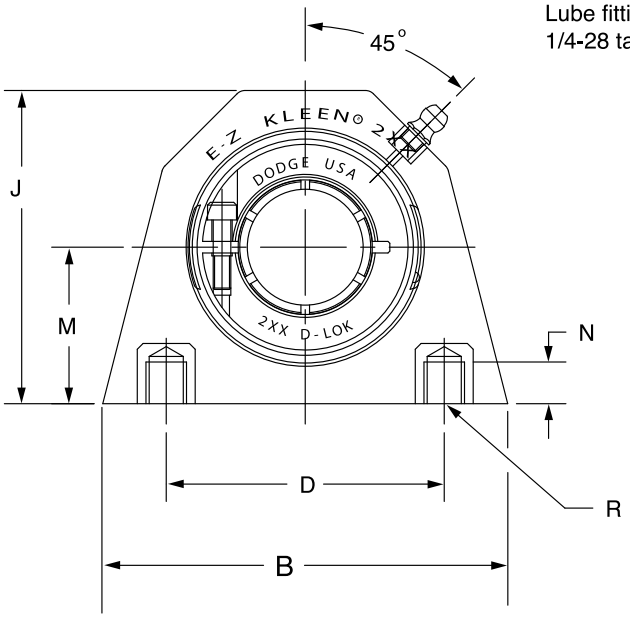

Lube fitting thread size - 1/4-28 tapered thread

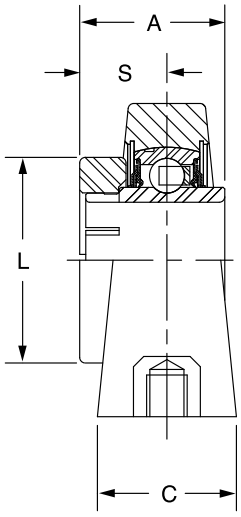

Series	Shaft Size	With Corrosion Resistant Insert		Standard Insert With Flingers	
		Part No.	Description	Part No.	Description
204	3/4	**127587**	TB-DLEZ-012-PCR	@	TB-DLEZ-012-P
	20mm	***127630***	*TB-DLEZ-20M-PCR*	@	*TB-DLEZ-20M-P*
205	7/8	@	TB-DLEZ-014-PCR*	@	TB-DLEZ-014-P
	15/16	@	TB-DLEZ-015-PCR*	@	TB-DLEZ-015-P
	1	**127588**	TB-DLEZ-100-PCR	@	TB-DLEZ-100-P
	25mm	***127631***	*TB-DLEZ-25M-PCR*	@	*TB-DLEZ-25M-P*
206	1-1/8	@	TB-DLEZ-102-PCR*	@	TB-DLEZ-102-P
	1-3/16	**127589**	TB-DLEZ-103-PCR	@	TB-DLEZ-103-P
	1-1/4	**127590**	TB-DLEZ-104S-PCR	@	TB-DLEZ-104S-P
	30mm	***127632***	*TB-DLEZ-30M-PCR*	@	*TB-DLEZ-30M-P*
207	1-1/4	**127591**	TB-DLEZ-104-PCR	@	TB-DLEZ-104-P
	1-3/8	@	TB-DLEZ-106-PCR*	@	TB-DLEZ-106-P
	1-7/16	**127592**	TB-DLEZ-107-PCR	@	TB-DLEZ-107-P
	35mm	***127633***	*TB-DLEZ-35M-PCR*	@	*TB-DLEZ-35M-P*

@ Assembled to order
*20 piece minimum

DODGE®



E-Z KLEEN Mounted Bearings

DLEZ NORMAL DUTY POLYMER HOUSED TAPPED BASE PILLOW BLOCKS

Series	Shaft Size	Weight lbs kg	A	B	C	D	J	L	M	N Thread Depth	R Bolt Hole Threads	S
204	3/4	0.88	1.28	3.25	1.48	2.00	2.65	1.71	1.31	0.40	3/8-16	0.78
	20mm	*0.41*	*32.5*	*82.6*	*37.6*	*50.8*	*67.3*	*43.4*	*33.4*	*10.2*	*M10x1.5*	*19.8*
205	7/8	1.12	1.44	3.25	1.49	2.00	2.89	1.99	1.44	0.40	3/8-16	0.88
	15/16	1.11										
	1	1.01										
	25mm	*0.47*	36.6	82.6	37.8	50.8	73.4	50.5	36.5	10.2	M10x1.5	22.4
206	1-1/8	1.79	1.56	4.38	1.57	3.00	3.38	2.22	1.69	0.45	7/16-14	0.98
	1-3/16	1.69										
	1-1/4	1.59										
	30mm	*0.77*	*39.6*	*111.3*	*39.9*	*76.2*	*85.9*	*56.4*	*42.9*	*11.4*	*M10x1.5*	*24.9*
207	1-1/4	2.62	1.75	4.63	1.89	3.25	3.82	2.69	1.88	0.55	1/2-13	1.08
	1-3/8	2.42										
	1-7/16	2.32										
	35mm	*1.11*	*44.5*	*117.6*	*48.0*	*82.6*	*97.0*	*68.3*	*47.6*	*14.0*	*M12x1.75*	*27.4*

SELECTION/DIMENSIONS

DODGE®



E-Z KLEEN Mounted Bearings

GTEZ NORMAL DUTY POLYMER HOUSED 2-BOLT FLANGE BEARINGS

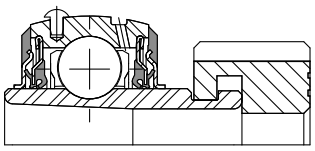

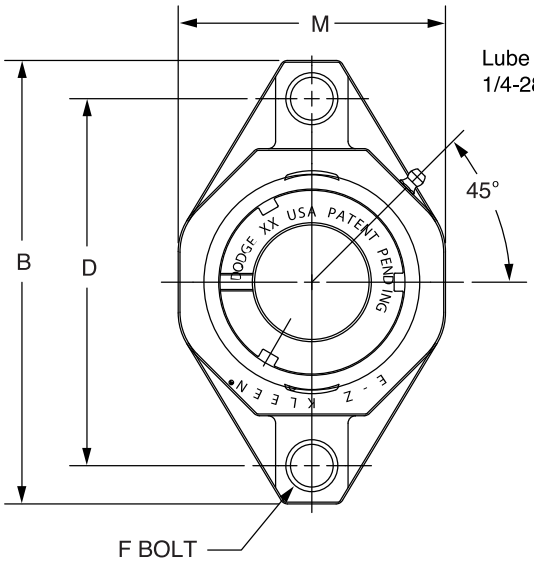

Lube fitting thread size - 1/4-28 tapered thread

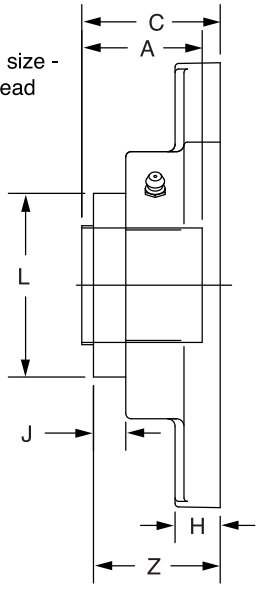

Series	Shaft Size	Complete Unit		Unit Without Adapter		Adapter & Nut Assembly	
		Part No.	Description	Part No.	Description	Part No.	Description
204	3/4	**129339**	F2B-GTEZ-012-PCR	**129548**	F2B-GTEZ-04-PCR	**129967**	AN-GT-04-012-CR
	20mm	***129340***	*F2B-GTEZ-20M-PCR*			***129980***	*AN-GT-04-20M-CR*
205	1	**129341**	F2B-GTEZ-100-PCR	**129549**	F2B-GTEZ-05-PCR	**129968**	AN-GT-05-100-CR
	25mm	***129342***	*F2B-GTEZ-25M-PCR*			***129981***	*AN-GT-05-25M-CR*
206	1 -1/8	**129394**	F2B-GTEZ-102-PCR	**129550**	F2B-GTEZ-06-PCR	**129969**	AN-GT-06-102-CR
	1 -3/16	**129343**	F2B-GTEZ-103-PCR			**129970**	AN-GT-06-103-CR
	1-1/4	**129344**	F2B-GTEZ-104S-PCR			**129971**	AN-GT-06-104S-CR
	30mm	***129345***	*F2B-GTEZ-30M-PCR*			***129982***	*AN-GT-06-30M-CR*
207	1-1/4	**129346**	F2B-GTEZ-104-PCR	**129551**	F2B-GTEZ-07-PCR	**129972**	AN-GT-07-104-CR
	1 -3/8	**073406**	F2B-GTEZ-106-PCR			**129973**	AN-GT-07-106-CR
	1 -7/16	**129347**	F2B-GTEZ-107-PCR			**129974**	AN-GT-07-107-CR
	35mm	***129348***	*F2B-GTEZ-35M-PCR*			***129983***	*AN-GT-07-35M-CR*
208	1-1/2	**129349**	F2B-GTEZ-108-PCR	**129552**	F2B-GTEZ-08-PCR	**129975**	AN-GT-08-108-CR
	40mm	***129350***	*F2B-GTEZ-40M-PCR*			***129984***	*AN-GT-08-40M-CR*
209	1-11/16	**129351**	F2B-GTEZ-111-PCR	**129553**	F2B-GTEZ-09-PCR	**129976**	AN-GT-09-111-CR
	1-3/4	**064147**	F2B-GTEZ-112-PCR			**129977**	AN-GT-09-112-CR
	45mm	***129352***	*F2B-GTEZ-45M-PCR*			***129985***	*AN-GT-09-45M-CR*
210	1-15/16	**129353**	F2B-GTEZ-115-PCR	**129554**	F2B-GTEZ-10-PCR	**129978**	AN-GT-10-115-CR
	2	**064503**	F2B-GTEZ-200-PCR			**129979**	AN-GT-10-200-CR
	50mm	***129354***	*F2B-GTEZ-50M-PCR*			***129986***	*AN-GT-10-50M-CR*

@ Assembled to order



E-Z KLEEN Mounted Bearings
GTEZ NORMAL DUTY POLYMER HOUSED 2-BOLT FLANGE BEARINGS

Size	Shaft Series	Weight lbs kg	A	B	C#	D	F Bolt Dia.	H	J	L	M	Z
204	3/4	0.77	1.48	4.45	1.72	3.54	3/8	0.53	0.61	1.50	2.35	1.73
	20mm	*0.36*	*37.6*	*113.0*	*43.7*	*90.0*	*M10*	*13.5*	*15.5*	*38.1*	*59.7*	*43.9*
205	1	1.01	1.46	4.92	1.70	3.90	3/8	0.54	0.58	1.80	2.71	1.72
	25mm	*0.47*	*37.1*	*125.0*	*43.2*	*99.0*	*M10*	*13.7*	*14.7*	*45.7*	*68.8*	*43.7*
206	1-1/8	1.56	1.61	5.58	1.84	4.59	3/8	0.60	0.64	2.08	3.19	1.88
	1-3/16	1.46										
	1-1/4	1.36										
	30mm	*0.57*	*40.9*	*141.7*	*46.7*	*116.5*	*M10*	*15.2*	*16.3*	*52.8*	*81.0*	*47.8*
207	1-1/4	2.18	1.62	6.31	1.86	5.12	1/2	0.62	0.64	2.38	3.69	1.92
	1-5/16	2.11										
	1-7/16	2.08										
	35mm	*1.00*	*41.1*	*160.3*	*47.2*	*130.0*	*M12*	*15.7*	*16.3*	*60.5*	*93.7*	*48.8*
208	1-1/2	2.75	1.84	6.77	2.12	5.65	1/2	0.67	0.67	2.62	4.06	2.12
	40mm	*1.26*	*46.7*	*172.0*	*53.8*	*143.5*	*M12*	*17.0*	*17.0*	*66.5*	*103.1*	*53.8*
209	1-5/8	3.11	1.85	7.07	2.12	5.85	9/16	0.72	0.69	2.86	4.31	2.15
	1-11/16	3.07										
	1-3/4	3.04										
	45mm	*1.41*	*47.0*	*179.6*	*53.8*	*148.5*	*M14*	*18.3*	*17.5*	*72.6*	*109.5*	*54.6*
210	1-15/16	3.64	1.86	7.47	2.26	6.18	5/8	0.76	0.70	3.13	4.50	2.29
	2	3.60										
	50mm	*1.67*	*47.2*	*189.7*	*57.4*	*157.0*	*M16*	*19.3*	*17.8*	*79.5*	*114.3*	*58.2*

#C dimension will vary slightly depending on true shaft diameter.

SELECTION/DIMENSIONS

DODGE®



E-Z KLEEN Mounted Bearings

SCEZ NORMAL DUTY POLYMER HOUSED 2-BOLT FLANGE BEARINGS

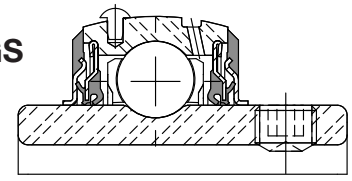

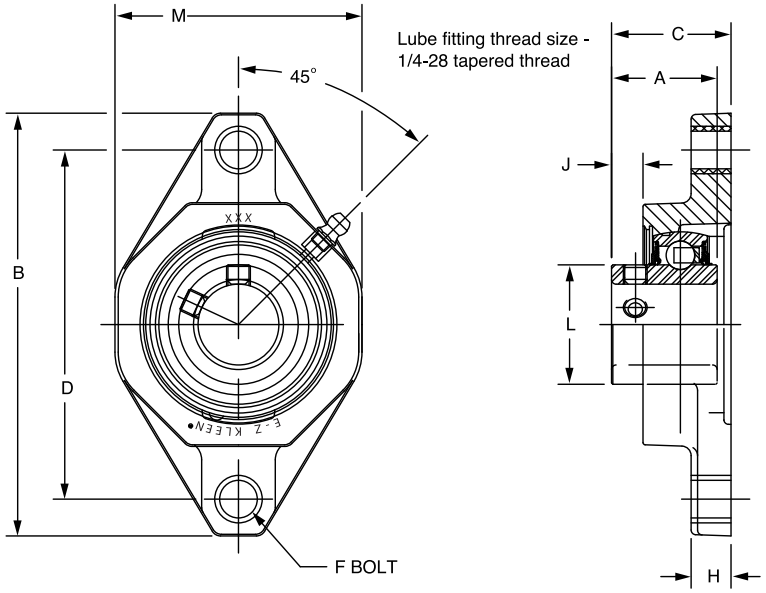

Series	Shaft Size	With Corrosion Resistant Insert		Standard Insert With Flingers		Weight lbs kg	A	B	C	D	F Bolt Dia.	H	J	L	M
		Part No.	Description	Part No.	Description										
204	1/2	**059823**	F2B-SCEZ-008L-PCR*	**@**	F2B-SCEZ-008L-P	0.48	1.23	4.45	1.43	3.54	3/8	0.53	0.31	1.12	2.35
	5/8	**058792**	F2B-SCEZ-010L-PCR*	**@**	F2B-SCEZ-010L-P	0.44									
	3/4	**127524**	F2B-SCEZ-012-PCR	**058404**	F2B-SCEZ-012-P	0.40									
	20mm	***127563***	*F2B-SCEZ-20M-PCR*	**@**	*F2B-SCEZ-20M-P*	*0.24*	*31.2*	*113.0*	*36.3*	*90.0*	*M10*	*13.5*	*7.9*	*28.4*	*59.7*
205	7/8	**@**	F2B-SCEZ-014-PCR*	**062837**	F2B-SCEZ-014-P	0.64	1.34	4.92	1.50	3.90	3/8	0.54	0.36	1.32	2.71
	15/16	**076841**	F2B-SCEZ-015-PCR*	**@**	F2B-SCEZ-015-P	0.60									
	1	**127525**	F2B-SCEZ-100-PCR	**057524**	F2B-SCEZ-100-P	0.56									
	25mm	***127564***	*F2B-SCEZ-25M-PCR*	**@**	*F2B-SCEZ-25M-P*	*0.28*	*34.0*	*125.0*	*38.1*	*99.0*	*M10*	*13.7*	*9.1*	*33.5*	*68.8*
206	1-1/8	**058470**	F2B-SCEZ-102-PCR*	**@**	F2B-SCEZ-102-P	0.88	1.52	5.58	1.69	4.59	3/8	0.60	0.45	1.57	3.19
	1-3/16	**127526**	F2B-SCEZ-103-PCR	**056449**	F2B-SCEZ-103-P	0.86									
	1-1/4	**127527**	F2B-SCEZ-104S-PCR	**057594**	F2B-SCEZ-104S-P	0.84									
	30mm	***127565***	*F2B-SCEZ-30M-PCR*	**@**	*F2B-SCEZ-30M-P*	*0.39*	*38.6*	*141.7*	*42.9*	*116.5*	*M10*	*15.2*	*11.4*	*39.9*	*81.0*
207	1-1/4	**127528**	F2B-SCEZ-104-PCR	**057687**	F2B-SCEZ-104-P	1.36	1.71	6.31	1.82	5.12	1/2	0.62	0.54	1.84	3.69
	1-5/16	**049380**	F2B-SCEZ-105-PCR*	**@**	F2B-SCEZ-105-P	1.32									
	1-3/8	**056893**	F2B-SCEZ-106-PCR*	**056526**	F2B-SCEZ-106-P	1.28									
	1-7/16	**127529**	F2B-SCEZ-107-PCR	**058941**	F2B-SCEZ-107-P	1.24									
	35mm	***127566***	*F2B-SCEZ-35M-PCR*	**@**	*F2B-SCEZ-35M-P*	*0.61*	*43.4*	*160.3*	*46.2*	*130.0*	*M12*	*15.7*	*13.7*	*46.7*	*93.7*
208	1-1/2	**127530**	F2B-SCEZ-108-PCR	**056580**	F2B-SCEZ-108-P	1.82	1.94	6.77	2.08	5.65	1/2	0.67	0.63	2.05	4.06
	1-5/8	**073651**	F2B-SCEZ-110-PCR*	**073638**	F2B-SCEZ-110-P	1.78									
	40mm	***127567***	*F2B-SCEZ-40M-PCR*	**@**	*F2B-SCEZ-40M-P*	*0.76*	*49.3*	*172.0*	*52.8*	*143.5*	*M12*	*17.0*	*16.0*	*52.1*	*103.1*
209	1-5/8	**@**	F2B-SCEZ-110L-PCR*	**@**	F2B-SCEZ-110L-P	2.04	1.94	7.07	2.08	5.85	9/16	0.72	0.62	2.22	4.31
	1-11/16	**127531**	F2B-SCEZ-111-PCR	**067986**	F2B-SCEZ-111-P	2.00									
	1-3/4	**@**	F2B-SCEZ-112-PCR	**065786**	F2B-SCEZ-112-P	1.96									
	45mm	***127568***	*F2B-SCEZ-45M-PCR*	**@**	*F2B-SCEZ-45M-P*	*0.88*	*49.3*	*179.6*	*52.8*	*148.5*	*M14*	*18.3*	*15.7*	*56.4*	*109.5*
210	1-15/16	**127532**	F2B-SCEZ-115-PCR	**058593**	F2B-SCEZ-115-P	2.12	1.94	7.47	2.22	6.18	5/8	0.76	0.63	2.43	4.50
	2	**049835**	F2B-SCEZ-200-PCR	**@**	F2B-SCEZ-200-P	2.08									
	50mm	***127569***	*F2B-SCEZ-50M-PCR*	**@**	*F2B-SCEZ-50M-P*	*0.96*	*49.3*	*189.7*	*56.4*	*157.0*	*M16*	*19.3*	*16.0*	*61.7*	*114.3*

@ Assembled to order
* 20 piece minimum

DODGE®



E-Z KLEEN Mounted Bearings

DLEZ NORMAL DUTY POLYMER HOUSED 2-BOLT FLANGE BEARINGS

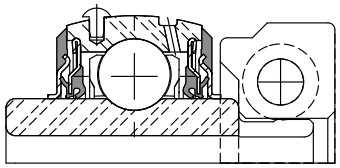

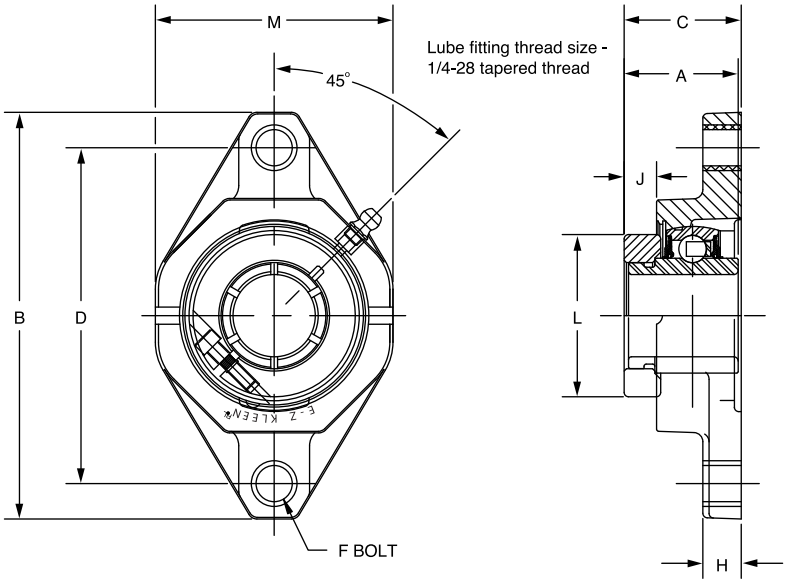

Series	Shaft Size	With Corrosion Resistant Insert		Standard Insert With Flingers		Weight lbs kg	A	B	C	D	F Bolt Dia.	H	J	L	M
		Part No.	Description	Part No.	Description										
204	3/4	**127602**	F2B-DLEZ-012-PCR	@	F2B-DLEZ-012-P	0.77	1.28	4.45	0.37	3.54	3/8	0.53	1.49	1.71	2.35
	20mm	***127641***	*F2B-DLEZ-20M-PCR*	@	*F2B-DLEZ-20M-P*	*0.36*	*32.5*	*113.0*	*9.4*	*90.0*	*M10*	*13.5*	*37.8*	*43.4*	*59.7*
205	7/8	@	F2B-DLEZ-014-PCR*	@	F2B-DLEZ-014-P	1.09	1.44	4.92	1.60	3.90	3/8	0.54	0.46	1.99	2.71
	15/16	@	F2B-DLEZ-015-PCR*	@	F2B-DLEZ-015-P	1.05									
	1	**127603**	F2B-DLEZ-100-PCR	@	F2B-DLEZ-100-P	1.01									
	25mm	***127642***	*F2B-DLEZ-25M-PCR*	@	*F2B-DLEZ-25M-P*	*0.47*	*36.6*	*125.0*	*40.6*	*99.0*	*M10*	*13.7*	*11.7*	*50.5*	*68.8*
206	1-1/8	@	F2B-DLEZ-102-PCR*	@	F2B-DLEZ-102-P	1.56	1.56	5.58	1.73	4.59	3/8	0.60	0.49	2.22	3.19
	1-3/16	**127604**	F2B-DLEZ-103-PCR	@	F2B-DLEZ-103-P	1.46									
	1-1/4	**127605**	F2B-DLEZ-104S-PCR	@	F2B-DLEZ-104S-P	1.36									
	30mm	***127643***	*F2B-DLEZ-30M-PCR*	@	*F2B-DLEZ-30M-P*	*0.57*	*39.6*	*141.7*	*43.9*	*116.5*	*M10*	*15.2*	*12.4*	*56.4*	*81.0*
207	1-1/4	**127606**	F2B-DLEZ-104-PCR	@	F2B-DLEZ-104-P	2.18	1.75	6.31	1.86	5.12	1/2	0.62	0.58	2.69	3.69
	1-3/8	@	F2B-DLEZ-106-PCR*	@	F2B-DLEZ-106-P	2.11									
	1-7/16	**127607**	F2B-DLEZ-107-PCR	@	F2B-DLEZ-107-P	2.08									
	35mm	***127644***	*F2B-DLEZ-35M-PCR*	@	*F2B-DLEZ-35M-P*	*1.00*	*44.5*	*160.3*	*47.2*	*130.0*	*M12*	*15.7*	*14.7*	*68.3*	*93.7*
208	1-1/2	**127608**	F2B-DLEZ-108-PCR	@	F2B-DLEZ-108-P	2.75	2.01	6.77	2.15	5.65	1/2	0.67	0.70	2.74	4.06
	40mm	***127645***	*F2B-DLEZ-40M-PCR*	@	*F2B-DLEZ-40M-P*	*1.26*	*51.1*	*172.0*	*54.6*	*143.5*	*M12*	*17.0*	*17.8*	*69.6*	*103.1*
209	1-5/8	@	F2B-DLEZ-110L-PCR*	@	F2B-DLEZ-110L-P	3.11	2.01	7.07	2.15	5.85	9/16	0.72	0.69	2.99	4.31
	1-11/16	**127609**	F2B-DLEZ-111-PCR	@	F2B-DLEZ-111-P	3.07									
	1-3/4	@	F2B-DLEZ-112-PCR*	@	F2B-DLEZ-112-P	3.04									
	45mm	***127646***	*F2B-DLEZ-45M-PCR*	@	*F2B-DLEZ-45M-P*	*1.41*	*51.1*	*179.6*	*54.6*	*148.5*	*M14*	*18.3*	*17.5*	*75.9*	*109.5*
210	1-15/16	**127610**	F2B-DLEZ-115-PCR	@	F2B-DLEZ-115-P	3.64	2.01	7.47	2.29	6.18	5/8	0.76	0.70	3.24	4.50
	2	**058515**	F2B-DLEZ-200-PCR	@	F2B-DLEZ-200-P	3.60									
	50mm	***127647***	*F2B-DLEZ-50M-PCR*	@	*F2B-DLEZ-50M-P*	*1.67*	*51.1*	*189.7*	*58.2*	*157.0*	*M16*	*19.3*	*17.8*	*82.3*	*114.3*

@ Assembled to order
*20 piece minimum

SELECTION/DIMENSIONS

DODGE®



E-Z KLEEN Mounted Bearings
GTEZ NORMAL DUTY POLYMER HOUSED FLANGE BEARINGS

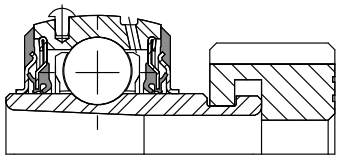

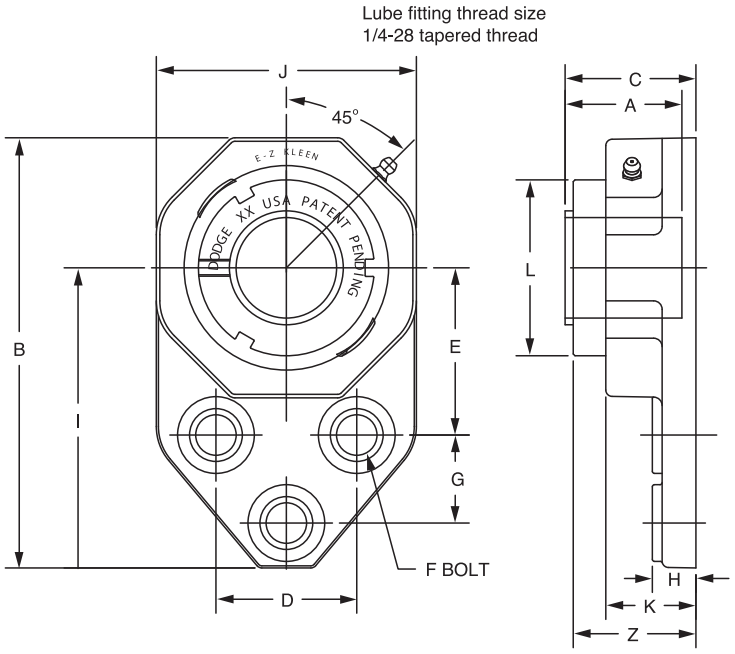

Series	Shaft Size	Complete Unit		Unit Without Adapter		Adapter & Nut Assembly	
		Part No.	Description	Part No.	Description	Part No	Description
204	3/4	**129627**	FB-GTEZ-012-PCR	**129555**	FB-GTEZ-04-PCR	**129967**	AN-GT-04-012-CR
205	1	**129629**	FB-GTEZ-100-PCR	**129556**	FB-GTEZ-05-PCR	**129968**	AN-GT-05-100-CR
206	1-1/8	**@**	FB-GTEZ-102-PCR	**129557**	FB-GTEZ-06-PCR	**129969**	AN-GT-06-102-CR
	1-3/16	**129631**	FB-GTEZ-103-PCR			**129970**	AN-GT-06-103-CR
	1-1/4	**129632**	FB-GTEZ-104S-PCR			**129971**	AN-GT-06-104S-CR
207	1-1/4	**129634**	FB-GTEZ-104-PCR	**129558**	FB-GTEZ-07-PCR	**129972**	AN-GT-07-104-CR
	1-3/8	**@**	FB-GTEZ-106-PCR			**129973**	AN-GT-07-106-CR
	1-7/16	**129635**	FB-GTEZ-107-PCR			**129974**	AN-GT-07-107-CR

@ Assembled to order

Series	Shaft Size	Weight lbs ks	A	B	C#	D	E	F Bolt Dia.	G	H	I	J	K	L	Z
204	3/4	0.75	1.48	4.39	1.72	1.50	1.69	3/8	0.88	0.53	3.22	2.34	1.12	1.50	1.73
205	1	1.12	1.46	4.91	1.70	1.63	1.81	3/8	1.13	0.54	3.56	2.71	1.14	1.80	1.72
206	1-1/8	1.77	1.61	5.48	1.84	1.88	2.06	3/8	1.25	0.60	3.88	3.20	1.24	2.08	1.88
	1-3/16	1.67													
	1-1/4	1.57													
207	1-1/4	2.65	1.62	6.11	1.86	2.00	2.38	1/2	1.25	0.62	4.26	3.69	1.28	2.38	1.92
	1-3/8	2.58													
	1-7/16	2.55													

#C dimension will vary slightly depending on true shaft diameter

DODGE®



E-Z KLEEN Mounted Bearings
SCEZ NORMAL DUTY POLYMER HOUSED FLANGE BRACKETS

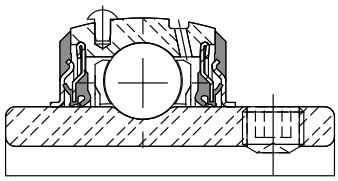

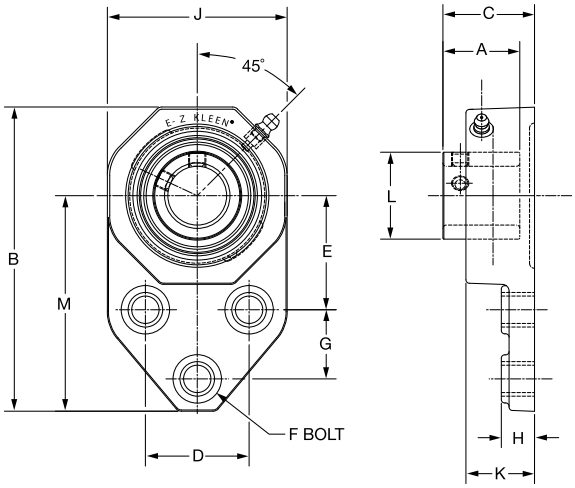

Series	Shaft Size	With Corrosion Resistant Insert		With Insert With Flingers	
		Part No.	Description	Part No.	Description
204	1/2	@	FB-SCEZ-008-PCR*	062317	FB-SCEZ-008L-P
	5/8	@	FB-SCEZ-010-PCR*	@	FB-SCEZ-010-P
	3/4	127533	FB-SCEZ-012-PCR	058336	FB-SCEZ-012-P
	20mm	***127570***	*FB-SCEZ-20M-PCR*	@	*FB-SCEZ-20M-P*
205	7/8	@	FB-SCEZ-014-PCR*	@	FB-SCEZ-014-P
	15/16	@	FB-SCEZ-015-PCR*	@	FB-SCEZ-015-P
	1	127534	FB-SCEZ-100-PCR	057908	FB-SCEZ-100-P
	25mm	***127521***	*FB-SCEZ-25M-PCR*	@	*FB-SCEZ-25M-P*
206	1-1/8	@	FB-SCEZ-102-PCR*	@	FB-SCEZ-102-P
	1-3/16	127535	FB-SCEZ-103-PCR	@	FB-SCEZ-103-P
	1-1/4	127536	FB-SCEZ-104S-PCR	058311	FB-SCEZ-104S-P
	30mm	***127522***	*FB-SCEZ-30M-PCR*	@	*FB-SCEZ-30M-P*
207	1-1/4	127537	FB-SCEZ-104-PCR	@	FB-SCEZ-104-P
	1-5/16	058648	FB-SCEZ-105-PCR*	@	FB-SCEZ-105-P
	1-3/8	@	FB-SCEZ-106-PCR*	@	FB-SCEZ-106-P
	1-7/16	127538	FB-SCEZ-107-PCR	@	FB-SCEZ-107-P
	35mm	***127523***	*FB-SCEZ-35M-PCR*	@	*FB-SCEZ-35M-P*

@ Assembled to order * 20 piece minimum

Series	Shaft Size	Weight lbs kg	A	B	C	D	E	F Bolt Dia.	G	H	I	J	K	L
204	1/2	0.51	1.23	4.39	1.44	1.50	1.69	3/8	0.88	0.53	3.22	2.34	1.12	1.12
	5/8	0.49												
	3/4	0.47												
	20mm	*0.23*	*31.2*	*111.5*	*36.6*	*38.1*	*42.9*	*M10*	*22.4*	*13.5*	*81.8*	*59.4*	*28.4*	*28.4*
205	7/8	0.73	1.34	4.91	1.50	1.63	1.81	3/8	1.13	0.54	3.56	2.71	1.14	1.32
	15/16	0.71												
	1	0.69												
	25mm	*0.32*	*34.0*	*124.7*	*38.1*	*41.4*	*46.0*	*M10*	*28.7*	*13.7*	*90.4*	*68.8*	*29.0*	*33.5*
206	1-1/8	1.09	1.52	5.48	1.69	1.88	2.06	3/8	1.25	0.60	3.88	3.20	1.24	1.57
	1-3/16	1.07												
	1-1/4	1.05												
	30mm	*0.48*	*38.6*	*139.2*	*42.9*	*47.8*	*52.3*	*M10*	*31.8*	*15.2*	*98.6*	*81.3*	*31.5*	*39.9*
207	1-1/4	1.87	1.71	6.11	1.82	2.00	2.38	1/2	1.25	0.62	4.26	3.69	1.28	1.84
	1-5/16	1.81												
	1-3/8	1.76												
	1-7/16	1.71												
	35mm	*0.83*	*43.4*	*155.2*	*46.2*	*50.8*	*60.5*	*M12*	*31.8*	*15.7*	*108.2*	*93.7*	*32.5*	*46.7*

FEATURES/BENEFITS PAGE B2-3 | HOW TO ORDER/NOMENCLATURE PAGE B2-8 | SELECTION/DIMENSIONS PAGE B2-24 | ACCESSORIES PAGE B2-77

SELECTION/DIMENSIONS

E-Z KLEEN Mounted Bearings
DLEZ NORMAL DUTY POLYMER HOUSED FLANGE BRACKETS

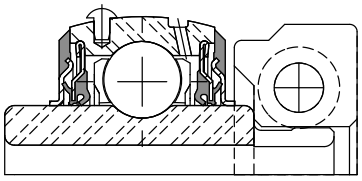

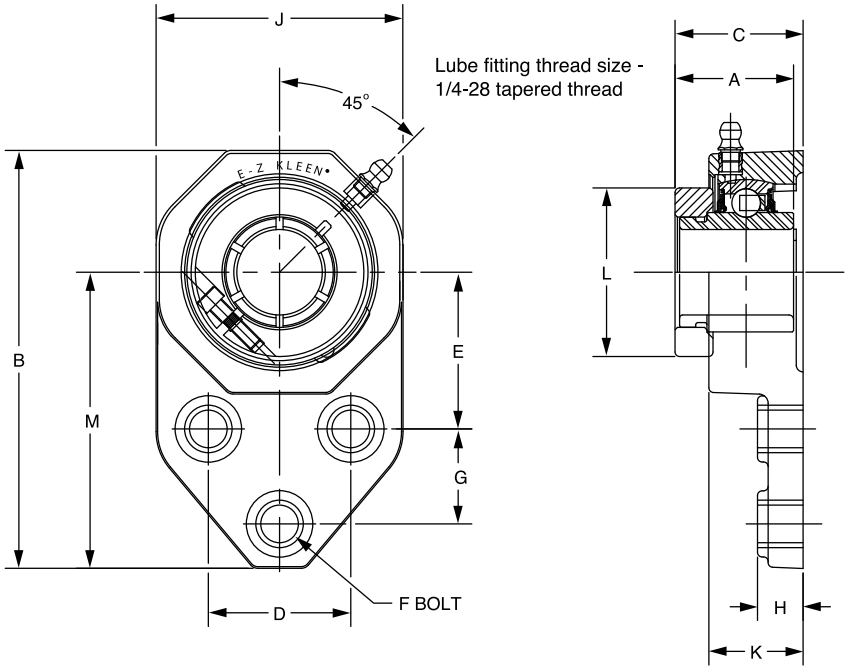

Series	Shaft Size	With Corrosion Resistant Insert		With Insert With Flingers	
		Part No.	Description	Part No.	Description
204	3/4	**127611**	FB-DLEZ-012-PCR	@	FB-DLEZ-012-P
	20mm	***127648***	*FB-DLEZ-20M-PCR*	@	*FB-DLEZ-20M-P*
205	7/8	@	FB-DLEZ-014-PCR*	@	FB-DLEZ-014-P
	15/16	@	FB-DLEZ-015-PCR*	@	FB-DLEZ-015-P
	1	**127612**	FB-DLEZ-100-PCR	@	FB-DLEZ-100-P
	25mm	***127649***	*FB-DLEZ-25M-PCR*	@	*FB-DLEZ-25M-P*
206	1-1/8	@	FB-DLEZ-102-PCR*	@	FB-DLEZ-102-P
	1-3/16	**127613**	FB-DLEZ-103-PCR	@	FB-DLEZ-103-P
	1-1/4	**127614**	FB-DLEZ-104S-PCR	@	FB-DLEZ-104S-P
	30mm	***127650***	*FB-DLEZ-30M-PCR*	@	*FB-DLEZ-30M-P*
207	1-1/4	**127615**	FB-DLEZ-104-PCR	@	FB-DLEZ-104-P
	1-3/8	@	FB-DLEZ-106-PCR*	@	FB-DLEZ-106-P
	1-7/16	**127616**	FB-DLEZ-107-PCR	@	FB-DLEZ-107-P
	35mm	***127651***	*FB-DLEZ-35M-PCR*	@	*FB-DLEZ-35M-P*

@ Assembled to order * 20 piece minimum



E-Z KLEEN Mounted Bearings
DLEZ NORMAL DUTY POLYMER HOUSED FLANGE BRACKETS

Series	Shaft Size	Weight lbs kg	A	B	C	D	E	F Bolt Dia.	G	H	I	J	K	L
204	3/4	0.75	1.28	4.39	0.37	1.50	1.69	3/8	0.88	0.53	3.22	2.34	1.12	1.71
	20mm	*0.35*	*32.5*	*111.5*	*9.4*	*38.1*	*42.9*	*M10*	*22.4*	*13.5*	*81.8*	*59.4*	*28.4*	*43.4*
205	7/8	1.32	1.44	4.91	1.60	1.63	1.81	3/8	1.13	0.54	3.56	2.71	1.14	1.99
	15/16	1.22												
	1	1.12												
	25mm	*0.51*	*36.6*	*124.7*	*40.6*	*41.4*	*46.0*	*M10*	*28.7*	*13.7*	*90.4*	*68.8*	*29.0*	*50.5*
206	1-1/8	1.77	1.56	5.48	1.73	1.88	2.06	3/8	1.25	0.60	3.88	3.20	1.24	2.22
	1-3/16	1.67												
	1-1/4	1.57												
	30mm	*0.76*	*39.6*	*139.2*	*43.9*	*47.8*	*52.3*	*M10*	*31.8*	*15.2*	*98.6*	*81.3*	*31.5*	*56.4*
207	1-1/4	2.65	1.75	6.11	1.86	2.00	2.38	1/2	1.25	0.62	4.26	3.69	1.28	2.69
	1-3/8	2.58												
	1-7/16	2.55												
	35mm	*1.22*	*44.5*	*155.2*	*47.2*	*50.8*	*60.5*	*M12*	*31.8*	*15.7*	*108.2*	*93.7*	*32.5*	*68.3*

SELECTION/DIMENSIONS

E-Z KLEEN Mounted Bearings

GTEZ NORMAL DUTY POLYMER HOUSED 4-BOLT FLANGE BEARINGS

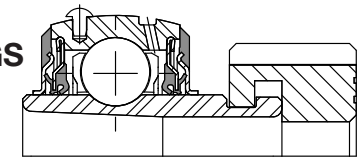

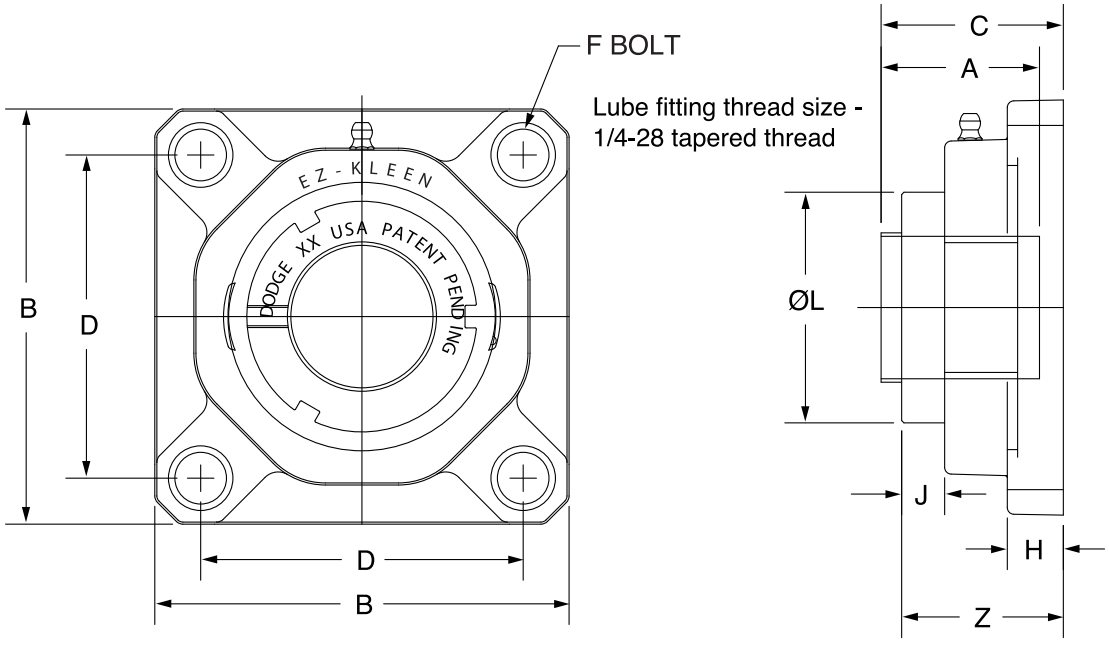

Series	Shaft Size	Complete Unit		Unit Without Adapter		Adapter & Nut Assembly	
		Part No.	Description	Part No.	Description	Part No.	Description
204	3/4	**129706**	F4B-GTEZ-012-PCR	**129541**	F4B-GTEZ-04-PCR	**129967**	AN-GT-04-012-CR
	20mm	***129707***	*F4B-GTEZ-20M-PCR*			***129980***	*AN-GT-04-20M-CR*
205	1	**129708**	F4B-GTEZ-100-PCR	**129542**	F4B-GTEZ-05-PCR	**129968**	AN-GT-05-100-CR
	25mm	***129709***	F4B-GTEZ-25M-PCR			***129981***	AN-GT-05-25M-CR
206	1-1/8	**068687**	F4B-GTEZ-102-PCR	**129543**	F4B-GTEZ-06-PCR	**129969**	AN-GT-06-102-CR
	1-3/16	**129710**	F4B-GTEZ-103-PCR			**129970**	AN-GT-06-103-CR
	1-1/4	**129711**	F4B-GTEZ-104S-PCR			**129971**	AN-GT-06-104S-CR
	30mm	***129712***	*F4B-GTEZ-30M-PCR*			***129982***	*AN-GT-06-30M-CR*
207	1-1/4	**129713**	F4B-GTEZ-104-PCR	**129544**	F4B-GTEZ-07-PCR	**129972**	AN-GT-07-104-CR
	1-3/8	**@**	F4B-GTEZ-106-PCR			**129973**	AN-GT-07-106-CR
	1-7/16	**129714**	F4B-GTEZ-107-PCR			**129974**	AN-GT-07-107-CR
	35mm	***129715***	*F4B-GTEZ-35M-PCR*			***129983***	*AN-GT-07-35M-CR*
208	1-1/2	**129716**	F4B-GTEZ-108-PCR	**129545**	F4B-GTEZ-08-PCR	**129975**	AN-GT-08-108-CR
	40mm	***129717***	*F4B-GTEZ-40M-PCR*			***129984***	*AN-GT-08-40M-CR*
209	1-11/16	**129718**	F4B-GTEZ-111-PCR	**129546**	F4B-GTEZ-09-PCR	**129976**	AN-GT-09-111-CR
	1-3/4	**064584**	F4B-GTEZ-112-PCR			**129977**	AN-GT-09-112-CR
	45mm	***129705***	*F4B-GTEZ-45M-PCR*			***129985***	*AN-GT-09-45M-CR*
210	1-15/16	**129719**	F4B-GTEZ-115-PCR	**129547**	F4B-GTEZ-10-PCR	**129978**	AN-GT-10-115-CR
	2	**129395**	F4B-GTEZ-200-PCR			**129979**	AN-GT-10-200-CR
	50mm	***129720***	*F4B-GTEZ-50M-PCR*			***129986***	*AN-GT-10-50M-CR*

@ Assembled to order

DODGE®



E-Z KLEEN Mounted Bearings

GTEZ NORMAL DUTY POLYMER HOUSED 4-BOLT FLANGE BEARINGS

Series	Shaft Size	Weight lbs kg	A	B	C#	D	F Bolt Dia.	H	J	L	Z
204	3/4	0.50	1.48	3.38	1.72	2.50	3/8	0.53	0.59	1.50	1.73
	20mm	*0.30*	*37.6*	*85.9*	*43.7*	*63.5*	*M10*	*13.5*	*15.0*	*38.1*	*43.9*
205	1	0.90	1.46	3.75	1.70	2.75	3/8	0.54	0.58	1.80	1.72
	25mm	*0.30*	*37.1*	*95.3*	*43.2*	*69.9*	*M10*	*13.7*	*14.7*	*45.7*	*43.7*
206	1-1/8 1-3/16 1-1/4	1.20	1.61	4.25	1.84	3.25	3/8	0.60	0.64	2.08	1.88
	30mm	*0.50*	*40.9*	*108.0*	*46.7*	*82.6*	*M10*	*15.2*	*16.3*	*52.8*	*47.8*
207	1-1/4 1-3/8 1-7/16	1.60	1.62	4.65	1.86	3.63	1/2	0.62	0.63	2.38	1.92
	35mm	*0.70*	*41.1*	*118.1*	*47.2*	*92.1*	*M12*	*15.7*	*16.0*	*60.5*	*48.8*
208	1-1/2	2.00	1.84	5.12	2.12	4.00	1/2	0.67	0.66	2.62	2.12
	40mm	*0.90*	*46.7*	*130.0*	*53.8*	*101.6*	*M12*	*17.0*	*16.8*	*66.5*	*53.8*
209	1-11/16 1-3/4	2.30	1.85	5.38	2.12	4.13	9/16	0.72	0.69	2.86	2.15
	45mm	*1.00*	*47.0*	*136.7*	*53.8*	*104.8*	*M14*	*18.3*	*17.5*	*72.6*	*54.6*
210	1-15/16 2	2.30	1.86	5.62	2.26	4.38	5/8	0.76	0.70	3.13	2.29
	50mm	*1.10*	*47.2*	*142.7*	*57.4*	*111.2*	*M16*	*19.3*	*17.8*	*79.5*	*58.2*

#C dimension will vary slightly depending on true shaft diameter.

SELECTION/DIMENSIONS

DODGE®



E-Z KLEEN Mounted Bearings

SCEZ NORMAL DUTY POLYMER HOUSED 4-BOLT FLANGE BEARINGS

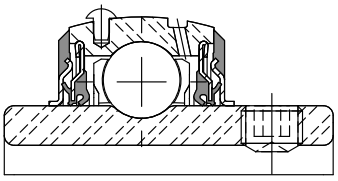

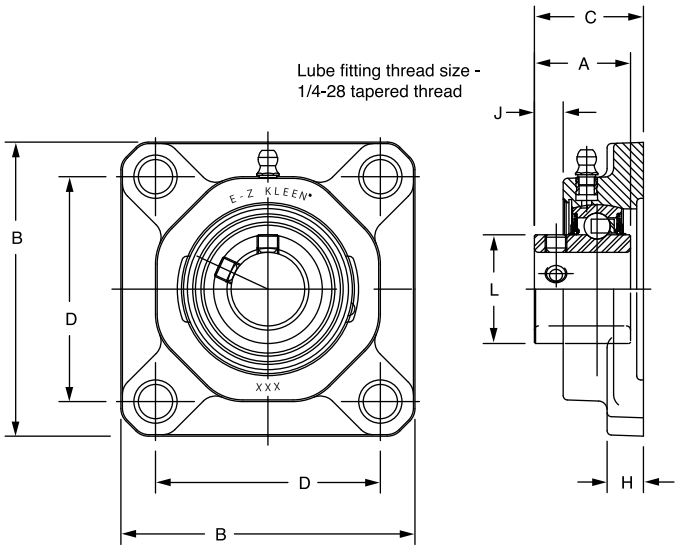

Series	Shaft Size	With Corrosion Resistant Insert		With Insert With Flingers		Weight lbs kg	A	B	C	D	F Bolt Dia.	H	J	L
		Part No.	Description	Part No.	Description									
204	1/2	**073224**	F4B-SCEZ-008L-PCR*	**@**	F4B-SCEZ-008L-P	0.59	1.23	3.38	1.46	2.50	3/8	0.53	0.30	1.12
	5/8	**@**	F4B-SCEZ-010L-PCR*	**@**	F4B-SCEZ-010L-P	0.57								
	3/4	**127515**	F4B-SCEZ-012-PCR	**056440**	F4B-SCEZ-012-P	0.55								
	20mm	***127556***	*F4B-SCEZ-20M-PCR*	**@**	*F4B-SCEZ-20M-P*	*0.27*	*31.2*	*85.9*	*37.0*	*63.5*	*M10*	*13.5*	*7.6*	*28.4*
205	7/8	**068424**	F4B-SCEZ-014-PCR*	**@**	F4B-SCEZ-014-P	0.71	1.34	3.75	1.52	2.75	3/8	0.54	0.36	1.32
	15/16	**@**	F4B-SCEZ-015-PCR*	**@**	F4B-SCEZ-015-P	0.69								
	1	**127516**	F4B-SCEZ-100-PCR	**058910**	F4B-SCEZ-100-P	0.67								
	25mm	***127557***	*F4B-SCEZ-25M-PCR*	**@**	*F4B-SCEZ-25M-P*	*0.32*	*34.0*	*95.3*	*38.6*	*69.9*	*M10*	*13.7*	*9.1*	*33.5*
206	1-1/8	**068053**	F4B-SCEZ-102-PCR*	**@**	F4B-SCEZ-102-P	0.89	1.52	4.25	1.72	3.25	3/8	0.60	0.45	1.57
	1-3/16	**127517**	F4B-SCEZ-103-PCR	**@**	F4B-SCEZ-103-P	0.86								
	1-1/4	**127518**	F4B-SCEZ-104S-PCR	**058594**	F4B-SCEZ-104S-P	0.84								
	30mm	***127558***	*F4B-SCEZ-30M-PCR*	**@**	*F2B-SCEZ-30M-P*	*0.39*	*38.6*	*108.0*	*43.7*	*82.6*	*M10*	*15.2*	*11.4*	*39.9*
207	1-1/4	**127519**	F4B-SCEZ-104-PCR	**074632**	F4B-SCEZ-104-P	1.40	1.71	4.65	1.84	3.63	1/2	0.62	0.53	1.84
	1-5/16	**@**	F4B-SCEZ-105-PCR*	**@**	F4B-SCEZ-105-P	1.35								
	1-3/8	**058294**	F4B-SCEZ-106-PCR*	**065780**	F4B-SCEZ-106-P	1.30								
	1-7/16	**127520**	F4B-SCEZ-107-PCR	**@**	F4B-SCEZ-107-P	1.24								
	35mm	***127559***	*F4B-SCEZ-35M-PCR*	**@**	*F4B-SCEZ-35M-P*	*0.61*	*43.4*	*118.1*	*46.7*	*92.1*	*M12*	*15.7*	*13.5*	*46.7*
208	1-1/2	**127521**	F4B-SCEZ-108-PCR	**058595**	F4B-SCEZ-108-P	1.82	1.94	5.12	2.10	4.00	1/2	0.67	0.62	2.05
	1-5/8	**062628**	F4B-SCEZ-110-PCR*	**@**	F4B-SCEZ-110-P	1.68								
	40mm	***127560***	*F4B-SCEZ-40M-PCR*	**@**	*F4B-SCEZ-40M-P*	*0.76*	*49.3*	*130.0*	*53.3*	*101.6*	*M12*	*17.0*	*15.7*	*52.1*
209	1-5/8	**@**	F4B-SCEZ-110L-PCR*	**@**	F4B-SCEZ-110L-P	2.09	1.94	5.38	2.10	4.13	9/16	0.72	0.62	2.22
	1-11/16	**127522**	F4B-SCEZ-111-PCR	**@**	F4B-SCEZ-111-P	2.00								
	1-3/4	**057907**	F4B-SCEZ-112-PCR*	**@**	F4B-SCEZ-112-P	1.93								
	45mm	***127561***	*F4B-SCEZ-45M-PCR*	**@**	*F4B-SCEZ-45M-P*	*0.88*	*49.3*	*136.7*	*53.3*	*104.8*	*M14*	*18.3*	*15.7*	*56.4*
210	1-15/16	**127523**	F4B-SCEZ-115-PCR	**@**	F4B-SCEZ-115-P	2.12	1.94	5.62	2.24	4.38	5/8	0.76	0.63	2.43
	2	**057899**	F4B-SCEZ-200-PCR	**@**	F4B-SCEZ-200-P	2.03								
	50mm	***127562***	*F4B-SCEZ-50M-PCR*	**@**	*F4B-SCEZ-50M-P*	*0.96*	*49.3*	*142.7*	*56.9*	*111.2*	*M16*	*19.3*	*16.0*	*61.7*

@ Assembled to order * 20 piece minimum

DODGE®



E-Z KLEEN Mounted Bearings
DLEZ NORMAL DUTY POLYMER HOUSED 4-BOLT FLANGE BEARINGS

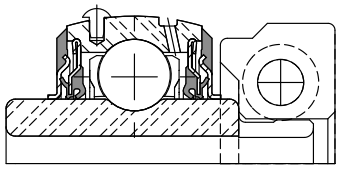

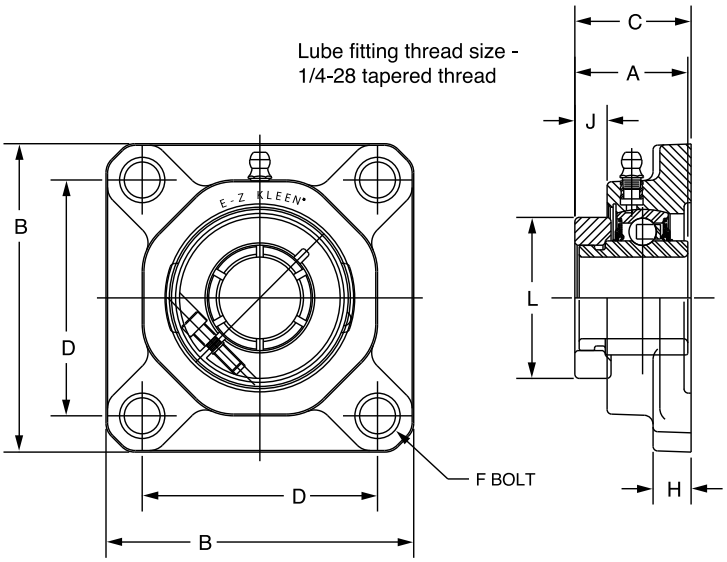

Series	Shaft Size	With Corrosion Resistant Insert		Standard Insert With Flingers		Weight lbs kg	A	B	C	D	F Bolt Dia.	H	J	L
		Part No.	Description	Part No.	Description									
204	3/4	**127593**	F4B-DLEZ-012-PCR	@	F4B-DLEZ-012-P	0.50	1.28	3.38	0.37	2.50	3/8	0.53	1.49	1.71
	20mm	***127634***	*F4B-DLEZ-20M-PCR*	@	*F4B-DLEZ-20M-P*	*0.30*	*32.5*	*85.9*	*9.4*	*63.5*	*M10*	*13.5*	*37.8*	*43.4*
205	7/8	@	F4B-DLEZ-014-PCR*	@	F4B-DLEZ-014-P	0.90	1.44	3.75	1.60	2.75	3/8	0.54	0.46	1.99
	15/16	@	F4B-DLEZ-015-PCR*	@	F4B-DLEZ-015-P	0.80								
	1	**127594**	F4B-DLEZ-100-PCR	@	F4B-DLEZ-100-P	0.70								
	25mm	***127635***	*F4B-DLEZ-25M-PCR*	@	*F4B-DLEZ-25M-P*	*0.30*	*36.6*	*95.3*	*40.6*	*69.9*	*M10*	*13.7*	*11.7*	*50.5*
206	1-1/8	@	F4B-DLEZ-102-PCR*	@	F4B-DLEZ-102-P	1.20	1.56	4.25	1.73	3.25	3/8	0.60	0.49	2.22
	1-3/16	**127595**	F4B-DLEZ-103-PCR	@	F4B-DLEZ-103-P	1.10								
	1-1/4	**127596**	F4B-DLEZ-104S-PCR	@	F4B-DLEZ-104S-P	1.10								
	30mm	***127636***	*F4B-DLEZ-30M-PCR*	@	*F4B-DLEZ-30M-P*	*0.50*	*39.6*	*108.0*	*43.9*	*82.6*	*M10*	*15.2*	*12.4*	*56.4*
207	1-1/4	**127597**	F4B-DLEZ-104-PCR	@	F4B-DLEZ-104-P	1.60	1.75	4.65	1.86	3.63	1/2	0.62	0.58	2.69
	1-3/8	@	F4B-DLEZ-106-PCR*	@	F4B-DLEZ-106-P	1.50								
	1-7/16	**127598**	F4B-DLEZ-107-PCR	@	F4B-DLEZ-107-P	1.40								
	35mm	***127637***	*F4B-DLEZ-35M-PCR*	@	*F4B-DLEZ-35M-P*	*0.70*	*44.5*	*118.1*	*47.2*	*92.1*	*M12*	*15.7*	*14.7*	*68.3*
208	1-1/2	**127599**	F4B-DLEZ-108-PCR	@	F4B-DLEZ-108-P	2.00	2.01	5.12	2.15	4.00	1/2	0.67	0.70	2.74
	40mm	***127638***	*F4B-DLEZ-40M-PCR*	@	*F4B-DLEZ-40M-P*	*0.90*	*51.1*	*130.0*	*54.6*	*101.6*	*M12*	*17.0*	*17.8*	*69.6*
209	1-5/8	@	F4B-DLEZ-110L-PCR*	@	F4B-DLEZ-110L-P	2.30	2.01	5.38	2.15	4.13	9/16	0.72	0.69	2.99
	1-11/16	**127600**	F4B-DLEZ-111-PCR	@	F4B-DLEZ-111-P	2.20								
	1-3/4	@	F4B-DLEZ-112-PCR*	@	F4B-DLEZ-112-P	2.10								
	45mm	***127639***	*F4B-DLEZ-45M-PCR*	@	*F4B-DLEZ-45M-P*	*1.00*	*51.1*	*136.7*	*54.6*	*104.8*	*M14*	*18.3*	*17.5*	*75.9*
210	1-15/16	**127601**	F4B-DLEZ-115-PCR	@	F4B-DLEZ-115-P	2.30	2.01	5.62	2.29	4.38	5/8	0.76	0.70	3.24
	2	**058514**	F4B-DLEZ-200-PCR*	@	F4B-DLEZ-200-P	2.20								
	50mm	***127640***	*F4B-DLEZ-50M-PCR*	@	*F4B-DLEZ-50M-P*	*1.10*	*51.1*	*142.7*	*58.2*	*111.2*	*M16*	*19.3*	*17.8*	*82.3*

@ Assembled to order * 20 piece minimum

SELECTION/DIMENSIONS

E-Z KLEEN Mounted Bearings

GTEZ NORMAL DUTY POLYMER HOUSED WIDE SLOT TAKE-UP BEARINGS

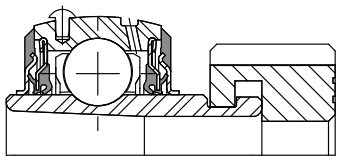

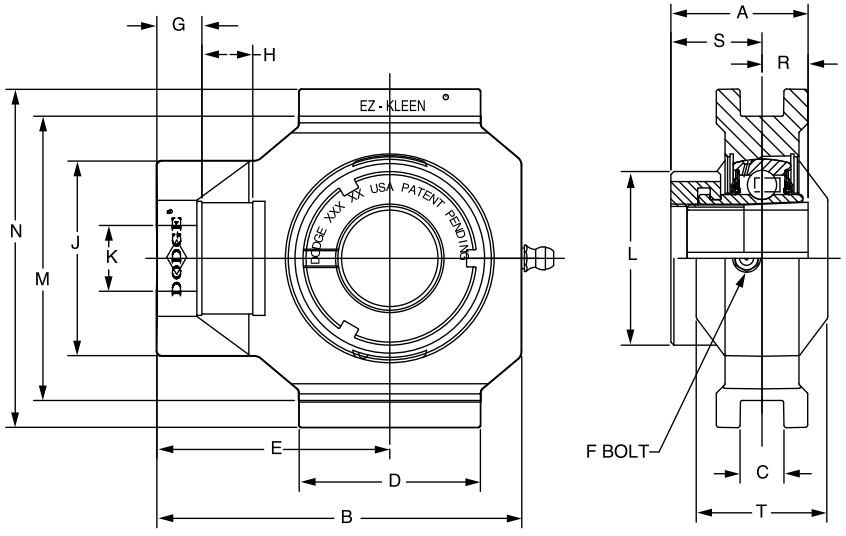

Series	Shaft Size	With Corrosion Resistant Insert		Unit without Adapter & Nut		Adapter & Nut Assembly	
		Part No.	Description	Part No.	Description	Part No.	Description
204	3/4	**136315**	WSTU-GTEZ-012-PCR	**136327**	WSTU-GTEZ-04-PCR	**129967**	AN-GT-04-012-CR
	20mm	***136323***	*WSTU-GTEZ-20M-PCR*			***129980***	*AN-GT-04-20M-CR*
205	1	**136316**	WSTU-GTEZ-100-PCR	**136328**	WSTU-GTEZ-05-PCR	**129968**	AN-GT-05-100-CR
	25mm	***136324***	*WSTU-GTEZ-25M-PCR*			***129981***	*AN-GT-05-25M-CR*
206	1-1/8	**136317**	WSTU-GTEZ-102-PCR	**136329**	WSTU-GTEZ-06-PCR	**129969**	AN-GT-06-102-CR
	1-3/16	**136318**	WSTU-GTEZ-103-PCR			**129970**	AN-GT-06-103-CR
	1-1/4	**136319**	WSTU-GTEZ-104S-PCR			**129971**	AN-GT-06-104S-CR
	30mm	***136325***	*WSTU-GTEZ-30M-PCR*			***129982***	*AN-GT-06-30M-CR*
207	1-1/4	**136320**	WSTU-GTEZ-104-PCR	**136330**	WSTU-GTEZ-07-PCR	**129972**	AN-GT-07-104-CR
	1-3/8	**136321**	WSTU-GTEZ-106-PCR			**129973**	AN-GT-07-106-CR
	1-7/16	**136322**	WSTU-GTEZ-107-PCR			**129974**	AN-GT-07-107-CR
	35mm	***136326***	*WSTU-GTEZ-35M-PCR*			***129983***	*AN-GT-07-35M-CR*

DODGE®



E-Z KLEEN Mounted Bearings

GTEZ NORMAL DUTY POLYMER HOUSED WIDE SLOT TAKE-UP BEARINGS

Series	Shaft Size	Weight lbs kg	Take-Up Frame No. Ref.	A	B	C	D	E	F Thd Shaft	G	H
204	3/4	0.90	WS300	1.48	3.81	0.530	2.10	2.50	5/8	0.56	0.65
	20mm	*0.40*		*37.6*	*96.8*	*13.46*	*53.3*	*63.5*	*15.9*	*14.2*	*16.5*
205	1	1.20	WS300	1.46	3.97	0.530	2.20	2.56	5/8	0.56	0.65
	25mm	*0.50*		*37.1*	*100.8*	*13.46*	*55.9*	*65.0*	*15.9*	*14.2*	*16.5*
206	1-1/8	1.80	WS308	1.61	4.49	0.530	2.29	2.86	3/4	0.56	0.65
	1-3/16	1.70									
	1-1/4	1.60									
	30mm	*0.80*		*40.9*	*114.0*	*13.46*	*58.2*	*72.6*	*19.1*	*14.2*	*16.5*
207	1-1/4	2.40	WS308	1.62	4.99	0.530	2.25	3.10	3/4	0.56	0.65
	1-3/8	2.30									
	1-7/16	2.30									
	35mm	*1.08*		*41.1*	*126.7*	*13.46*	*57.2*	*78.7*	*19.1*	*14.2*	*16.5*

Series	Shaft Size	J	K	L	M	N	R	S	T	Z
204	3/4	2.10	0.71	1.50	3.015/2.985	3.63	0.46	1.02	1.38	1.73
	20mm	*53.3*	*18.0*	*38.1*	*76.58/75.82*	*92.2*	*11.7*	*25.9*	*35.1*	*43.9*
205	1	2.12	0.71	1.80	3.030/3.000	3.63	0.48	0.98	1.38	1.72
	25mm	*53.8*	*18.0*	*45.7*	*76.96/76.20*	*92.2*	*12.2*	*24.9*	*35.1*	*43.7*
206	1-1/8	2.41	0.81	2.08	3.525/3.495	4.20	0.52	1.09	1.62	1.88
	1-3/16									
	1-1/4									
	30mm	*61.2*	*20.6*	*52.8*	*89.54/88.77*	*106.7*	*13.2*	*27.7*	*41.1*	*47.8*
207	1-1/4	2.41	0.81	2.38	3.540/3.510	4.20	0.54	1.08	1.62	1.92
	1-3/8									
	1-7/16									
	35mm	*61.2*	*20.6*	*60.5*	*89.93/89.15*	*106.7*	*13.7*	*27.4*	*41.1*	*48.8*

SELECTION/DIMENSIONS

E-Z KLEEN Mounted Bearings

SCEZ NORMAL DUTY POLYMER HOUSED WIDE SLOT TAKE-UP BEARINGS

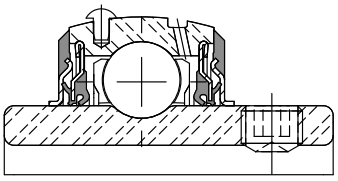

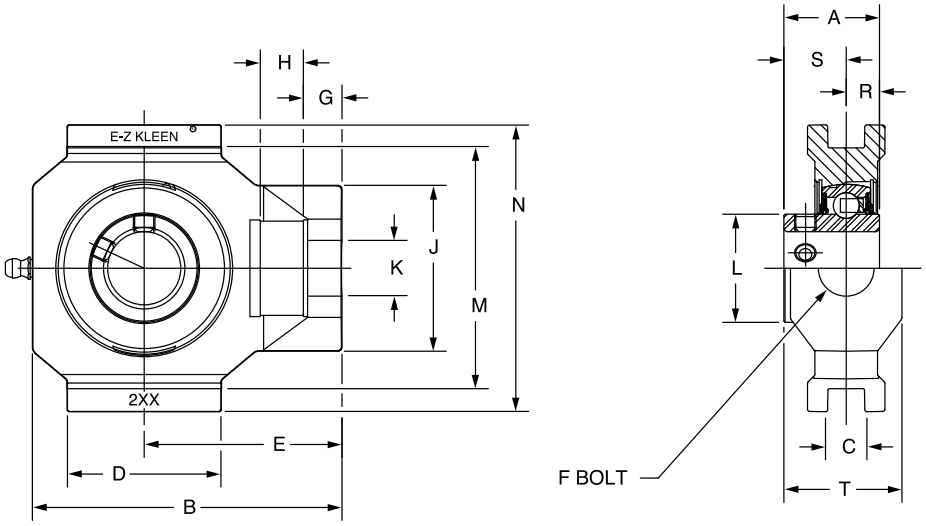

Series	Shaft Size	With Corrosion Resistant Insert		Standard Insert With Flingers	
		Part No.	Description	Part No.	Description
204	1/2	@	WSTU-SCEZ-008L-PCR*	@	WSTU-SCEZ-008L-P
	5/8	@	WSTU-SCEZ-010L-PCR*	@	WSTU-SCEZ-010L-P
	3/4	**127539**	WSTU-SCEZ-012-PCR	@	WSTU-SCEZ-012-P
	20mm	***127574***	*WSTU-SCEZ-20M-PCR*	@	*WSTU-SCEZ-20M-P*
205	7/8	@	WSTU-SCEZ-014-PCR*	@	WSTU-SCEZ-014-P
	15/16	@	WSTU-SCEZ-015-PCR*	@	WSTU-SCEZ-015-P
	1	**127540**	WSTU-SCEZ-100-PCR	**058940**	WSTU-SCEZ-100-P
	25mm	***127575***	*WSTU-SCEZ-25M-PCR*	@	*WSTU-SCEZ-25M-P*
206	1-1/8	@	WSTU-SCEZ-102-PCR*	@	WSTU-SCEZ-102-P
	1-3/16	**127541**	WSTU-SCEZ-103-PCR	@	WSTU-SCEZ-103-P
	1-1/4	**127542**	WSTU-SCEZ-104S-PCR	@	WSTU-SCEZ-104S-P
	30mm	***127576***	*WSTU-SCEZ-30M-PCR*	@	*WSTU-SCEZ-30M-P*
207	1-1/4	**127543**	WSTU-SCEZ-104-PCR	@	WSTU-SCEZ-104-P
	1-5/16	@	WSTU-SCEZ-105-PCR*	@	WSTU-SCEZ-105-P
	1-3/8	@	WSTU-SCEZ-106-PCR*	**073836**	WSTU-SCEZ-106-P
	1-7/16	**127544**	WSTU-SCEZ-107-PCR	@	WSTU-SCEZ-107-P
	35mm	***127577***	*WSTU-SCEZ-35M-PCR*	@	*WSTU-SCEZ-35M-P*

DODGE®



E-Z KLEEN Mounted Bearings

SCEZ NORMAL DUTY POLYMER HOUSED WIDE SLOT TAKE-UP BEARINGS

Series	Shaft Size	Weight Lbs kg	Take-Up Frame No. Ref.	A	B	C	D	E	F Thd Shaft	G
204	1/2	0.86	WS300	1.23	3.81	0.545/0.515	2.10	2.50	5/8	0.56
	5/8	0.76								
	3/4	0.66								
	20mm	*0.31*		*31.2*	*96.8*	*13.84/13.08*	*53.3*	*63.5*	*15.9*	*14.2*
205	7/8	0.92	WS300	1.34	3.97	0.545/0.515	2.20	2.56	5/8	0.56
	15/16	0.82								
	1	0.72								
	25mm	*0.34*		*34.0*	*100.8*	*13.84/13.08*	*55.9*	*65.0*	*15.9*	*14.2*
206	1-1/8	1.11	WS308	1.52	4.49	0.545/0.515	2.29	2.86	3/4	0.56
	1-3/16	1.09								
	1-1/4	1.07								
	30mm	*0.49*		*38.6*	*114.0*	*13.84/13.08*	*58.2*	*72.6*	*19.1*	*14.2*
207	1-1/4	1.58	WS308	1.71	4.99	0.545/0.515	2.25	3.10	3/4	0.56
	1-5/16	1.52								
	1-3/8	1.47								
	1-7/16	1.42								
	35mm	*0.69*		*43.4*	*126.7*	*13.84/13.08*	*57.2*	*78.7*	*19.1*	*14.2*

Series	Shaft Size	H	J	K	L	M	N	R	S	T
204	1/2	0.65	2.10	0.71	1.12	3.015/2.985	3.63	0.50	0.73	1.38
	5/8									
	3/4									
	20mm	*16.5*	*53.3*	*18.0*	*28.4*	*76.58/75.82*	*92.2*	*12.7*	*18.5*	*35.1*
205	7/8	0.65	2.12	0.71	1.32	3.030/3.000	3.63	0.56	0.78	1.38
	15/16									
	1									
	25mm	*16.5*	*53.8*	*18.0*	*33.5*	*76.96/76.20*	*92.2*	*14.2*	*19.8*	*35.1*
206	1-1/8	0.65	2.41	0.81	1.57	3.525/3.495	4.20	0.58	0.94	1.62
	1-3/16									
	1-1/4									
	30mm	*16.5*	*61.2*	*20.6*	*39.9*	*89.54/88.77*	*106.7*	*14.7*	*23.9*	*41.1*
207	1-1/4	0.65	2.41	0.81	1.84	3.540/3.510	4.20	0.67	1.04	1.62
	1-5/16									
	1-3/8									
	1-7/16									
	35mm	*16.5*	*61.2*	*20.6*	*46.7*	*89.93/89.15*	*106.7*	*17.0*	*26.4*	*41.1*

@ Assembled to order * 20 piece minimum

FEATURES/BENEFITS PAGE B2-3	HOW TO ORDER/NOMENCLATURE PAGE B2-8	SELECTION/DIMENSIONS PAGE B2-24	ACCESSORIES PAGE B2-77

SELECTION/DIMENSIONS

DODGE®



E-Z KLEEN Mounted Bearings

DLEZ NORMAL DUTY POLYMER HOUSED WIDE SLOT TAKE-UP BEARINGS

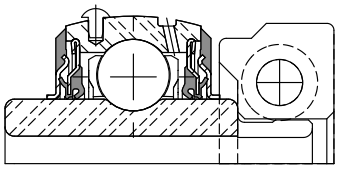

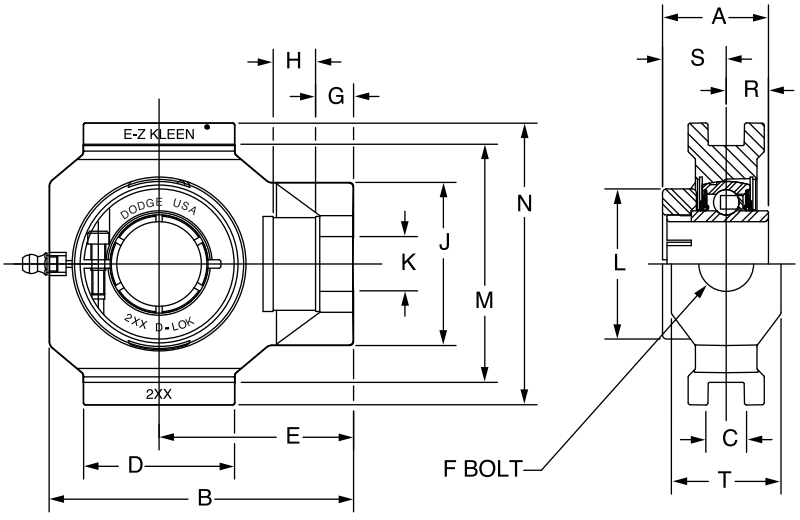

Series	Shaft Size	With Corrosion Resistant Insert		Standard Insert With Flingers		Weight lbs kg	Take-Up Frame No. Ref.	A	B	C	D	E
		Part No.	Description	Part No.	Description							
204	3/4	**127617**	WSTU-DLEZ-012-PCR	@	WSTU-DLEZ-012-P	0.66	WS300	1.28	3.81	0.530	2.10	2.50
	20mm	***127652***	*WSTU-DLEZ-20M-PCR*	@	*WSTU-DLEZ-20M-P*	*0.31*		*32.5*	*96.8*	*13.46*	*53.3*	*63.5*
205	7/8	@	WSTU-DLEZ-014-PCR*	@	WSTU-DLEZ-014-P	0.92	WS300	1.44	3.97	0.530	2.20	2.56
	15/16	@	WSTU-DLEZ-015-PCR*	@	WSTU-DLEZ-015-P	0.82						
	1	**127618**	WSTU-DLEZ-100-PCR	@	WSTU-DLEZ-100-P	0.72						
	25mm	***127653***	*WSTU-DLEZ-25M-PCR*	@	*WSTU-DLEZ-25M-P*	*0.34*		*36.6*	*100.8*	*13.46*	*55.9*	*65.0*
206	1-1/8	@	WSTU-DLEZ-102-PCR*	@	WSTU-DLEZ-102-P	1.11	WS308	1.56	4.49	0.530	2.29	2.86
	1-3/16	**127619**	WSTU-DLEZ-103-PCR	@	WSTU-DLEZ-103-P	1.09						
	1-1/4	**127620**	WSTU-DLEZ-104S-PCR	@	WSTU-DLEZ-104S-P	1.07						
	30mm	***127654***	*WSTU-DLEZ-30M-PCR*	@	*WSTU-DLEZ-30M-P*	*0.49*		*39.6*	*114.0*	*13.46*	*58.2*	*72.6*
207	1-1/4	**127621**	WSTU-DLEZ-104-PCR	@	WSTU-DLEZ-104-P	1.58	WS308	1.75	4.99	0.530	2.25	3.10
	1-3/8	@	WSTU-DLEZ-106-PCR*	@	WSTU-DLEZ-106-P	1.47						
	1-7/16	**127622**	WSTU-DLEZ-107-PCR	@	WSTU-DLEZ-107-P	1.42						
	35mm	***127655***	*WSTU-DLEZ-35M-PCR*	@	*WSTU-DLEZ-35M-P*	*0.69*		*44.5*	*126.7*	*13.46*	*57.2*	*78.7*

@ Assembled to order

Series	Shaft Size	F Thd Shaft	G	H	J	K	L	M	N	R	S	T
204	3/4	5/8	0.56	*0.65*	*2.10*	*0.71*	*1.71*	*3.015/2.985*	*3.63*	*0.50*	*0.78*	*1.38*
	20mm	*15.9*	*14.2*	*16.5*	*53.3*	*18.0*	*43.4*	*76.58/75.82*	*92.2*	*12.7*	*19.8*	*35.1*
205	7/8	5/8	0.56	0.65	2.12	0.71	1.99	3.030/3.000	3.63	0.56	0.88	1.38
	15/16											
	1											
	25mm	*15.9*	*14.2*	*16.5*	*53.8*	*18.0*	*50.5*	*76.96/76.20*	*92.2*	*14.2*	*22.4*	*35.1*
206	1-1/8	3/4	0.56	0.65	2.41	0.81	2.22	3.525/3.495	4.20	0.58	0.98	1.62
	1-3/16											
	1-1/4											
	30mm	*19.1*	*14.2*	*16.5*	*61.2*	*20.6*	*56.4*	*89.54/88.77*	*106.7*	*14.7*	*24.9*	*41.1*
207	1-1/4	3/4	0.56	0.65	2.41	0.81	2.69	3.540/3.510	4.20	0.67	1.08	1.62
	1-3/8											
	1-7/16											
	35mm	*19.1*	*14.2*	*16.5*	*61.2*	*20.6*	*68.3*	*89.93/89.15*	*106.7*	*17.0*	*27.4*	*41.1*

DODGE®

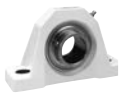

E-Z KLEEN Mounted Bearings
PSEZ POLYMER SLEEVE, POLYMER HOUSED PILLOW BLOCKS

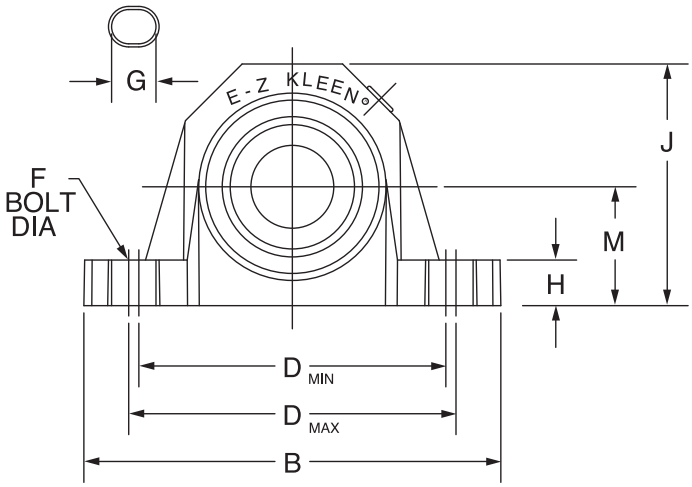

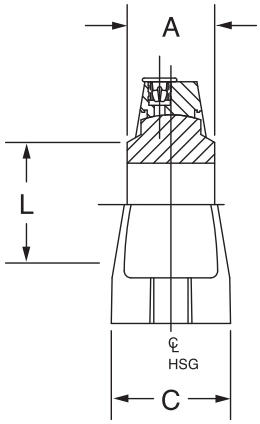

Series	Shaft Size	Part No.	Description
204	3/4	**034700**	P2B-PSEZ-012-P
	20mm	***034748***	*P2B-PSEZ-20M-P*
205	1	**034701**	P2B-PSEZ-100-P
	25mm	***034749***	*P2B-PSEZ-25M-P*
206 (PSU)	1-3/16	**034702**	P2B-PSUEZ-103-P
	1-1/4	**034703**	P2B-PSUEZ-104S-P
	30mm	***034750***	*P2B-PSUEZ-30M-P*
207	1-1/4	**034704**	P2B-PSEZ-104-P
	1-7/16	**034705**	P2B-PSEZ-107-P
	35mm	***034751***	*P2B-PSEZ-35M-P*
208 (PSB)	1-1/2	**034706**	P2B-PSBEZ-108-P
	40mm	***034752***	*P2B-PSBEZ-40M-P*
210	1-15/16	**034709**	P2B-PSEZ-115-P
	50mm	***034754***	*P2B-PSEZ-50M-P*

Series	Shaft Size	Weight lb. kg	A	B	C	D		F Bolt Dia	G	H	J	L	M
						Min	Max						
204	3/4	0.57	1	5-1/32	1-31/64	3-31/64	3-59/64	3/8	19/32	39/64	2-5/8	1-5/16	1-5/16
	20mm	*0.26*	*25.4*	*127.8*	*37.7*	*93.3*	*99.6*	*M10*	*15.1*	*15.5*	*66.7*	*33.3*	*33.3*
205	1	0.57	1-1/16	5-1/2	1-31/64	3-31/32	4-13/64	3/8	19/32	39/64	2-55/64	1-7/16	1-7/16
	25mm	*0.26*	*27.0*	*139.7*	*37.7*	*100.8*	*106.8*	*M10*	*15.1*	*15.5*	*72.6*	*36.5*	*36.5*
206 (PSU)	1-3/16	0.89	1-3/16	6-5/16	1-25/32	4-39/64	4-57/64	1/2	23/32	45/64	3-11/32	1-11/16	1-11/16
	1-1/4	0.88											
	30mm	*0.4*	*30.2*	*160.3*	*45.2*	*116.9*	*124.2*	*M12*	*18.3*	*17.9*	*84.9*	*42.9*	*42.9*
207	1-1/4	1.06	1-5/16	6-35/64	1-7/8	4-13/16	5-1/8	1/2	23/32	23/32	3-57/64	2	1-7/8
	1-7/16	1.01											
	35mm	*0.48*	*33.3*	*166.3*	*47.8*	*122.2*	*130.2*	*M12*	*18.3*	*18.3*	*98.8*	*50.8*	*47.6*
208 (PSB)	1-1/2	1.27	1-1/2	7-13/64	2-7/64	5-7/64	5-41/64	1/2	7/8	49/64	4-11/64	2	1-15/16
	40mm	*0.58*	*38.1*	*183.0*	*53.6*	*129.6*	*143.3*	*M12*	*22.2*	*19.4*	*106.0*	*50.8*	*49.2*
210	1-15/16	1.67	1-5/8	8-1/16	2-23/64	6	6-9/16	5/8	1.00	59/64	4-9/16	2-9/16	2-1/4
	50mm	*0.76*	*41.3*	*204.8*	*59.9*	*152.4*	*166.7*	*M16*	*25.4*	*23.4*	*115.9*	*65.1*	*57.2*

SELECTION/DIMENSIONS

E-Z KLEEN Mounted Bearings

PSEZ POLYMER SLEEVE POLYMER HOUSED TAPPED BASE PILLOW BLOCKS

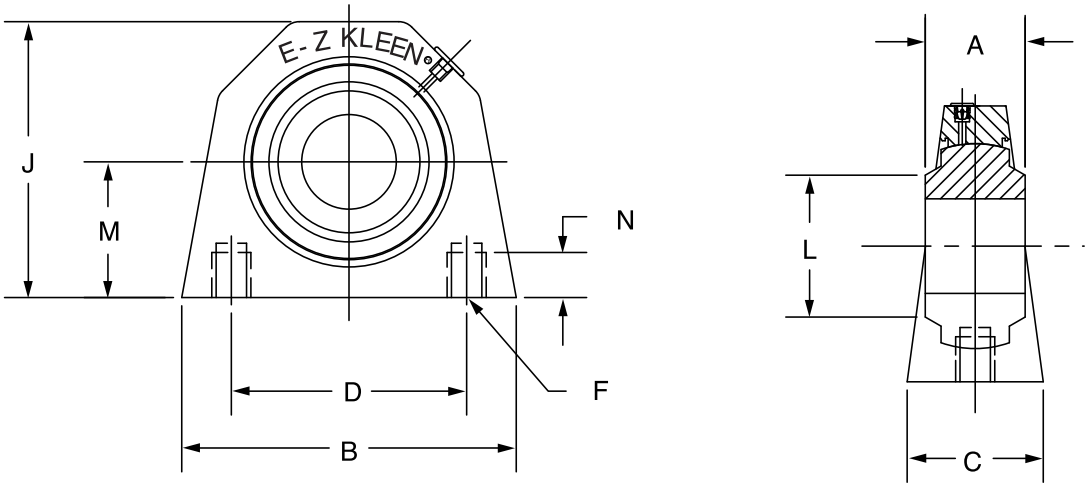

Series	Shaft Size	Part No.	Description
204	3/4	**034710**	TB-PSEZ-012-P
	20mm	***034755***	*TB-PSEZ-20M-P**
205	1	**034711**	TB-PSEZ-100-P
	25mm	***034756***	*TB-PSEZ-25M-P**
206	1-3/16	**034712**	TB-PSEZ-103-P
	1-1/4	**034713**	TB-PSEZ-104S-P
	30mm	***034757***	*TB-PSEZ-30M-P**
207	1-1/4	**034714**	TB-PSEZ-104-P
	1-7/16	**034715**	TB-PSEZ-107-P
	35mm	***034758***	*TB-PSEZ-35M-P**

* Made to Order

Series	Shaft Size	Weight lbs *kg*	A	B	C	D	J	L	M	N Thread Depth	R Bolt Hole Threads
204	3/4	0.53	1	3-1/4	1-31/64	2	2-21/32	1-5/16	1-5/16	13/32	3/8-16
	20mm	*0.24*	*25.4*	*82.6*	*37.7*	*50.8*	*67.6*	*33.3*	*33.3*	*10.2*	*M10x1.5*
205	1	0.46	1-1/16	3-1/4	1-1/2	2	2-57/64	1-7/16	1-7/16	13/32	3/8-16
	25mm	*0.21*	*27.0*	*82.6*	*38.1*	*50.8*	*73.3*	*36.5*	*36.5*	*10.2*	*M10x1.5*
206	1-3/16	0.85	1-3/16	4-3/8	1-37/64	3	3-3/8	1-11/16	1-11/16	29/64	7/16-14
	1-1/4	0.84									
	30mm	*0.39*	*30.2*	*111.1*	*40.1*	*76.2*	*85.9*	*42.9*	*42.9*	*11.4*	*M10x1.5*
207	1-1/4	1.02	1-5/16	4-5/8	1-57/64	3-1/4	3-13/16	2	1-7/8	35/64	1/2-13
	1-7/16	0.97									
	35mm	*0.46*	*33.3*	*117.5*	*48*	*82.6*	*96.8*	*50.8*	*47.6*	*14.0*	*M12x1.75*

* Made to order



E-Z KLEEN Mounted Bearings

PSEZ POLYMER SLEEVE POLYMER HOUSED 2-BOLT FLANGE BEARINGS

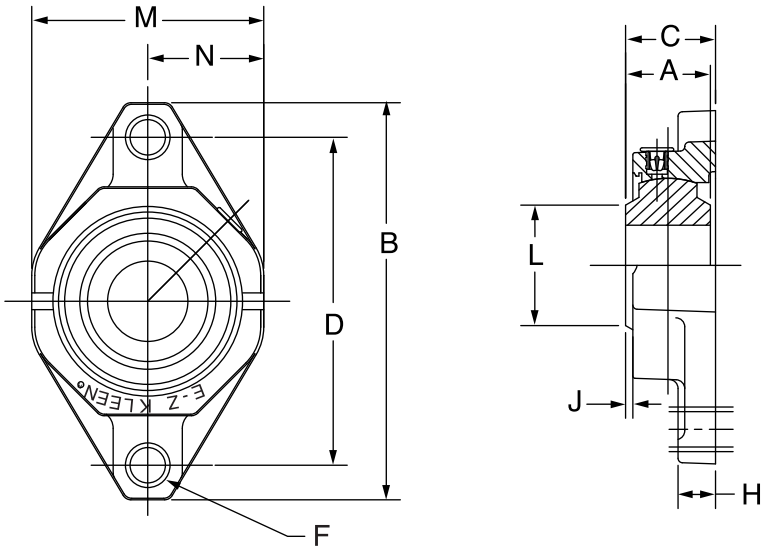

Series	Shaft Size	Part No.	Description
204	3/4	**034726**	F2B-PSEZ-012-P
	20mm	***034766***	*F2B-PSEZ-20M-P*
205	1	**034727**	F2B-PSEZ-100-P
	25mm	***034767***	*F2B-PSEZ-25M-P*
206	1-3/6	**034728**	F2B-PSEZ-103-P
	1-1/4	**034729**	F2B-PSEZ-104S-P
	30mm	***034768***	*F2B-PSEZ-30M-P*
207	1-1/4	**034730**	F2B-PSEZ-104-P
	1-7/16	**034731**	F2B-PSEZ-107-P
	35mm	***034769***	*F2B-PSEZ-35M-P*
208	1-1/2	**034732**	F2B-PSEZ-108-P
	40mm	***034770***	*F2B-PSEZ-40M-P*
210	1-15/16	**034735**	F2B-PSEZ-115-P
	50mm	***034772***	*F28-PSEZ-50M-P*

Series	Shaft Size	Weight lb. *kg*	A	B	C	D	F Bolt Dia	H	J	L	M
204	3/4	0.42	1	4-29/64	1-3/16	3-17/32	3/8	17/32	5/64	1-5/16	2-23/64
	20mm	*0.19*	*25.4*	*113.0*	*30.4*	*90.0*	*M10*	*13.5*	*1.9*	*33.3*	*59.9*
205	1	0.46	1-1/16	4-59/64	1-1/4	3-57/64	3/8	35/64	1/8	1-7/16	2-23/64
	25mm	*0.21*	*27.0*	*125.0*	*31.5*	*99.0*	*M10*	*13.9*	*2.6*	*36.5*	*69.1*
206	1-3/6	0.62	1-3/16	5-19/32	1-11/32	4-19/32	3/8	35/64	7/64	1-11/16	3-13/64
	1-1/4	0.61									
	30mm	*0.28*	*30.2*	*142.1*	*34.1*	*116.5*	*M10*	*13.9*	*2.6*	*42.9*	*81.4*
207	1-1/4	0.78	1-5/16	6-5/16	1-27/64	5-1/8	1/2	5/8	9/64	2	3-45/64
	1-7/16	0.73									
	35mm	*0.36*	*33.3*	*160.3*	*36.2*	*130.0*	*M12*	*15.9*	*3.7*	*50.8*	*94.1*
208	1-1/2	1.01	1-1/2	6-25/32	1-5/8	5-21/32	1/2	43/64	1/4	2	4-1/16
	40mm	*0.46*	*38.1*	*172.0*	*41.4*	*143.5*	*M12*	*17.1*	*4.6*	*50.8*	*103.1*
210	1-15/16	1.14	1-5/8	7-31/64	1-53/64	6-3/16	5/8	49/64	1/4	2-9/16	4-1/2
	50mm	*0.52*	*41.3*	*19.1*	*46.5*	*157.0*	*M16*	*19.4*	*6.2*	*65.1*	*114.3*

SELECTION/DIMENSIONS



E-Z KLEEN Mounted Bearings

PSEZ POLYMER SLEEVE POLYMER HOUSED 3-BOLT FLANGE BRACKET

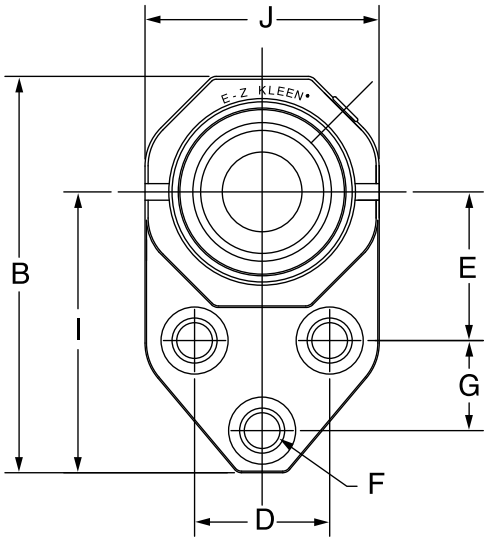

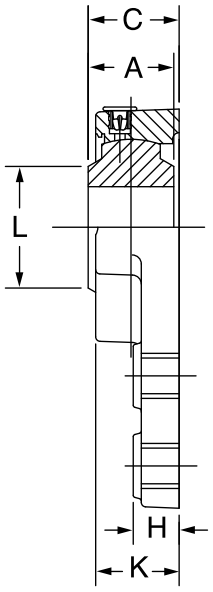

Series	Shaft Size	Part No.	Description
204	3/4	**034736**	FB-PSEZ-012-P
	20mm	***034773***	*FB-PSEZ-20M-P*
205	1	**034737**	FB-PSEZ-100-P
	25mm	***034774***	*FB-PSEZ-25M-P*
206	1-3/16	**034738**	FB-PSEZ-103-P
	1-1/4	**034739**	FB-PSEZ-104S-P
	30mm	***034775***	*FB-PSEZ-30M-P*
207	1-1/4	**034740**	FB-PSEZ-104-P
	1-7/16	**034741**	FB-PSEZ-107-P
	35mm	***034776***	*FB-PSEZ-35M-P*

Series	Shaft Size	Weight lbs *kg*	A	B	C	D	E	F	G	H	I	J	K	L
204	3/4	0.4	1	4-25/64	1-3/16	1-1/2	1-11/16	3/8	7/8	17/32	3-3/16	2-11/32	1-1/8	1-5/16
	20mm	*0.18*	*25.4*	*111.5*	*12.7*	*38.1*	*42.9*	*M10*	*22.2*	*13.5*	*81.1*	*59.4*	*28.4*	*33.3*
205	1	0.57	1-1/16	4-29/32	1-1/4	1-5/8	1-13/16	3/8	1-1/8	35/64	3-17/32	2-45/64	1-9/64	1-7/16
	25mm	*0.23*	*27*	*124.7*	*31.5*	*41.3*	*46.1*	*M10*	*28.6*	*13.9*	*89.8*	*68.8*	*29*	*36.5*
206	1-3/16 1-1/4	0.83 0.82	1-3/16	5-31/64	1-11/32	1-7/8	2-1/16	3/8	1-1/4	39/64	3-57/64	3-13/64	1-1/4	1-11/16
	30mm	*0.38*	*30.2*	*139.2*	*34.1*	*47.6*	*52.4*	*M10*	*31.7*	*15.5*	*98.6*	*81.3*	*31.8*	*42.9*
207	1-1/4 1-7/16	1.25 1.2	1-5/16	6-7/64	1-27/64	2	2-3/8	1/2	1-1/4	5/8	4-15/64	3-45/64	1-9/32	2
	35mm	*0.57*	*33.3*	*155.2*	*36.2*	*50.8*	*60.3*	*M12*	*31.7*	*15.9*	*107.6*	*94.1*	*32.5*	*50.8*

DODGE®



E-Z KLEEN Mounted Bearings

PSEZ POLYMER SLEEVE POLYMER HOUSED 4-BOLT FLANGE BEARINGS

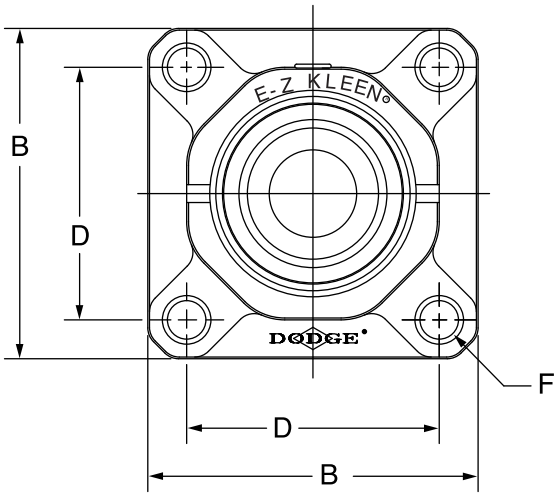

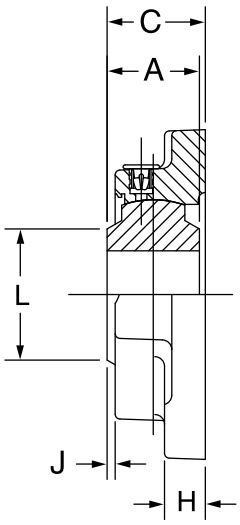

Series	Shaft Size	Part No.	Description
204	3/4	**034716**	F4B-PSEZ-012-P
	20mm	***034759***	*F4B-PSEZ-20M-P*
205	1	**034717**	F4B-PSEZ-100-P
	25mm	***034760***	*F4B-PSEZ-25M-P*
206	1-3/16	**034718**	F4B-PSEZ-103-P
	1-1/4	**034719**	F4B-PSEZ-104S-P
	30mm	***034761***	*F4B-PSEZ-30M-P*
207	1-1/4	**034720**	F4B-PSEZ-104-P
	1-7/16	**034721**	F4B-PSEZ-107-P
	35mm	***034762***	*F4B-PSEZ-35M-P*
208	1-1/2	**034722**	F4B-PSEZ-108-P
	40mm	***034763***	*F4B-PSEZ-40M-P*
210	1-15/16	**034725**	F4B-PSEZ-115-P
	50mm	***034765***	*F4B-PSEZ-50M-P*

Series	Shaft Size	Weight lbs *kg*	A	B	C	D	F Bolt Dia	H	J	L
204	3/4	0.48	1	3-3/8	1-7/32	2-1/2	3/8	17/32	5/64	1-5/16
	20mm	*0.22*	*25.4*	*85.9*	*31.1*	*63.5*	*M10*	*13.5*	*1.9*	*33.3*
205	1	0.55	1-1/16	3-3/4	1-17/64	2-3/4	3/8	35/64	1/8	1-7/16
	25mm	*0.25*	*27*	*95.3*	*32.3*	*70.0*	*M10*	*13.9*	*2.6*	*36.5*
206	1-3/16	0.89	1-3/16	4-1/4	1-3/8	3-1/4	3/8	39/64	7/64	1-11/16
	1-1/4	0.88								
	30mm	*0.40*	*30.2*	*108.0*	*34.9*	*82.5*	*M10*	*15.5*	*2.6*	*42.9*
207	1-1/4	0.97	1-5/16	4-21/32	1-29/64	3-5/8	1/2	5/8	9/64	2.0
	1-7/16	0.92								
	35mm	*0.44*	*33.3*	*118.1*	*37.0*	*92.0*	*M12*	*15.9*	*3.7*	*50.8*
208	1-1/2	1.23	1-1/2	5-1/8	1-21/32	4.0	1/2	43/64	1/4	2.0
	40mm	*0.56*	*38.1*	*130.0*	*42.2*	*101.5*	*M12*	*16.9*	*4.6*	*50.8*
210	1-15/16	1.35	1-5/8	5-5/8	1-55/64	4-3/8	5/8	49/64	1/4	2-9/16
	50mm	*0.61*	*41.3*	*142.7*	*47.3*	*111.0*	*M16*	*19.3*	*6.4*	*65.1*

SELECTION/DIMENSIONS

E-Z KLEEN Mounted Bearings
PSEZ POLYMER SLEEVE BEARING INSERTS

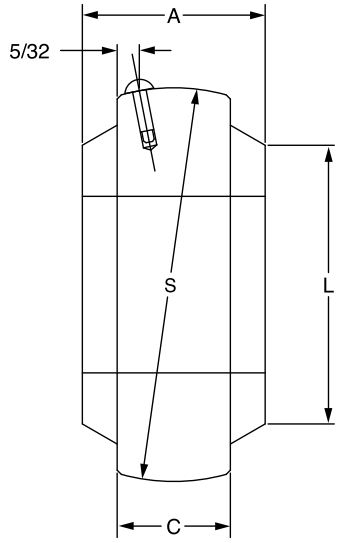

Series	Shaft Size	Part No.	Description
204	3/4	**032867**	INS-PS-012
	20mm	***032868***	*INS-PS-20M*
205	1	**032872**	INS-PS-100
	25mm	***032871***	*INS-PS-25M*
206	1-3/16	**032875**	INS-PS-103
	1-1/4	**032876**	INS-PS-104S
	30mm	***032874***	*INS-PS-30M*
207	1-1/4	**032877**	INS-PS-104
	1-7/16	**032879**	INS-PS-107
	35mm	***032878***	*INS-PS-35M*
208	1-1/2	**032881**	INS-PS-108
	40mm	***032882***	*INS-PS-40M*
210	1-15/16	**032886**	INS-PS-115
	50mm	***032887***	*INS-PS-50M*

Series	Shaft Size	Weight lbs *kg*	A	C	L	S
204	3/4	0.25	1	11/16	1-5/16	1.8465/1.8395
	20mm	*0.14*	*25.4*	*17.5*	*33.3*	*46.9011/46.7233*
205	1	0.25	1-1/16	11/16	1-7/16	2.0435/2.0365
	25mm	*0.15*	*27*	*17.5*	*36.5*	*51.9049/51.7271*
206	1-3/16	0.36	1-3/16	13/16	1-11/16	2.437/2.428
	1-1/4	0.35				
	30mm	*0.16*	*30.2*	*20.6*	*42.9*	*61.8988/61.6712*
207	1-1/4	0.40	1-5/16	13/16	2	2.829/2.820
	1-7/16	0.35				
	35mm	*0.18*	*33.3*	*20.6*	*50.8*	*71.8566/71.6280*
208	1-1/2	0.46	1-1/2	7/8	2	3.144/3.135
	40mm	*0.21*	*38.1*	*22.2*	*50.8*	*79.8576/79.6790*
210	1-15/16	0.50	1-5/8	15/16	2-9/16	3.5375/3.5275
	50mm	*0.23*	*41.3*	*23.8*	*65.1*	*89.8525/89.5985*

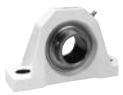

E-Z KLEEN/ULTRA KLEEN Mounted Bearings

Polymer and Stainless Steel Housed End Closures

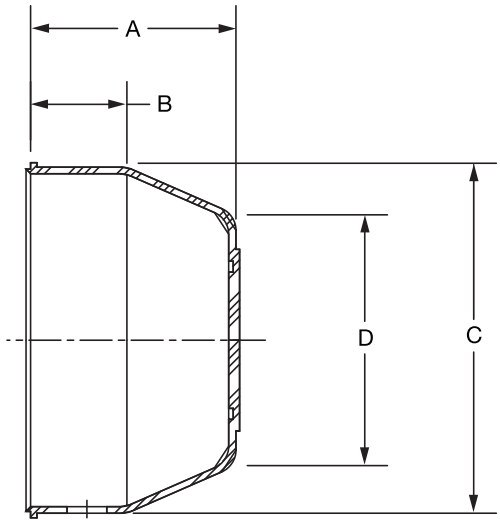

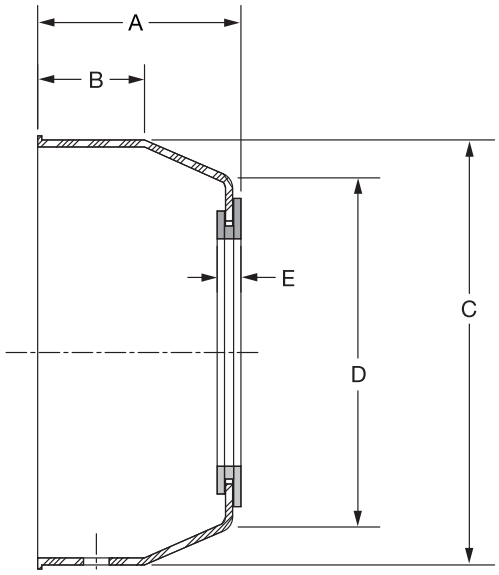

Series	For Shaft Size	Closed End Closure Part Number	Description	A	B	C	D	Open End Closure Part Number	Description	A	B	C	D	E
204	3/4	**128960**	ECC-EZ-204	1-1/8	17/32	1-29/32	1-3/8	**128974**	ECO-EZ-012	1-3/16	17/32	1-29/32	1-3/8	3/16
	20mm			*28.7*	*13.5*	*48.4*	*35.1*	***128991***	*ECO-EZ-20M*	*30.2*	*13.5*	*48.4*	*35.1*	*4.9*
205	1	**128961**	ECC-EZ-205	3/16	17/32	2-11/64	1-39/64	**128975**	ECO-EZ-100	1-1/4	17/32	2-11/64	1-39/64	3/16
	25mm			*30.2*	*13.5*	*55.1*	*40.9*	***128992***	*ECO-EZ-25M*	*31.8*	*13.5*	*55.1*	*40.9*	*4.9*
206	1-3/16 1-1/4	**128962**	ECC-EZ-206	1-21/64	9/16	2-1/2	31/32	**128976** **128989**	ECO-EZ-103 ECO-EZ-104S	1-25/64	9/16	2-1/2	31/32	3/16
	30mm			*33.8*	*14.2*	*63.5*	*50.0*	***128993***	*ECO-EZ-30M*	*35.3*	*14.2*	*63.5*	*50.0*	*4.9*
207	1-1/4 1-7/16	**128963**	ECC-EZ-207	1-15/32	11/16	2-29/32	2-5/16	**128977** **128990**	ECO-EZ-104 ECO-EZ-107	1-17/32	11/16	2-29/32	2-5/16	3/16
	35mm			*37.3*	*17.5*	*73.9*	*58.9*	***128994***	*ECO-EZ-35M*	*38.9*	*17.5*	*73.9*	*58.9*	*4.9*
208	1-1/2	**128964**	ECC-EZ-208	1-35/64	11/16	3-5/16	2-49/64	**128978**	ECO-EZ-108	1-19/32	11/16	3-5/16	2-49/64	13/64
	40mm			*39.1*	*17.5*	*84.1*	*70.1*	***128996***	*ECO-EZ-40M*	*40.6*	*17.5*	*84.1*	*70.1*	*5.1*
209	1-11/16	**128965**	ECC-EZ-209	1-19/32	23/32	3-1/2	2-7/8	**@**	ECO-EZ-111	1-21/32	23/32	3-1/2	2-7/8	13/64
	45mm			*40.4*	*18.3*	*88.9*	*72.9*	***@***	*ECO-EZ-45M*	*41.9*	*18.3*	*88.9*	*72.9*	*5.1*
210	1-15/16 2	**128966**	ECC-EZ-210	1-21/32	29/32	3-5/8	3	**128980**	ECO-EZ-115	1-23/32	29/32	3-5/8	3	13/64
	50mm			*42.2*	*23.1*	*91.4*	*76.2*	***128997***	*ECO-EZ-50M*	*43.7*	*23.1*	*91.4*	*76.2*	*5.1*

@ Assembled to order

FEATURES/BENEFITS PAGE B2-3 | HOW TO ORDER/NOMENCLATURE PAGE B2-8 | EASY SELECTION PAGE B2-12 | SELECTION/DIMENSIONS PAGE 2-24

NOTES



CONTENTS

Extreme Duty Setscrew Ball Bearings

Features / Benefits B3-2
Easy Selection B3-3
Selection B3-5
Selection/Dimensions
- Pillow Blocks B3-8
- Tapped Base Pillow Block B3-17
- 2 Bolt Flange Bearings B3-18
- 4 Bolt Flange Bearings B3-20
- Piloted Flange Bearings B3-23
- Narrow Slot Take-Up Bearings B3-25
- Wide Slot Take-Up Bearings B3-30
- Inserts B3-38

Accessories B3-41
Part Number Index INDEX-1
Key Word Index INDEX-69

FEATURES/BENEFITS

Extreme Duty Setscrew Ball Bearings

The DODGE SC/SCMED Extreme Duty ball bearing offers extended life in the toughest industrial applications. Incorporating patented DODGE-only features such as the QuadGuard sealing system and the Maxlife ball cage, the DODGE SCED/SCMED bearing outperforms the competition in demanding environments where increasing equipment uptime is critical to success. Extreme conditions require highly-engineered products that will last. The DODGE Extreme Duty ball bearing is up to the challenge.

Insert: The Dodge Extreme Duty ball bearing incorporates 65° degree setscrews that provide maximum locking force without compromising the strength of the inner ring. Additional shaft attachment methods are available upon request. The design also includes an anti-rotation pin that prevents the insert from rotating in the housing under load which causes premature failure.

Sealing: The SCED uses the patented QuadGuard sealing system that offers superior protection in tough environments where there is significant risk of contamination. Industries such as agriculture, aggregate, cement, paper, wood products and metals require a sealing system that will extend the life of the bearing in harsh conditions. There are two major components to the QuadGuard design. The first is a unique triple-lip seal design that maximizes sealing without sacrificing the speed rating compared to a single lip design. The Dodge patented triple-lip design uses a mechanically retained seal where there are two contact points on the inner ring and one that rides against the flinger surface. Three points of contact maximize the ability of the bearing to guard against contamination and retain lubricants. The QuadGuard seal also incorporates the industry's first and only patented rubberized flinger. This flinger uses molded rubber to provide additional protection from contaminants entering the bearing. The baffle design of the rubber on the external surface of the flinger enhances the removal of liquid as it rotates. Grease chambers on the internal surface prevent lubricants from exiting the bearing. This superior design will increase service life in dirty environments thus leading to extended up-time for our customers. When used in conjunction with one another, the triple-lip seal and rubberized flinger create a sealing system that is perfect for demanding environments.

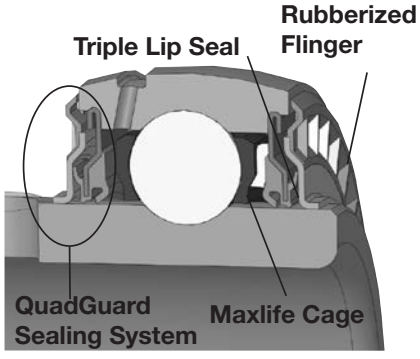

Retainer: The Maxlife Cage is the product of extensive research and development in retainer technology and industry leading engineering. The cage consists of a two-piece design that creates a grease compartment around each of the rolling elements. These compartments allow balls to be constantly in contact with grease, so a good oil film will always exist to prevent wear and minimize friction and heat. The Maxlife cage reduces the relative motion between the components and the grease which results in lower operating temperatures and extended life. The compartmental construction of the cage tends to hold in the grease and prevent it from being washed out in extremely wet or dirty conditions. This feature allows for extended life and the ability for the bearing to be relubricated with less frequency than standard designs.

Lubrication:

Synthetic Grease

- SHC 220 PM synthetic grease standard
- Extends grease life. Less maintenance required.
- Cooler operating temperatures
- Extends life in wet applications

Housings:

- Cast Iron
  - — Pillow blocks
  - — 2 and 4 bolt flange bearings
  - — Tapped-base pillow blocks
  - — Piloted flange
  - — Wide and narrow slot take-up bearings



Maxlife Cage



End-Covers:

Dodge Extreme Duty ball bearings contain a machined groove in the housing to accommodate a snap-on style polymer end-cover as a standard feature. The end-cover provides additional protection from the environment and creates a safer working environment for employees maintaining equipment. The snap-on style end-cover incorporates an additional lip on the mounting surface for a more rigid fit within the housing. The design is more durable than a bolt-on style that uses the grease fitting to secure the cover in place and can be easily knocked off the bearing housings. Closed and open end-covers are available.

NOTE: Instruction manuals and drawings for Dodge bearings are available on www.dodge-pt.com

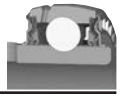

Selection of Extreme Duty Setscrew Ball Bearings

DODGE Extreme Duty mounted ball bearings are primarily designed for radial loading. However, they have the capacity to carry thrust loads and combined radial/thrust loads. The maximum recommended load which can be applied is limited by various components in the system, such as bearing, housing, shaft attachments, speed and life requirements as listed in this catalog and the instruction manual that accompanies each bearing. DODGE Extreme Duty ball bearings have been applied successfully when these limits have been exceeded under controlled operating conditions. Contact DODGE Engineering for applications which exceed these recommendations.

Select a bearing from the Selection Table that has a radial load rating at the operating speed equal to or greater than the calculated Equivalent Radial Load for a desired L_{10} life. This simple method is all that is required for the majority of general applications and provides for occasional average shock loads.

L_{10} Hours Life-the life which may be expected for at least 90% of a given group of bearings operating under identical conditions.

Heavy Service-For heavy shock loads, frequent shock loads or severe vibrations, add up to 50% (according to severity of conditions) to the Equivalent Radial Load to obtain a Modified Equivalent Radial Load. Consult Application Engineering for additional selection assistance.

A maximum thrust load value of C/10 is recommended as a guide for general applications and will give adequate L_{10} life. If the thrust load exceeds this limit, it is advisable to use auxiliary thrust carrying devices, such as a shaft shoulder, snap ring, or a thrust collar. Where substantial radial load pulls the housing away from the mounting base, both the hold-down bolts and housing must be of adequate strength. Auxiliary load carrying devices, such as shear bars, are advisable for side or end-loading of pillow blocks and radial loads for flange units.

To determine the L_{10} hours life for loads and RPMs not listed use the following equation:

$$L_{10} = \left(\frac{C}{P}\right)^{3} \times \left(\frac{16{,}667}{n}\right)$$

Where:

L_{10}= Life, hours

C = Dynamic Capacity, lbs. or N

P = Equivalent Radial Load, lbs. or N

n = Revolutions per minute

When the load on a ball bearing is solely a radial load with no thrust (axial) load, the Equivalent Radial Load (P) is equal to the actual radial load. However, when a thrust (axial) load is applied, the radial and thrust loads applied must be converted into an Equivalent Radial Load. Use X (radial factor) and Y (thrust factor) from Table 1 to convert the actual applied thrust and radial loads to an Equivalent Radial Load which has the same effect on the life of a bearing as a radial load of this magnitude.

$$P = XF_R + YF_A$$

Where:

P = Equivalent Radial Load, lbs.
F_R= Radial load, lbs.
F_A= Thrust load, lbs.
e = Thrust load to radial load factor (Table 1)
X = Radial load factor (Table 1)
Y = Thrust Factor (Table 1)
C_0= Basic static capacity (Selection Table)

To find X and Y, first calculate F_A/C_0 to determine e. Calculate F_A/F_R and compare to e to determine the X and Y factors to use from Table 1.

Shaft Tolerances		
Normal Shaft Size	**Commercial Shaft Tolerance (Inches)**	**Recommended Shaft Tolerances Setscrew Ball Bearing (Inches)**
Up to 1-1/2"	+0.000 -0.002	+0.0000 -0.0005
Over 1-1/2" to 2-1/2"	+0.000 -0.003	+0.0000 -0.0010
Over 2-1/2" to 4"	+0.000 -0.004	+0.0000 -0.0010

NOTE: Bearing analysis program "BEST" is available on www.ptwizard.com

FEATURES/BENEFITS PAGE B3-2	SELECTION PAGE B3-5	SELECTION/DIMENSIONS PAGE B3-8	ACCESSORIES PAGE B3-41

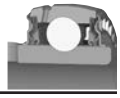

Selection of Extreme Duty Setscrew Ball Bearings

Table 1

F_A/C_0	e	Radial/Thrust Factors			
		If F_A/F_R is equal to or less than e		If F_A/F_R is greater than e	
		$F_A/F_R \leq e$		$F_A/F_R > e$	
		X	Y	X	Y
0.014	0.19	1	0	0.56	2.30
0.021	0.21	1	0	0.56	2.15
0.028	0.22	1	0	0.56	1.99
0.042	0.24	1	0	0.56	1.85
0.056	0.26	1	0	0.56	1.71
0.070	0.27	1	0	0.56	1.63
0.084	0.28	1	0	0.56	1.55
0.110	0.30	1	0	0.56	1.45
0.170	0.34	1	0	0.56	1.31
0.280	0.38	1	0	0.56	1.15
0.420	0.42	1	0	0.56	1.04
0.560	0.44	1	0	0.56	1.00

Substitute all known values into the Equivalent Radial Load equation. The Equivalent Radial Load (P) thus determined can be used in the L_{10} life formula or compared to the allowable Equivalent Radial Load rating desired in the expanded rating chart to select a bearing (Selection Table).

If calculated value of P is less than F_R, use $P=F_R$.

Lubrication- DODGE Ball Bearings are lubricated at the factory and are ready to run. The bearings are initially lubricated with a lithium complex grease and should be relubricated with the same or some equivalent. For high speeds, high loads, extreme temperatures and other abnormal operating conditions, special greases may be required. Contact DODGE Application Engineering for recommendations on these types of applications.

Misalignment - DODGE Ball Bearings are designed to allow a maximum of ±2° static misalignment. These bearings are not suitable for dynamic misalignment. To ensure good alignment, mounting surfaces must be checked for flatness and must lie in the same plane. When tightening base bolts, each bolt should be alternately tightening in incremental torque values until full torque is achieved to prevent the angular shifting of the pillow block that occurs when one bolt is tightened to its full torque. Shimming may be required to minimize misalignment.

NOTE: Bearing analysis program "BEST" is available on www.ptwizard.com

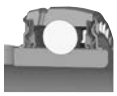

Setscrew Ball Bearings

Recommended Torque													
Setscrews					D-LOK			Mounting Bolts					
		◆ Recommended Torque						Metal Housings		EZ-KLEEN Housed Bearings			
Setscrew Size	Key Hex Across Flats	Standard Ball Bearing Insert		Corrosion Resistant Stainless Steel	Cap Screw Size	Recom. Torque	EZ-KLEEN Recom. Torque	Bolt Size	Recom. Dry Torque (Grade 2)	2-Bolt PB, 2 & 4 Bolt Fig. and Flg. Brackets		Tapped Base PB	
		Min	Max							Bolt Size	Torque ①	Bolt Size	Torque ②
(in.)	(in.)	(in-lbs.)	(in.-lbs.)	(in.-lbs.)	(in.)	(in.-lbs.)	(in.-lbs.)	(in.)	(in.-lbs.)	(in.)	(in.-lbs.)	(in.)	(in.-lbs.)
#10	3/32	28	33	25	#8-32	58	46	3/8-16	240	3/8-16	225	3/8-16	175
1/4	1/8	66	80	60	#10-32	90	72	7/16-14	384	7/16-14	350	7/16-14	350
5/16	5/32	126	156	117	1/4-28	180	144	1/2-13	600	1/2-13	500	1/2-13	400
3/8	3/16	228	275	206	5/16-24	400	320	5/8-11	1200	9/16-12	650		
7/16	7/32	342	428	321	3/8-24	750	600	3/4-10	1950	5/8-11	1000		
								7/8-9	2890				
(mm)	(mm)	(N-m)	(N-m)	(N-m)	(mm)	(N-m)	(N-m)	(mm)	(N-m)	(mm)	(N-m)	①Torque for Austenitic (18-8) Stainless ②Max. torque values published. Do not exceed	
M5	2.5	3.2	3.7	2.8	M4	585	4.68	M10	29	M8	15		
M6	3	6.2	7.7	5.8	M5	10.75	8.6	M12	50	M10	25		
M8	4	14.2	17.8	13.4	M6	20.5	16.4	M16	124	M12	50		
M10	5	26	31	23	M8	45	36	M20	238	M14	75		
M12	6	46	57	43				M22	322	M18	125		

Lubrication

High Speed Operation - In the higher speed ranges, too much grease will cause over-heating. The amount of grease that the bearing will take for a particular high speed application can only be determined by experience. If excess grease in the bearing causes overheating, it will be necessary to remove grease fitting to permit excess grease to escape. The bearing has been greased at the factory and is ready to run. When establishing a relubrication schedule, note that a small amount of grease at frequent intervals is preferable to a large amount at infrequent intervals.

◆ **NOTE:** Dodge does not recommend the use of oils or locking agents on setscrew threads. However, if utilized, the minimum installation torque values should be followed.

Lubrication Guide

Use a No. 2 Lithium complex base grease or equivalent*

Hours Run per Day	Suggested Lubrication Period in Weeks							
	1 to 250 RPM	251 to 500 RPM	501 to 750 RPM	751 to 1000 RPM	1001 to 1500 RPM	1501 to 2000 RPM	2001 to 2500 RPM	2501 to 3000 RPM
8	12	12	10	7	5	4	3	2
16	12	7	5	4	2	2	1	1
24	10	5	3	2	1	1	1	1

* For EZ-KLEEN series bearings, use an aluminum complex base grease.

Lubrication recommendations are intended for standard products applied in general operating conditions. For modified products, high temperature applications, and other anomalous applications contact product engineering at 864-284-5700.

NOTE: Bearing analysis program "BEST" is available on www.ptwizard.com

SELECTION

DODGE®

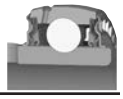

Extreme Duty SCED/SCMED

Ring Size	Shaft Size SCED	Shaft Size SCMED	Dynamic Capacity C_r lbs.	Static Capacity C_0 lbs.	L_{10} Life - Hours	Allowable Equivalent Radial Load Rating (lbs.) at Various RPM* 50	150	250	500	750	1000	1250	1500	1600	1750	2000	2250
204	1/2 5/8 3/4 13/16 20mm		2899	1482	**20000**	741	513	433	344	300	273	253	238	233	226	217	208
					30000	647	449	378	300	262	238	221	208	204	198	189	182
					40000	588	408	344	273	238	217	201	189	185	180	172	165
					60000	513	356	300	238	208	189	176	165	162	157	150	144
					100000	433	300	253	201	176	160	148	139	136	132	127	122
205	7/8 15/16 1 25mm		3146	1769	**20000**	804	557	470	373	326	296	275	259	253	246	235	226
					30000	702	487	411	326	285	259	240	226	221	215	205	17
					40000	638	442	373	296	259	235	218	205	201	195	187	179
					60000	557	386	326	259	226	205	191	179	176	170	163	157
					100000	470	326	275	218	191	173	161	151	148	144	137	132
206	1-1/16 1-1/8 1-3/16 1-1/4 30mm	1 25mm	4368	2538	**20000**	1116	774	652	518	452	411	382	359	351	341	326	314
					30000	975	676	570	452	395	359	333	314	307	298	285	274
					40000	886	614	518	411	359	326	303	285	279	271	259	249
					60000	774	536	452	359	314	285	265	249	244	237	226	217
					100000	652	452	382	303	265	240	223	210	206	199	191	183
207	1-1/4 1-5/16 1-3/8 1-7/16 35mm	1-3/16 1-1/4 30mm	5759	3461	**20000**	1471	1020	860	683	596	542	503	473	463	450	430	414
					30000	1285	891	752	596	521	473	439	414	405	393	376	361
					40000	1168	810	683	542	473	430	399	376	368	357	341	328
					60000	1020	707	596	473	414	376	349	328	321	312	298	287
					100000	860	596	503	399	349	317	294	277	271	263	252	242
208	1-1/2 1-5/8 40mm	1-7/16 1-1/2✤ 35mm	7332	4475	**20000**	1873	1299	1095	869	759	690	641	603	590	573	548	527
					30000	1636	1134	957	759	663	603	560	527	515	500	478	460
					40000	1487	1031	869	690	603	548	508	478	468	454	435	418
					60000	1299	900	759	603	527	478	444	418	409	397	380	365
					100000	1095	759	641	508	444	403	375	352	345	335	320	308
209	1-5/8 1-11/16 1-3/4 45mm	1-1/2 40mm	7891	4906	**20000**	2016	1398	1179	936	817	743	689	649	635	616	589	567
					30000	1761	1221	1030	817	714	649	602	567	555	538	515	495
					40000	1600	1109	936	743	649	589	547	515	504	489	468	450
					60000	1398	969	817	649	567	515	478	450	440	427	409	393
					100000	1179	817	689	547	478	434	403	379	371	360	345	331
210	1-15/16 2 50mm	1-11/16 1-3/4 45mm	7891	5213	**20000**	2016	1398	1179	936	817	743	689	649	635	616	589	567
					30000	1761	1221	1030	817	714	649	602	567	555	538	515	495
					40000	1600	1109	936	743	649	589	547	515	504	489	468	450
					60000	1398	969	817	649	567	515	478	450	440	427	409	393
					100000	1179	817	689	547	478	434	403	379	371	360	345	331
211	2 2-3/16 2-1/4 55mm	1-15/16 2 50mm	9755	6588	**20000**	2492	1728	1457	1157	1010	918	852	802	785	762	729	701
					30000	2177	1509	1273	1010	883	802	744	701	686	665	636	612
					40000	1978	1371	1157	918	802	729	676	636	623	605	578	556
					60000	1728	1198	1010	802	701	636	591	556	544	528	505	486
					100000	1457	1010	852	676	591	537	498	469	459	445	426	410
212	2-1/4 2-7/16 60mm	2-3/16 2-1/4 55mm	11791	8100	**20000**	3012	2088	1761	1398	1221	1110	1030	969	949	921	881	847
					30000	2631	1824	1539	1221	1067	969	900	847	829	804	769	740
					40000	2391	1657	1398	1110	969	881	818	769	753	731	699	672
					60000	2088	1448	1221	969	847	769	714	672	658	638	611	587
					100000	1761	1221	1030	818	714	649	602	567	555	538	515	495
214	2-11/16 70mm	2-7/16 2-1/2 65mm	13995	9838	**20000**	3575	2479	2091	1659	1450	1317	1223	1150	1126	1093	1045	1005
					30000	3123	2165	1826	1450	1266	1150	1068	1005	984	955	913	878
					40000	2837	1967	1659	1317	1150	1045	970	913	894	867	830	798
					60000	2479	1719	1450	1150	1005	913	848	798	781	758	725	697
					100000	2091	1450	1223	970	848	770	715	673	658	639	611	588
215	2-15/16 75mm	2-11/16 70mm	14872	11108	**20000**	3799	2634	2222	1763	1540	1400	1299	1223	1197	1161	1111	1068
					30000	3319	2301	1941	1540	1346	1223	1135	1068	1045	1015	970	933
					40000	3015	2091	1763	1400	1223	1111	1031	970	950	922	882	848
					60000	2634	1826	1540	1223	1068	970	901	848	830	805	770	741
					100000	2222	1540	1299	1031	901	818	760	715	700	679	650	625
216		2-15/16 3 75mm	17407	13102	**20000**	4446	3083	2600	2064	1803	1638	1521	1431	1401	1359	1300	
					30000	3884	2693	2272	1803	1575	1431	1328	1250	1223	1187	1136	
					40000	3529	2447	2064	1638	1431	1300	1207	1136	1112	1079	1032	
					60000	3083	2138	1803	1431	1250	1136	1054	992	971	942	901	
					100000	2600	1803	1521	1207	1054	958	889	837	819	795	760	
218		3-7/16 3-1/2 85mm	21451	16641	**20000**	5479	3799	3204	2543	2222	2019	1874	1763	1726			
					30000	4787	3319	2799	2222	1941	1763	1637	1541	1508			
					40000	4349	3015	2543	2019	1763	1602	1487	1400	1370			
					60000	3799	2634	2222	1763	1541	1400	1299	1223	1197			
					100000	3204	2222	1874	1487	1299	1181	1096	1031	1009			

* Slight interference fit required when operating on the right of the heavy line or in the shaded area.

✤ Piloted flange only

NOTE: Bearing analysis program "BEST" is available on www.ptwizard.com

FEATURES/BENEFITS PAGE B3-2	EASY SELECTION PAGE B3-3	SELECTION/DIMENSIONS PAGE B3-8	ACCESSORIES PAGE B3-41

DODGE®

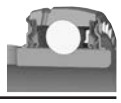

Extreme Duty SCED/SCMED

Ring Size	Shaft Size SCED	Shaft Size SCMED	Dynamic Capacity C, lbs.	Static Capacity C_0, lbs.	L_{10} Life - Hours	Allowable Equivalent Radial Load Rating (lbs.) at Various RPM* 2500	2750	3000	3250	3500	3600	4000	4500	5000	5250	5500	6000
204	1/2 5/8 3/4 13/16 20mm		2899	1482	**20000**	201	195	189	184	180	178	172	165	160	157	155	150
					30000	176	170	165	161	157	155	150	144	139	137	135	131
					40000	160	155	150	146	143	141	136	131	127	125	123	119
					60000	139	135	131	128	125	123	119	115	111	109	107	104
					100000	118	114	111	108	105	104	101	97	93	92	90	88
205	7/8 15/16 1 25mm		3146	1769	**20000**	218	211	205	200	195	193	187	179	173	170	168	163
					30000	191	185	179	175	170	169	163	157	151	149	147	142
					40000	173	168	163	159	155	153	148	142	137	135	133	129
					60000	151	147	142	139	135	134	129	124	120	118	116	113
					100000	128	124	120	117	114	113	109	105	101	100	98	95
206	1-1/16 1-1/8 1-3/16 1-1/4 30mm	1 25mm	4368	2538	**20000**	303	293	285	278	271	268	259	249	240	237		
					30000	265	256	249	242	237	234	226	217	210	207		
					40000	240	233	226	220	215	213	206	198	191	188		
					60000	210	203	198	192	188	186	180	173	167	164		
					100000	177	172	167	162	158	157	151	146	141	138		
207	1-1/4 1-5/16 1-3/8 1-7/16 35mm	1-3/16 1-1/4 30mm	5759	3461	**20000**	399	387	376	366	357	354	341	328				
					30000	349	338	328	320	312	309	298	287				
					40000	317	307	298	290	283	281	271	261				
					60000	277	268	261	254	247	245	237	228				
					100000	234	226	220	214	209	207	200	192				
208	1-1/2 1-5/8 40mm	1-7/16 1-1/2✤ 35mm	7332	4475	**20000**	508	492	478	466	454	450	435					
					30000	444	430	418	407	397	393	380					
					40000	403	391	380	370	361	357	345					
					60000	352	341	332	323	315	312	301					
					100000	297	288	280	272	266	263	254					
209	1-5/8 1-11/16 1-3/4 45mm	1-1/2 40mm	7891	4906	**20000**	547	530	515	501	489	485						
					30000	478	463	450	438	427	423						
					40000	434	421	409	398	388	385						
					60000	379	367	357	348	339	336						
					100000	320	310	301	293	286	283						
210	1-15/16 2 50mm	1-11/16 1-3/4 45mm	7891	5213	**20000**	547	530	515	501	489	485						
					30000	478	463	450	438	427	423						
					40000	434	421	409	398	388	385						
					60000	379	367	357	348	339	336						
					100000	320	310	301	293	286	283						
211	2 2-3/16 2-1/4 55mm	1-15/16 2 50mm	9755	6588	**20000**	676	655	636	620								
					30000	591	572	556	541								
					40000	537	520	505	492								
					60000	469	454	441	430								
					100000	396	383	372	362								
212	2-1/4 2-7/16 60mm	2-3/16 2-1/4 55mm	11791	8100	**20000**	818	792										
					30000	714	692										
					40000	649	629										
					60000	567	549										
					100000	478	463										
214	2-11/16 70mm	2-7/16 2-1/2 65mm	13995	9838	**20000**	970											
					30000	848											
					40000	770											
					60000	673											
					100000	567											
215	2-15/16 75mm	2-11/16 70mm	14872	11108	**20000**	1031											
					30000	901											
					40000	818											
					60000	715											
					100000	603											
216		2-15/16 3 75mm	17407	13102	**20000**												
					30000												
					40000												
					60000												
					100000												
218		3-7/16 3-1/2 85mm	21451	16641	**20000**												
					30000												
					40000												
					60000												
					100000												

* Slight interference fit required when operating on the right of the heavy line or in the shaded area.

✤ Piloted flange only

NOTE: Bearing analysis program "BEST" is available on www.ptwizard.com

FEATURES/BENEFITS PAGE B3-2	EASY SELECTION PAGE B3-3	SELECTION/DIMENSIONS PAGE B3-8	ACCESSORIES PAGE B3-41

SELECTION/DIMENSIONS

EXTREME DUTY SETSCREW BALL BEARINGS
SCED AND SCUED NORMAL DUTY PILLOW BLOCKS

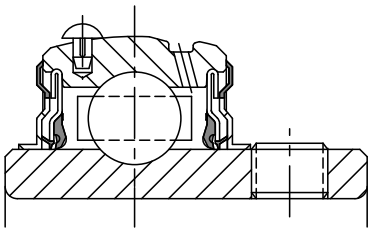

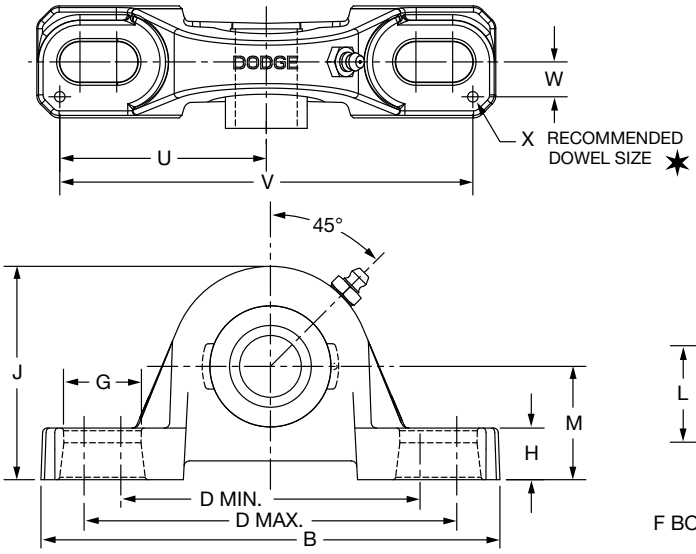

Series	Shaft Size	Standard Part No.	Description
204	1/2	@	P2B-SCED-008L
	5/8	**075546**	P2B-SCED-010L
	3/4	**076000**	P2B-SCED-012
	20mm	***076220***	*P2B-SCED-20M*
205	7/8	@	P2B-SCED-014
	15/16	@	P2B-SCED-015
	1	**076001**	P2B-SCED-100
	25mm	***076221***	*P2B-SCED-25M*
206	1-1/16	@	P2B-SCED-101
	1-1/8	**076002**	P2B-SCED-102
	1-3/16	**076003**	P2B-SCED-103
	1-1/4	**076004**	P2B-SCED-104S
	30mm	***076222***	*P2B-SCED-30M*
206 (SCU)	1-1/16	@	P2B-SCUED-101
	1-1/8	@	P2B-SCUED-102
	1-3/16	@	P2B-SCUED-103
	1-1/4	@	P2B-SCUED-104S
	30mm	@	*P2B-SCUED-30M*
207	1-1/4	**076005**	P2B-SCED-104
	1-5/16	@	P2B-SCED-105
	1-3/8	**076006**	P2B-SCED-106
	1-7/16	**076007**	P2B-SCED-107
	35mm	***076223***	*P2B-SCED-35M*

@ Assembled to order.

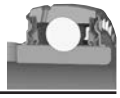

EXTREME DUTY SETSCREW BALL BEARINGS
SCED AND SCUED NORMAL DUTY PILLOW BLOCKS

Series	Shaft Size	Weight lbs. *kgs*	A	B	C	D Min.	D Max.	F Bolt Dia.	G	H
204	1/2	1.6	1.23	5.25	1.34	3.38	4.19	3/8	0.85	0.53
	5/8	1.5								
	3/4	1.4								
	20mm	*0.7*	*31.2*	*133.4*	*34.0*	*85.9*	*106.4*	*M10*	*21.6*	*13.5*
205	7/8	1.8	1.34	5.50	1.40	3.69	4.50	3/8	0.85	0.58
	15/16	1.7								
	1	1.6								
	25mm	*0.7*	*34.0*	*139.7*	*35.6*	*93.7*	*114.3*	*M10*	*21.6*	*14.7*
206	1-1/16	2.8	1.52	6.25	1.75	4.25	5.00	1/2	0.94	0.68
	1-1/8	2.7								
	1-3/16	2.6								
	1-1/4	2.5								
	30mm	*1.1*	*38.6*	*158.8*	*44.5*	*108.0*	*127.0*	*M12*	*23.9*	*17.3*
206 (SCU)	1-1/16	2.9	1.52	6.25	1.75	4.25	5.00	1/2	0.94	0.75
	1-1/8	2.8								
	1-3/16	2.7								
	1-1/4	2.6								
	30mm	*1.1*	*38.6*	*158.8*	*44.5*	*108.0*	*127.0*	*M12*	*23.9*	*19.1*
207	1-1/4	4.5	1.71	6.50	1.75	4.68	5.44	1/2	0.94	0.71
	1-5/16	4.4								
	1-3/8	4.3								
	1-7/16	4.2								
	35mm	*1.5*	*43.4*	*165.1*	*44.5*	*118.9*	*138.2*	*M12*	*23.9*	*18.0*

Series	Shaft Size	J	L	M	R	S	U	V	W	X
204	1/2	2.56	1.12	1.31	0.50	0.73	2.25	4.50	0.50	0.12
	5/8									
	3/4									
	20mm	*65.0*	*28.4*	*33.3*	*12.7*	*18.5*	*57.2*	*114.3*	*12.7*	*3.0*
205	7/8	2.77	1.32	1.44	0.56	0.78	2.50	5.00	0.50	0.12
	15/16									
	1									
	25mm	*70.4*	*33.5*	*36.5*	*14.2*	*19.8*	*63.5*	*127.0*	*12.7*	*3.0*
206	1-1/16	3.25	1.57	1.63	0.58	0.94	2.88	5.76	0.56	0.12
	1-1/8									
	1-3/16									
	1-1/4									
	30mm	*82.6*	*39.9*	*41.3*	*14.7*	*23.9*	*73.2*	*146.3*	*14.2*	*3.0*
206 (SCU)	1-1/16	3.31	1.57	1.69	0.58	0.94	2.88	5.76	0.56	0.12
	1-1/8									
	1-3/16									
	1-1/4									
	30mm	*84.1*	*39.9*	*42.9*	*14.7*	*23.9*	*73.2*	*146.3*	*14.2*	*3.0*
207	1-1/4	3.75	1.84	1.88	0.67	1.04	2.91	5.82	0.56	0.12
	1-5/16									
	1-3/8									
	1-7/16									
	35mm	*95.3*	*46.7*	*47.6*	*17.0*	*26.4*	*73.9*	*147.8*	*14.2*	*3.0*

FEATURES/BENEFITS PAGE B3-2 | EASY SELECTION PAGE B3-3 | SELECTION PAGE B3-5 | ACCESSORIES PAGE B3-41

SELECTION/DIMENSIONS

Extreme Duty Setscrew Ball Bearings
SCED AND SCUED NORMAL DUTY PILLOW BLOCKS

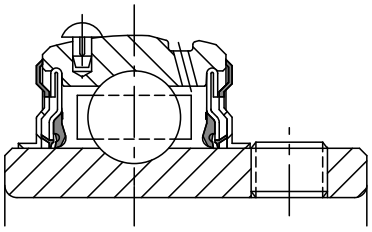

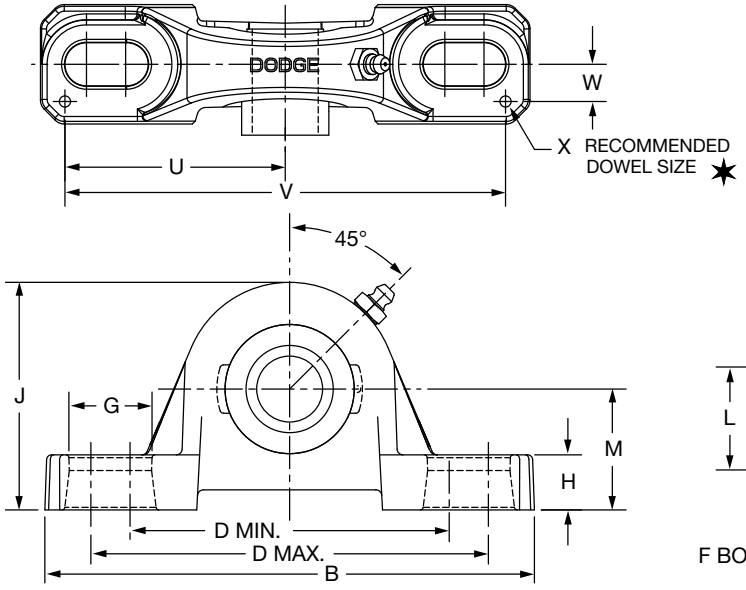

Series	Shaft Size	Standard Part No.	Description
208	1-1/2	**076008**	P2B-SCED-108
	1-5/8	**@**	P2B-SCED-110
	40mm	***076224***	*P2B-SCED-40M*
209	1-5/8	**@**	P2B-SCED-110L
	1-11/16	**076009**	P2B-SCED-111
	1-3/4	**076010**	P2B-SCED-112
	45mm	***076225***	*P2B-SCED-45M*
210	1-15/16	**076011**	P2B-SCED-115
	2	**076012**	P2B-SCED-200
	50mm	***076226***	*P2B-SCED-50M*
211	2	**076132**	P2B-SCMED-200
	2-3/16	**076133**	P2B-SCMED-203
	2-1/4	**@**	P2B-SCED-204
	55mm	***076227***	*P2B-SCED-55M*
212	2-1/4	**@**	P2B-SCMED-204
	2-7/16	**076014**	P2B-SCED-207
	60mm	***076228***	*P2B-SCED-60M*
214	2-1/2	**076135**	P2B-SCMED-208
	2-11/16	**076015**	P2B-SCED-211
	70mm	***076229***	*P2B-SCED-70M*
215	2-15/16	**076016**	P2B-SCED-215
	75mm	***076230***	*P2B-SCED-75M*
215 (SCU)	2-15/16	**@**	P2B-SCUED-215
	75mm	***@***	*P2B-SCUED-75M*
218	*90mm*	***@***	*P2B-SCED-90M*

@ Assembled to order

DODGE®

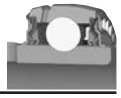

Extreme Duty Setscrew Ball Bearings

SCED AND SCUED NORMAL DUTY PILLOW BLOCKS

Series	Shaft Size	Weight lbs. *kgs*	A	B	C	D		F Bolt Dia.	G	H
						Min.	Max.			
208	1-1/2	5.4	1.94	7.25	1.93	5.18	5.88	1/2	0.91	0.93
	1-5/8	5.3								
	40mm	*2.2*	*49.3*	*184.2*	*49.0*	*131.6*	*149.4*	*M12*	*23.1*	*23.6*
209	1-5/8	6.6	1.94	7.44	2.00	5.50	6.19	1/2	0.90	0.75
	1-11/16	6.4								
	1-3/4	6.2								
	45mm	*2.2*	*49.3*	*189.0*	*50.8*	*139.7*	*157.2*	*M12*	*22.9*	*19.1*
210	1-15/16	7.2	1.94	8.12	2.25	6.00	6.68	5/8	1.02	0.75
	2	7.0								
	50mm	*2.6*	*49.3*	*206.2*	*57.2*	*152.4*	*169.7*	*M16*	*25.9*	*19.1*
211	2	9.0	2.22	8.88	2.30	6.38	7.44	5/8	1.21	0.88
	2-3/16	8.9								
	2-1/4	8.8								
	55mm	*3.3*	*56.4*	*225.6*	*58.4*	*162.1*	*189.0*	*M16*	*30.7*	*22.4*
212	2-1/4	10.8	2.31	9.50	2.37	6.88	7.94	5/8	1.21	0.88
	2-7/16	10.2								
	60mm	*4.2*	*58.7*	*241.3*	*60.2*	*174.8*	*201.7*	*M16*	*30.7*	*22.4*
214	2-1/2	15.5	2.54	10.75	2.69	7.50	8.50	3/4	1.32	0.94
	2-11/16	15.0								
	70mm	*6.9*	*64.5*	*273.1*	*68.3*	*190.5*	*215.9*	*M18*	*33.5*	*23.9*
215	2-15/16	20.5	2.33	11.75	2.88	8.50	9.50	7/8	1.44	1.00
	75mm	*7.9*	*59.2*	*298.5*	*73.2*	*215.9*	*241.3*	*M22*	*36.6*	*25.4*
215	2-15/16	20.7	2.33	11.75	2.88	8.50	9.50	7/8	1.44	1.00
(SCU)	*75mm*	*8.0*	*59.2*	*298.5*	*73.2*	*215.9*	*241.3*	*M22*	*36.6*	*25.4*
218	*90mm*	*13.6*	*65.0*	*355.6*	*85.9*	*262.1*	*295.1*	*M22*	*40.4*	*33.3*

Series	Shaft Size	J	L	M	R	S	U	V	W	X
208	1-1/2	4.19	2.05	2.13	0.75	1.19	3.26	6.52	0.69	0.12
	1-5/8									
	40mm	*106.4*	*52.1*	*54.0*	*19.1*	*30.2*	*82.8*	*165.6*	*17.5*	*3.0*
209	1-5/8	4.28	2.22	2.13	0.75	1.19	3.38	6.76	0.69	0.12
	1-11/16									
	1-3/4									
	45mm	*108.7*	*56.4*	*54.0*	*19.1*	*30.2*	*85.9*	*171.7*	*17.5*	*3.0*
210	1-15/16	4.53	2.43	2.25	0.75	1.19	3.69	7.38	0.81	0.12
	2									
	50mm	*115.1*	*61.7*	*57.2*	*19.1*	*30.2*	*93.7*	*187.5*	*20.6*	*3.0*
211	2	*4.96*	*2.71*	*2.50*	*0.87*	*1.35*	*3.94*	*7.88*	*0.81*	*0.12*
	2-3/16									
	2-1/4									
	55mm	*126.0*	*68.8*	*63.5*	*22.1*	*34.3*	*100.1*	*200.2*	*20.6*	*3.0*
212	2-1/4	5.40	2.97	2.75	0.90	1.41	4.25	8.50	0.88	0.12
	2-7/16									
	60mm	*137.2*	*75.4*	*69.9*	*22.9*	*35.8*	*108.0*	*215.9*	*22.4*	*3.0*
214	2-1/2	6.09	3.31	3.00	1.06	1.48	4.88	9.76	0.94	0.12
	2-11/16									
	70mm	*154.7*	*84.1*	*76.2*	*26.9*	*37.6*	*124.0*	*247.9*	*23.9*	*3.0*
215	2-15/16	6.75	3.62	3.50	0.86	1.47	5.48	10.96	1.04	0.12
	75mm	*171.5*	*91.9*	*88.9*	*21.8*	*37.3*	*139.2*	*278.4*	*26.4*	*3.0*
215	2-15/16	6.50	3.62	3.25	0.86	1.47	5.48	10.96	1.04	0.12
(SCU)	*75mm*	*165.1*	*91.9*	*82.6*	*21.8*	*37.3*	*139.2*	*278.4*	*26.4*	*3.0*
218	*90mm*	*203.2*	*110.5*	*101.6*	*24.4*	*40.6*	*167.6*	*335.3*	*30.2*	*3.0*

FEATURES/BENEFITS PAGE B3-2 | EASY SELECTION PAGE B3-3 | SELECTION PAGE B3-5 | ACCESSORIES PAGE B3-41

SELECTION/DIMENSIONS

DODGE®

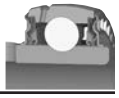

Extreme Duty Setscrew Ball Bearings
SCBED NORMAL DUTY PILLOW BLOCKS

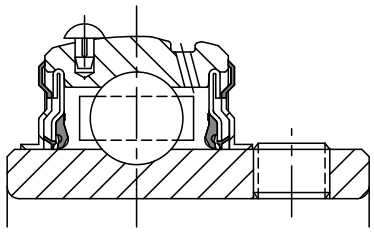

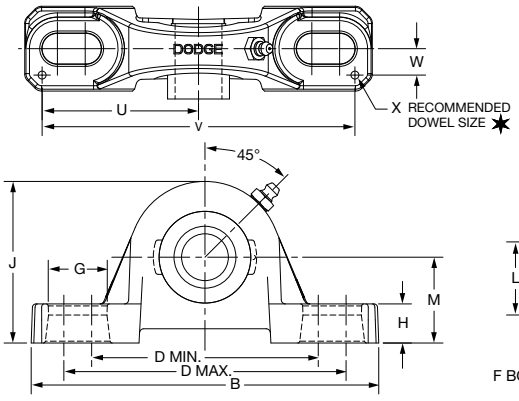

Series	Shaft Size	Part No.	Description	Weight lb. *kgs*	A	B	C	D Min.	D Max.	F Bolt Dia.	G	H
204	1/2	@	P2B-SCBED-008L	1.6	1.23	5.25	1.34	3.38	4.19	3/8	0.85	0.47
	5/8	@	P2B-SCBED-010L	1.5								
	3/4	@	P2B-SCBED-012	1.4								
	20mm	@	*P2B-SCBED-20M*	*0.7*	31.2	133.4	34.0	85.9	106.4	M10	21.6	11.9
205	7/8	@	P2B-SCBED-014	1.8	1.34	5.50	1.40	3.69	4.50	3/8	0.85	0.45
	15/16	@	P2B-SCBED-015	1.7								
	1	@	P2B-SCBED-100	1.6								
	25mm	@	*P2B-SCBED-25M*	*0.7*	*34.0*	*139.7*	*35.6*	*93.7*	*114.3*	*M10*	*21.6*	*11.4*
206	1-1/16	@	P2B-SCBED-101	2.8	1.52	6.25	1.75	4.25	5.00	1/2	0.94	0.62
	1-1/8	@	P2B-SCBED-102	2.7								
	1-3/16	@	P2B-SCBED-103	2.6								
	1-1/4	@	P2B-SCBED-104S	2.5								
	30mm	@	*P2B-SCBED-30M*	*1.1*	38.6	158.8	44.5	108.0	127.0	M12	23.9	15.8
207	1-1/4	@	P2B-SCBED-104	4.5	1.71	6.50	1.75	4.68	5.44	1/2	0.94	0.65
	1-5/16	@	P2B-SCBED-105	4.4								
	1-3/8	@	P2B-SCBED-106	4.3								
	1-7/16	@	P2B-SCBED-107	4.2								
	35mm	@	*P2B-SCBED-35M*	*1.5*	*43.4*	*165.1*	*44.5*	*118.9*	*138.2*	*M12*	*23.9*	*16.5*
208	1-1/2	@	P2B-SCBED-108	5.4	1.94	7.25	1.93	5.18	5.88	1/2	0.91	0.75
	1-5/8	@	P2B-SCBED-110	5.3								
	40mm	@	*P2B-SCBED-40M*	*2.2*	*49.3*	*184.2*	*49.0*	*131.6*	*149.4*	*M12*	*23.1*	*19.1*
209	1-5/8	@	P2B-SCBED-110L	6.6	1.94	7.44	2.00	5.50	6.19	1/2	0.90	0.69
	1-11/16	@	P2B-SCBED-111	6.4								
	1-3/4	@	P2B-SCBED-112	6.2								
	45mm	***076545***	*P2B-SCBED-45M*	*2.2*	*49.3*	*189.0*	*50.8*	*139.7*	*157.2*	*M12*	*22.9*	*17.5*
210	1-15/16	@	P2B-SCBED-115	7.2	1.94	8.12	2.25	6.00	6.68	5/8	1.02	0.68
	2	@	P2B-SCBED-200	7.0								
	50mm	@	*P2B-SCBED-50M*	*2.6*	*49.3*	*206.2*	*57.2*	*152.4*	*169.7*	*M16*	*25.9*	*17.3*
211	2	@	P2B-SCBED-200L	9.0	2.22	8.88	2.30	6.38	7.44	5/8	1.21	0.81
	2-3/16	@	P2B-SCBED-203	8.9								
	2-1/4	@	P2B-SCBED-204	8.8								
	55mm	@	*P2B-SCBED-55M*	*3.3*	*56.4*	*225.6*	*58.4*	*162.1*	*189.0*	*M16*	*30.7*	*20.6*
212	2-1/4	@	P2B-SCBED-204L	10.8	2.31	9.50	2.37	6.88	7.94	5/8	1.21	0.81
	2-7/16	**077453**	P2B-SCBED-207	10.2								
	60mm	@	*P2B-SCBED-60M*	*4.2*	*58.7*	*241.3*	*60.2*	*174.8*	*201.7*	*M16*	*30.7*	*20.6*
215	2-15/16	@	P2B-SCBED-215	20.5	2.33	11.75	2.88	8.50	9.50	7/8	1.44	1.06
	75mm	@	*P2B-SCBED-75M*	*7.9*	*59.2*	*298.5*	*73.2*	*215.9*	*241.3*	*M22*	*36.6*	*26.9*

@ Assembled to order.

FEATURES/BENEFITS PAGE B3-2	EASY SELECTION PAGE B3-3	SELECTION PAGE B3-5	ACCESSORIES PAGE B3-41

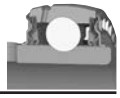

Extreme Duty Setscrew Ball Bearings
SCBED NORMAL DUTY PILLOW BLOCKS

Series	Shaft Size	J	L	M	R	S	U	V	W	X
204	1/2 5/8 3/4 *20mm*	2.49 *63.2*	1.12 *28.4*	1.25 *31.8*	0.50 *12.7*	0.73 *18.5*	2.25 *57.2*	4.50 *114.3*	0.50 *12.7*	0.12 *3.0*
205	7/8 15/16 1 *25mm*	2.64 *67.1*	1.32 *33.5*	1.31 *33.3*	0.56 *14.2*	0.78 *19.8*	2.50 *63.5*	5.00 *127.0*	0.50 *12.7*	0.12 *3.0*
206	1-1/16 1-1/8 1-3/16 1-1/4 *30mm*	3.19 *81.0*	1.57 *39.9*	1.56 *39.6*	0.58 *14.7*	0.94 *23.9*	2.88 *73.2*	5.76 *146.3*	0.56 *14.2*	0.12 *3.0*
207	1-1/4 1-5/16 1-3/8 1-7/16 *35mm*	3.69 *93.7*	1.84 *46.7*	1.81 *46.0*	0.67 *17.0*	1.04 *26.4*	2.91 *73.9*	5.82 *147.8*	0.56 *14.2*	0.12 *3.0*
208	1-1/2 1-5/8 *40mm*	4.00 101.6	2.05 52.1	1.94 49.3	0.75 19.1	1.19 30.2	3.26 82.8	6.52 165.6	0.69 17.5	0.12 3.0
209	1-5/8 1-11/16 1-3/4 *45mm*	4.21 106.9	2.22 56.4	2.06 52.3	0.75 19.1	1.19 30.2	3.38 85.9	6.76 171.7	0.69 17.5	0.12 3.0
210	1-15/16 2 *50mm*	4.47 113.5	2.43 61.7	2.19 55.6	0.75 19.1	1.19 30.2	3.69 93.7	7.38 187.5	0.81 20.6	0.12 3.0
211	2 2-3/16 2-1/4 *55mm*	4.90 124.5	2.71 68.8	2.44 62.0	0.87 22.1	1.35 34.3	3.94 100.1	7.88 200.2	0.81 20.6	0.12 3.0
212	2-1/4 2-7/16 *60mm*	5.34 135.6	2.97 75.4	2.69 68.3	0.90 22.9	1.41 35.8	4.25 108.0	8.50 215.9	0.88 22.4	0.12 3.0
215	2-15/16 *75mm*	6.56 *166.6*	3.62 *91.9*	3.31 *84.1*	0.86 *21.8*	1.47 *37.3*	5.48 *139.2*	10.96 *278.4*	1.04 *26.4*	0.12 *3.0*

SELECTION/DIMENSIONS

Extreme Duty Setscrew Ball Bearings
SCMED MEDIUM DUTY PILLOW BLOCKS

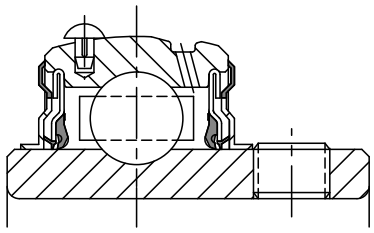

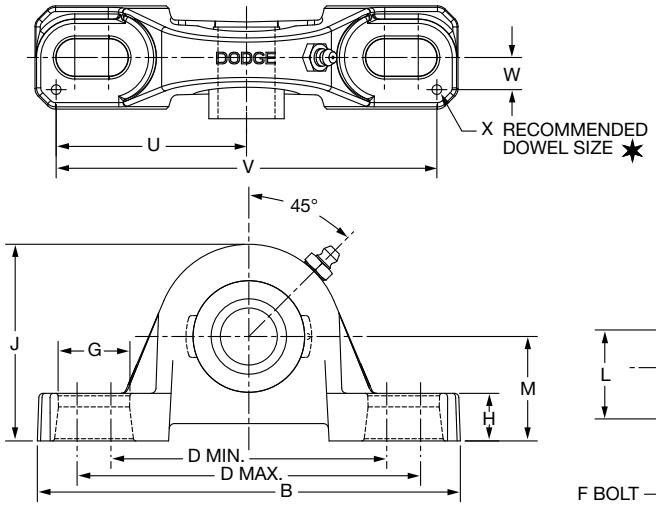

Series	Shaft Size	Standard Part No.	Description
206	1	**076125**	P2B-SCMED-100
	25mm	***076296***	*P2B-SCMED-25M*
206 (SCMU)	1	**@**	P2B-SCMU-100
	25mm	***@***	*P2B-SCMU-25M*
207	1-3/16	**076126**	P2B-SCMED-103
	1-1/4	**076005**	P2B-SCED-104
	30mm	***076297***	*P2B-SCMED-30M*
208	1-7/16	**076127**	P2B-SCMED-107
	35mm	***076298***	*P2B-SCMED-35M*
209	1-1/2	**076128**	P2B-SCMED-108
	1-5/8	**@**	P2B-SC-110L
	40mm	***076299***	*P2B-SCMED-40M*
210	1-11/16	**076129**	P2B-SCMED-111
	1-3/4	**076130**	P2B-SCMED-112
	45mm	***076300***	*P2B-SCMED-45M*
211	1-15/16	**076131**	P2B-SCMED-115
	2	**076132**	P2B-SCMED-200
	50mm	***076301***	*P2B-SCMED-50M*
212	2-3/16	**076133**	P2B-SCMED-203
	2-1/4	**@**	P2B-SCMED-204
	55mm	***076302***	*P2B-SCMED-55M*
214	2-7/16	**076134**	P2B-SCMED-207
	2-1/2	**076135**	P2B-SCMED-208
	65mm	***076303***	*P2B-SCMED-65M*
215	2-11/16	**076136**	P2B-SCMED-211
	70mm	***076304***	*P2B-SCMED-70M*
216	2-15/16	**076137**	P2B-SCMED-215
	3	**076138**	P2B-SCMED-300
	75mm	***076305***	*P2B-SCMED-75M*
218	3-7/16	**076139**	P2B-SCMED-307
	3-1/2	**076140**	P2B-SCMED-308
	85mm	***076306***	*P2B-SCMED-85M*

@ Assembled to order

DODGE®

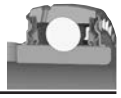

Extreme Duty Setscrew Ball Bearings
SCMED MEDIUM DUTY PILLOW BLOCKS

Series	Shaft Size	Weight lbs. / kgs	A	B	C	D Min.	D Max.	F Bolt Dia.	G	H
206	1	3.0	1.52	6.25	1.75	4.25	5.00	1/2	0.94	0.68
	25mm	*1.3*	*38.6*	*158.8*	*44.5*	*108.0*	*127.0*	*M12*	*23.9*	*17.3*
206 (SCMU)	1	3.1	1.52	6.25	1.75	4.25	5.00	1/2	0.94	0.75
	25mm	*1.4*	*38.6*	*158.8*	*44.5*	*108.0*	*127.0*	*M12*	*23.9*	*19.1*
207	1-3/16	4.6	1.71	6.50	1.75	4.68	5.44	1/2	0.94	0.71
	1-1/4	4.2								
	30mm	*2.0*	*43.4*	*165.1*	*44.5*	*118.9*	*138.2*	*M12*	*23.9*	*18.0*
208	1-7/16	5.4	1.94	7.25	1.93	5.18	5.88	1/2	0.91	0.93
	35mm	*2.3*	*49.3*	*184.2*	*49.0*	*131.6*	*149.4*	*M12*	*23.1*	*23.6*
209	1-1/2	6.4	1.94	7.44	2.00	5.50	6.19	1/2	0.90	0.75
	1-5/8	6.3								
	40mm	*2.7*	*49.3*	*189.0*	*50.8*	*139.7*	*157.2*	*M12*	*22.9*	*19.1*
210	1-11/16	7.4	1.94	8.12	2.25	6.00	6.68	5/8	1.02	0.75
	1-3/4	7.3								
	45mm	*3.2*	*49.3*	*206.2*	*57.2*	*152.4*	*169.7*	*M16*	*25.9*	*19.1*
211	1-15/16	9.2	2.22	8.88	2.30	6.38	7.44	5/8	1.21	0.88
	2	9.0								
	50mm	*3.9*	*56.4*	*225.6*	*58.4*	*162.1*	*189.0*	*M16*	*30.7*	*22.4*
212	2-3/16	11.0	2.31	9.50	2.37	6.88	7.94	5/8	1.21	0.88
	2-1/4	10.8								
	55mm	*4.7*	*58.7*	*241.3*	*60.2*	*174.8*	*201.7*	*M16*	*30.7*	*22.4*
214	2-7/16	15.7	2.54	10.75	2.69	7.50	8.50	3/4	1.32	0.94
	2-1/2	15.5								
	65mm	*6.7*	*64.5*	*273.1*	*68.3*	*190.5*	*215.9*	*M18*	*33.5*	*23.9*
215	2-11/16	21.0	2.33	11.75	2.88	8.50	9.50	7/8	1.44	1.00
	70mm	*9.0*	*59.2*	*298.5*	*73.2*	*215.9*	*241.3*	*M22*	*36.6*	*25.4*
216	2-15/16	21.3	2.38	11.75	3.00	8.50	9.50	7/8	1.44	1.25
	3	21.1								
	75mm	*9.0*	*60.5*	*298.5*	*76.2*	*215.9*	*241.3*	*M22*	*36.6*	*31.8*
218	3-7/16	31.8	2.56	14.00	3.38	10.32	11.62	7/8	1.59	1.31
	3-1/2	31.3								
	85mm	*13.6*	*65.0*	*355.6*	*85.9*	*262.1*	*295.1*	*M22*	*40.4*	*33.3*

Series	Shaft Size	J	L	M	R	S	U	V	W	X
206	1	3.25	1.57	1.63	0.58	0.94	2.88	5.76	0.56	0.12
	25mm	*82.6*	*39.9*	*41.3*	*14.7*	*23.9*	*73.2*	*146.3*	*14.2*	*3.0*
206 (SCMU)	1	3.31	1.57	1.69	0.58	0.94	2.88	5.76	0.56	0.12
	25mm	*84.1*	*39.9*	*42.9*	*14.7*	*23.9*	*73.2*	*146.3*	*14.2*	*3.0*
207	1-3/16	3.75	1.84	1.88	0.67	1.04	2.91	5.82	0.56	0.12
	1-1/4									
	30mm	*95.3*	*46.7*	*47.6*	*17.0*	*26.4*	*73.9*	*147.8*	*14.2*	*3.0*
208	1-7/16	4.19	2.05	2.13	0.75	1.19	3.26	6.52	0.69	0.12
	35mm	*106.4*	*52.1*	*54.0*	*19.1*	*30.2*	*82.8*	*165.6*	*17.5*	*3.0*
209	1-1/2	4.28	2.22	2.13	0.75	1.19	3.38	6.76	0.69	0.12
	1-5/8									
	40mm	*108.7*	*56.4*	*54.0*	*19.1*	*30.2*	*85.9*	*171.7*	*17.5*	*3.0*
210	1-11/16	4.53	2.43	2.25	0.75	1.19	3.69	7.38	0.81	0.12
	1-3/4									
	45mm	*115.1*	*61.7*	*57.2*	*19.1*	*30.2*	*93.7*	*187.5*	*20.6*	*3.0*
211	1-15/16	4.96	2.71	2.50	0.87	1.35	3.94	7.88	0.81	0.12
	2									
	50mm	*126.0*	*68.8*	*63.5*	*22.1*	*34.3*	*100.1*	*200.2*	*20.6*	*3.0*
212	2-3/16	5.40	2.97	2.75	0.90	1.41	4.25	8.50	0.88	0.12
	2-1/4									
	55mm	*137.2*	*75.4*	*69.9*	*22.9*	*35.8*	*108.0*	*215.9*	*22.4*	*3.0*
214	2-7/16	6.09	3.31	3.00	1.06	1.48	4.88	9.76	0.94	0.12
	2-1/2									
	65mm	*154.7*	*84.1*	*76.2*	*26.9*	*37.6*	*124.0*	*247.9*	*23.9*	*3.0*
215	2-11/16	6.75	3.62	3.50	0.86	1.47	5.48	10.96	1.04	0.12
	70mm	*171.5*	*91.9*	*88.9*	*21.8*	*37.3*	*139.2*	*278.4*	*26.4*	*3.0*
216	2-15/16	6.97	3.83	3.50	0.88	1.50	5.50	11.00	1.09	0.12
	3									
	75mm	*177.0*	*97.3*	*88.9*	*22.4*	*38.1*	*139.7*	*279.4*	*27.7*	*3.0*
218	3-7/16	8.00	4.35	4.00	0.96	1.60	6.60	13.20	1.19	0.12
	3-1/2									
	85mm	*203.2*	*110.5*	*101.6*	*24.4*	*40.6*	*167.6*	*335.3*	*30.2*	*3.0*

FEATURES/BENEFITS PAGE B3-2 | EASY SELECTION PAGE B3-3 | SELECTION PAGE B3-5 | ACCESSORIES PAGE B3-41

SELECTION/DIMENSIONS

DODGE®

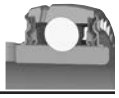

Extreme Duty Setscrew Ball Bearings
SCED NORMAL DUTY TAPPED BASE PILLOW BLOCKS

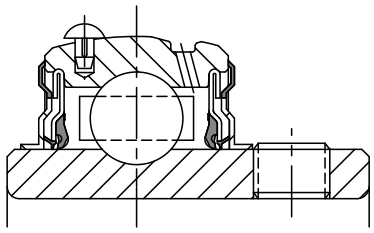

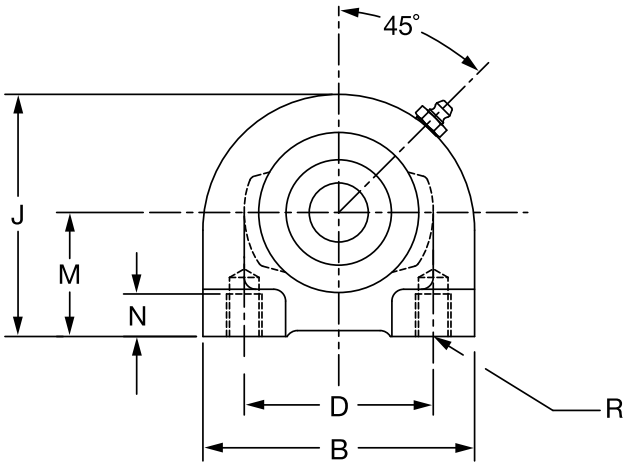

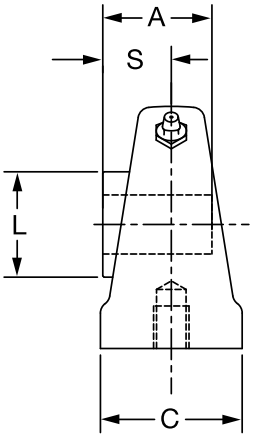

Series	Shaft Size	Part No.	Description	Weight lbs *kg*	A	B	C	D	J	L	M	N	R	S
204	1/2	@	TB-SCED-008	1.56	1.23	2.88	1.50	2.00	2.56	1.12	1.31	0.50	3/8-16	0.73
	5/8	**077418**	TB-SCED-010	1.53										
	3/4	**076017**	TB-SCED-012	1.50										
	20mm	***076231***	*TB-SCED-20M*	*0.06*	*31.2*	*73.2*	*38.1*	*50.8*	*65.0*	*28.4*	*33.4*	*12.7*	*M8x1.25*	*18.5*
205	7/8	@	TB-SCED-014	1.93	1.34	3.00	1.50	2.00	2.81	1.32	1.44	0.50	3/8-16	0.78
	15/16	@	TB-SCED-015	1.90										
	1	**076018**	TB-SCED-100	1.87										
	25mm	***076232***	*TB-SCED-25M*	*0.07*	*34.0*	*76.2*	*38.1*	*50.8*	*71.4*	*33.5*	*36.5*	*12.7*	*M10x1.5*	*19.8*
206	1-1/16	@	TB-SCED-101	2.66	1.52	4.00	1.50	3.00	3.38	1.57	1.69	0.63	7/16-14	0.94
	1-1/8	**076019**	TB-SCED-102	2.62										
	1-3/16	**076020**	TB-SCED-103	2.59										
	1-1/4	**076021**	TB-SCED-104S	2.56										
	30mm	***076233***	*TB-SCED-30M*	*0.10*	*38.6*	*101.6*	*38.1*	*76.2*	*85.9*	*39.9*	*42.9*	*16.0*	*M10x1.5*	*23.9*
207	1-1/4	**076022**	TB-SCED-104	3.41	1.71	4.25	1.88	3.25	3.75	1.84	1.88	0.75	1/2-13	1.04
	1-5/16	@	TB-SCED-105	3.36										
	1-3/8	**076023**	TB-SCED-106	3.34										
	1-7/16	**076024**	TB-SCED-107	3.25										
	35mm	***076234***	*TB-SCED-35M*	*0.13*	*43.4*	*108.0*	*47.8*	*82.6*	*95.3*	*46.7*	*47.6*	*19.1*	*M10x1.5*	*26.4*
208	1-1/2	**076025**	TB-SCED-108	4.10	1.94	4.63	1.88	3.50	3.94	2.05	1.94	0.75	1/2-13	1.19
	1-5/8	@	TB-SCED-110	4.00										
	40mm	***076235***	*TB-SCED-40M*	*0.16*	*49.3*	*117.6*	*47.8*	*88.9*	*100.1*	*52.1*	*49.2*	*19.1*	*M12x1.75*	*30.2*
209	1-5/8	@	TB-SCED-110L	5.20	1.94	5.00	2.00	3.75	4.25	2.22	2.13	0.75	1/2-13	1.19
	1-11/16	**076026**	TB-SCED-111	5.00										
	1-3/4	**076027**	TB-SCED-112	4.90										
	45mm	***076236***	*TB-SCED-45M*	*0.20*	*49.3*	*127.0*	*50.8*	*95.3*	*108.0*	*56.4*	*54.0*	*19.1*	*M12x1.75*	*30.2*
210	1-15/16	**076028**	TB-SCED-115	5.40	*1.94*	*5.50*	*2.00*	*4.00*	*4.63*	*2.43*	*2.25*	*0.88*	*5/8-11*	*1.19*
	2	**076029**	TB-SCED-200	5.20										
	50mm	***076237***	*TB-SCED-50M*	*0.21*	*49.3*	*139.7*	*50.8*	*101.6*	*117.6*	*61.7*	*57.2*	*22.4*	*M16x2*	*30.2*
211	2	@	TB-SCED-200L	6.70	2.22	5.50	2.00	4.00	4.63	2.71	2.25	0.88	5/8-11	1.35
	2-3/16	**076030**	TB-SCED-203	6.50										
	2-1/4	@	TB-SCED-204	6.30										
	55mm	***076238***	*TB-SCED-55M*	*0.25*	*56.4*	*139.7*	*50.8*	*101.6*	*117.6*	*68.8*	*57.2*	*22.4*	*M16x2*	*34.3*

@ Assembled to order

FEATURES/BENEFITS PAGE B3-2	EASY SELECTION PAGE B3-3	SELECTION PAGE B3-5	ACCESSORIES PAGE B3-41

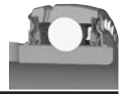

Extreme Duty Setscrew Ball Bearings
SCED NORMAL DUTY 2-BOLT FLANGE BEARINGS

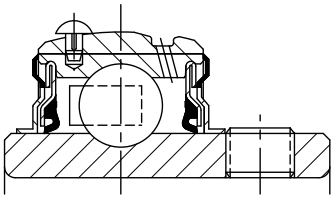

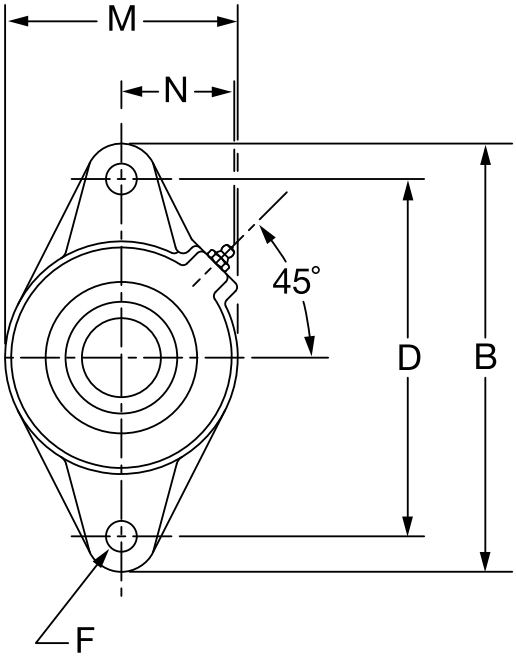

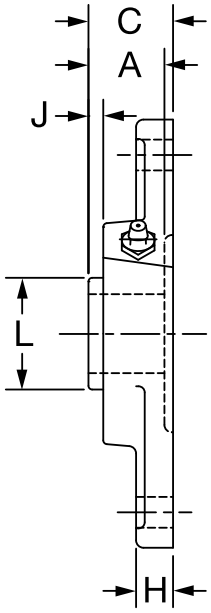

Series	Shaft Size	Standard Part No.	Description	Weight Lbs. kg	A	B	C	D	F Bolt Dia.	H	J	L	M	N
204	1/2	@	F2B-SCED-008L	1.6	1.23	4.41	1.34	3.53	3/8	0.50	0.36	1.12	2.38	1.50
	5/8	@	F2B-SCED-010L	1.5										
	3/4	**076031**	F2B-SCED-012	1.4										
	20mm	***076239***	*F2B-SCED-20M*	*0.5*	*31.2*	*112.0*	*34.0*	*89.7*	*M10*	*12.7*	*9.1*	*28.4*	*60.5*	*38.1*
205	7/8	@	F2B-SCED-014	1.6	1.34	4.88	1.37	3.89	7/16	0.52	0.42	1.32	2.75	1.44
	15/16	@	F2B-SCED-015	1.5										
	1	**076032**	F2B-SCED-100	1.4										
	25mm	***076240***	*F2B-SCED-25M*	*0.6*	*34.0*	*124.0*	*34.8*	*98.8*	*M10*	*13.2*	*10.7*	*33.5*	*69.9*	*36.6*
206	1-1/16	@	F2B-SCED-101	2.3	1.52	5.56	1.56	4.59	7/16	0.50	0.49	1.57	3.13	1.56
	1-1/8	**076033**	F2B-SCED-102	2.2										
	1-3/16	**076034**	F2B-SCED-103	2.1										
	1-1/4	**076035**	F2B-SCED-104S	2.0										
	30mm	***076241***	*F2B-SCED-30M*	*1.0*	*38.6*	*141.2*	*39.6*	*116.7*	*M10*	*12.7*	*12.4*	*39.9*	*79.5*	*39.6*
207	1-1/4	**076036**	F2B-SCED-104	3.5	1.71	6.13	1.75	5.12	1/2	0.56	0.53	1.84	3.75	1.84
	1-5/16	@	F2B-SCED-105	3.4										
	1-3/8	**076037**	F2B-SCED-106	3.2										
	1-7/16	**076038**	F2B-SCED-107	3.1										
	35mm	***076242***	*F2B-SCED-35M*	*1.5*	*43.4*	*155.7*	*44.5*	*130.0*	*M12*	*14.2*	*13.5*	*46.7*	*95.3*	*46.7*

@Assembled to order

FEATURES/BENEFITS PAGE B3-2	EASY SELECTION PAGE B3-3	SELECTION PAGE B3-5	ACCESSORIES PAGE B3-41

SELECTION/DIMENSIONS

DODGE®

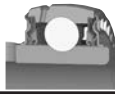

Extreme Duty Setscrew Ball Bearings
SCED NORMAL DUTY 2-BOLT FLANGE BEARINGS

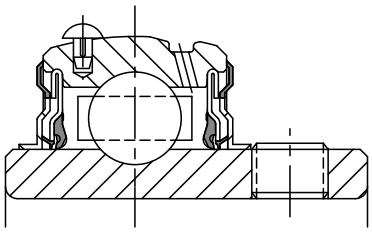

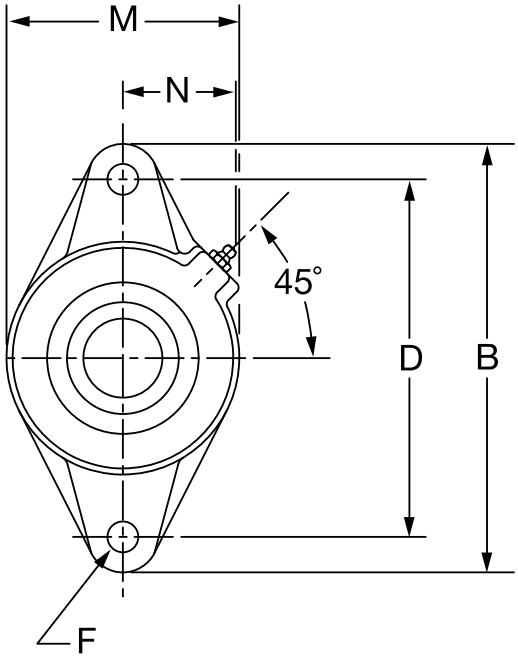

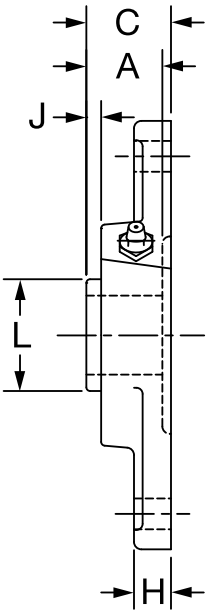

Series	Shaft Size	Standard Part No.	Description	Weight lbs kg	A	B	C	D	F Bolt Dia.	H	J	L	M	N
	1-1/2	**076039**	F2B-SCED-108	4.1	1.94	6.75	1.98	5.66	1/2	0.56	0.63	2.05	4.13	1.83
208	1-5/8	**@**	F2B-SCED-110	4.0										
	40mm	***076243***	*F2B-SCED-40M*	*1.8*	*49.3*	*171.5*	*50.3*	*143.8*	*M12*	*14.2*	*16.0*	*52.1*	*104.9*	*46.5*
	1-5/8	**@**	F2B-SCED-110L	5.2	1.94	7.06	1.99	5.84	1/2	0.63	0.59	2.22	4.38	1.91
	1-11/16	**076040**	F2B-SCED-111	5.0										
209	1-3/4	**076041**	F2B-SCED-112	4.9										
	1-13/16	**@**	F2B-SCED-113	4.7										
	45mm	***076244***	*F3B-SCED-45M*	*2.2*	*49.3*	*179.3*	*50.5*	*148.3*	*M14*	*16.0*	*15.0*	*56.4*	*111.3*	*48.5*
	1-15/16	**076042**	F2B-SCED-115	5.4	1.94	7.44	2.02	6.19	1/2	0.63	0.55	2.43	4.56	2.03
210	2	**076043**	F2B-SCED-200	5.2										
	50mm	***076245***	*F2B-SCED-50M*	*2.5*	*49.3*	*189.0*	*51.3*	*157.2*	*M16*	*16.0*	*14.0*	*61.7*	*115.8*	*51.6*
	2	**076148**	F2B-SCMED-200	6.7	2.22	8.63	2.28	7.25	5/8	0.67	0.68	2.71	5.25	2.27
211	2-3/16	**076044**	F2B-SCED-203	6.5										
	2-1/4	**075697**	F2B-SCED-204	6.3										
	55mm	***@***	*F2B-SCED-55M*	*3.0*	*56.4*	*219.2*	*57.9*	*184.2*	*M16*	*17.0*	*17.3*	*68.8*	*133.4*	*57.7*
	2-1/4	**@**	F2B-SCMED-204	7.4	2.31	9.81	2.38	7.96	5/8	0.81	0.66	2.97	5.50	2.47
212	2-7/16	**076045**	F2B-SCED-207	7.0										
	60mm	***077773***	*F2B-SCED-60M*	*3.4*	*58.7*	*249.2*	*60.5*	*202.1*	*M22*	*20.6*	*16.8*	*75.4*	*139.7*	*62.7*

@Assembled to order

FEATURES/BENEFITS PAGE B3-2	EASY SELECTION PAGE B3-3	SELECTION PAGE B3-5	ACCESSORIES PAGE B3-41

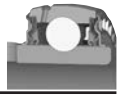

Extreme Duty Setscrew Ball Bearings
SCMED MEDIUM DUTY 2-BOLT FLANGE BEARINGS

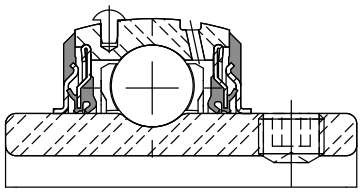

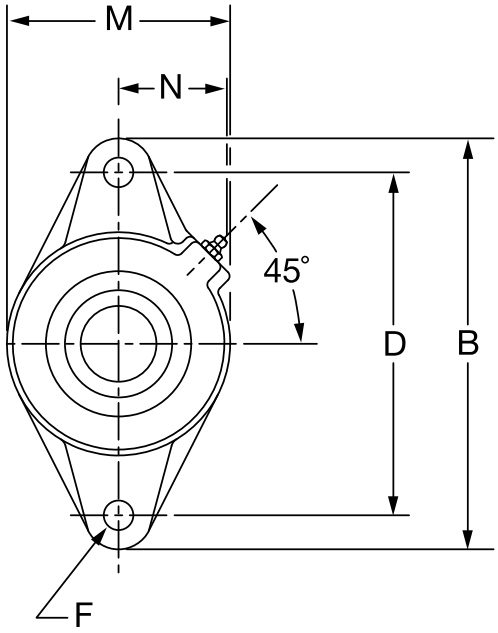

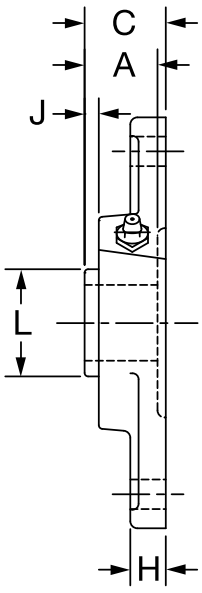

Series	Shaft Size	Standard Part No.	Description	Weight lbs. kgs.	A	B	C	D	F Bolt Dia.	J	K	L	M	N
206	1	**076141**	F2B-SCMED-100	2.4	1.52	5.56	1.56	4.59	7/16	0.50	0.49	1.57	3.13	1.56
	25mm	***076307***	*F2B-SCMED-25M*	*1.0*	*38.6*	*141.2*	*39.6*	*116.7*	*M10*	*12.7*	*12.4*	*39.9*	*79.5*	*39.6*
207	1-3/16	**076142**	F2B-SCMED-103	3.6	1.71	6.13	1.75	5.12	1/2	0.56	0.53	1.84	3.75	1.84
	1-1/4	**@**	F2B-SCED-104	3.5										
	30mm	***076308***	*F2B-SCMED-30M*	*1.6*	*43.4*	*155.7*	*44.5*	*130.0*	*M12*	*14.2*	*13.5*	*46.7*	*95.3*	*46.7*
208	1-7/16	**076143**	F2B-SCMED-107	4.1	1.94	6.75	1.98	5.66	1/2	0.56	0.63	2.05	4.13	1.83
	35mm	***076309***	*F2B-SCMED-35M*	*1.9*	*49.3*	*171.5*	*50.3*	*143.8*	*M12*	*14.2*	*16.0*	*52.1*	*104.9*	*46.5*
209	1-1/2	**076144**	F2B-SCMED-108	5.3	1.94	7.06	1.99	5.84	1/2	0.63	0.59	2.22	4.38	1.91
	1-5/8	**@**	F2B-SCED-110L	5.2										
	40mm	***076310***	*F2B-SCMED-40M*	*2.3*	*49.3*	*179.3*	*50.5*	*148.3*	*M14*	*16.0*	*15.0*	*56.4*	*111.3*	*48.5*
210	1-11/16	**076145**	F2B-SCMED-111	5.8	1.94	7.44	2.02	6.19	1/2	0.63	0.55	2.43	4.56	2.03
	1-3/4	**076146**	F2B-SCMED-112	5.6										
	45mm	***076311***	*F2B-SCMED-45M*	*2.6*	*49.3*	*189.0*	*51.3*	*157.2*	*M16*	*16.0*	*14.0*	*61.7*	*115.8*	*51.6*
211	1-15/16	**076147**	F2B-SCMED-115	6.7	2.22	8.63	2.28	7.25	5/8	0.67	0.68	2.71	5.25	2.27
	2	**076148**	F2B-SCMED-200	6.5										
	50mm	***076312***	*F2B-SCMED-50M*	*2.9*	*56.4*	*219.2*	*57.9*	*184.2*	*M16*	*17.0*	*17.3*	*68.8*	*133.4*	*57.7*
212	2-3/16	**076149**	F2B-SCMED-203	7.4	2.31	9.81	2.38	7.96	5/8	0.81	0.66	2.97	5.50	2.47
	2-1/4	**@**	F2B-SCMED-204	7.2										
	55mm	***@***	*F2B-SCMED-55M*	*3.2*	*58.7*	*249.2*	*60.5*	*202.1*	*M22*	*20.6*	*16.8*	*75.4*	*139.7*	*62.7*

@ Assembled to order

FEATURES/BENEFITS PAGE B3-2 | EASY SELECTION PAGE B3-3 | SELECTION PAGE B3-5 | ACCESSORIES PAGE B3-41

SELECTION/DIMENSIONS

Extreme Duty Setscrew Ball Bearings
SCED NORMAL DUTY 4-BOLT FLANGE BEARINGS

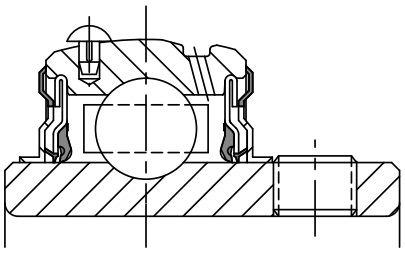

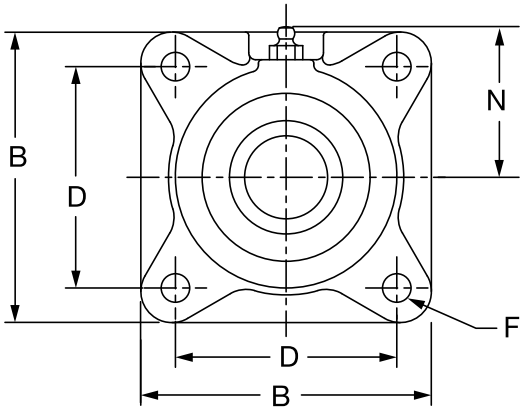

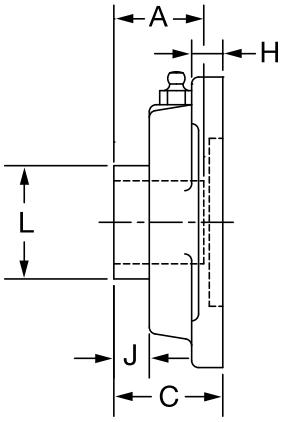

Series	Shaft Size	Standard Part No.	Description	Weights lbs kgs	A	B	C	D	F	H	J	L	N
	1/2	@	F4B-SCED-008L	1.8	1.23	3.38	1.34	2.5	3/8	0.44	0.36	1.12	1.94
	5/8	@	F4B-SCED-010L	1.7									
204	3/4	**076046**	F4B-SCED-012	1.6									
	13/16	@	F4B-SCED-013	1.5									
	20mm	***076246***	*F4B-SCED-20M*	*0.8*	*31.2*	*85.9*	*34.0*	*63.5*	*M10*	*11.2*	*9.1*	*28.4*	*49.3*
	7/8	@	F4B-SCED-014	2.0	1.34	3.75	1.37	2.75	7/16	0.50	0.42	1.32	2.06
205	15/16	@	F4B-SCED-015	1.9									
	1	**076047**	F4B-SCED-100	1.8									
	25mm	***076247***	*F4B-SCED-25M*	*0.9*	*34.0*	*95.3*	*34.8*	*69.9*	*M10*	*12.7*	*10.7*	*33.5*	*52.3*
	1-1/16	@	F4B-SCED-101	2.9	*1.52*	*4.25*	*1.56*	*3.25*	*7/16*	*0.50*	*0.49*	*1.57*	*2.19*
	1-1/8	**076048**	F4B-SCED-102	2.8									
206	1-3/16	**076049**	F4B-SCED-103	2.7									
	1-1/4	**076050**	F4B-SCED-104S	2.6									
	30mm	***076248***	*F4B-SCED-30M*	*1.3*	*38.6*	*108.0*	*39.6*	*82.6*	*M10*	*12.7*	*12.4*	*39.9*	*55.6*
	1-1/4	**076051**	F4B-SCED-104	4.0	1.71	4.75	1.75	3.63	1/2	0.56	0.53	1.84	2.44
	1-5/16	@	F4B-SCED-105	3.9									
207	1-3/8	**076052**	F4B-SCED-106	3.8									
	1-7/16	**076053**	F4B-SCED-107	3.7									
	35mm	***076249***	*F4B-SCED-35M*	*1.7*	*43.4*	*120.7*	*44.5*	*92.1*	*M12*	*14.2*	*13.5*	*46.7*	*62.0*
	1-1/2	**076054**	F4B-SCED-108	4.8	*1.94*	*5.13*	*1.98*	*4.00*	*1/2*	*0.56*	*0.63*	*2.05*	*2.38*
208	1-5/8	@	F4B-SCED-110	4.7									
	40mm	***076250***	*F4B-SCED-40M*	*2.1*	*49.3*	*130.3*	*50.0*	*101.6*	*M12*	*14.2*	*16.0*	*52.1*	*60.5*

@ Assembled to order

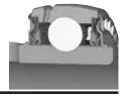

Extreme Duty Setscrew Ball Bearings
SCED NORMAL DUTY 4-BOLT FLANGE BEARINGS

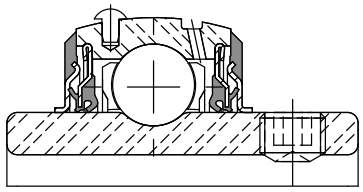

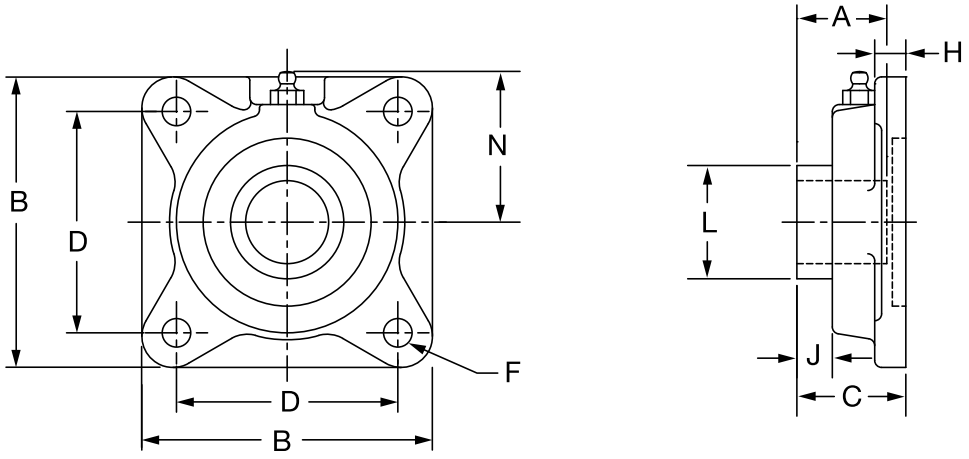

Series	Shaft Size	Standard Part No.	Description	Weight lbs. kg.	A	B	C	D	F	H	J	L	N
209	1-5/8	**075775**	F4B-SCED-110L	6.1	1.94	5.38	1.99	4.13	1/2	0.63	0.59	2.22	2.75
	1-11/16	**076055**	F4B-SCED-111	6.0									
	1-3/4	**076056**	F4B-SCED-112	5.9									
	45mm	***076251***	*F4B-SCED-45M*	*2.7*	*49.3*	*136.7*	*50.5*	*104.8*	*M14*	*16.0*	*15.0*	*56.4*	*69.9*
210	1-15/16	**076057**	F4B-SCED-115	6.7	1.94	5.63	2.02	4.38	1/2	0.63	0.55	2.43	2.88
	2	**076058**	F4B-SCED-200	6.6									
	50mm	***076252***	*F4B-SCED-50M*	*3.0*	*49.3*	*143.0*	*51.3*	*111.1*	*M16*	*16.0*	*14.0*	*61.7*	*73.2*
211	2	**076157**	F4B-SCMED-200	9.3	2.22	6.50	2.28	5.13	5/8	0.69	0.68	2.71	3.25
	2-3/16	**076059**	F4B-SCED-203	9.0									
	2-1/4	**@**	F4B-SCED-204	8.9									
	55mm	***076253***	*F4B-SCED-55M*	*4.1*	*56.4*	*165.1*	*57.9*	*130.2*	*M16*	*17.5*	*17.3*	*68.8*	*82.6*
212	2-1/4	**076649**	F4B-SCMED-204	11.1	2.31	6.88	2.38	5.63	5/8	0.69	0.66	2.97	3.50
	2-7/16	**076060**	F4B-SCED-207	10.6									
	60mm	***076254***	*F4B-SCED-60M*	*6.0*	*58.7*	*174.8*	*60.5*	*142.9*	*M16*	*17.5*	*16.8*	*75.4*	*88.9*
214	2-1/2	**076160**	F4B-SCMED-208	16.0	2.54	7.38	2.78	5.88	5/8	0.69	0.60	3.31	3.69
	2-11/16	**076061**	F4B-SCED-211	15.4									
	70mm	***076255***	*F4B-SCED-70M*	*6.9*	*64.5*	*187.5*	*70.6*	*149.2*	*M16*	*17.5*	*15.2*	*84.1*	*93.7*
215	2-15/16	**076062**	F4B-SCED-215	17.6	2.33	7.75	2.88	6.00	3/4	1.00	0.63	3.62	3.88
	75mm	***076256***	*F4B-SCED-75M*	*8.0*	*59.2*	*196.9*	*73.2*	*152.4*	*M18*	*25.4*	*16.0*	*91.9*	*98.6*

@ Assembled to order

FEATURES/BENEFITS PAGE B3-2	EASY SELECTION PAGE B3-3	SELECTION PAGE B3-5	ACCESSORIES PAGE B3-41

SELECTION/DIMENSIONS

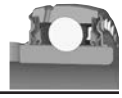

Extreme Duty Setscrew Ball Bearings
SCMED MEDIUM DUTY 4-BOLT FLANGE BEARINGS

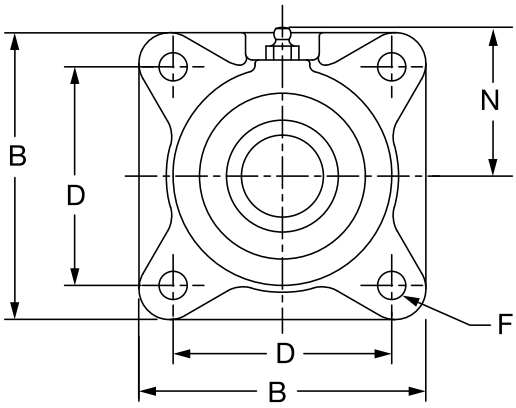

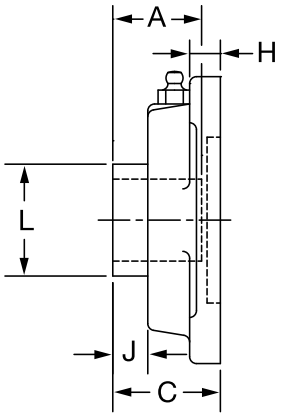

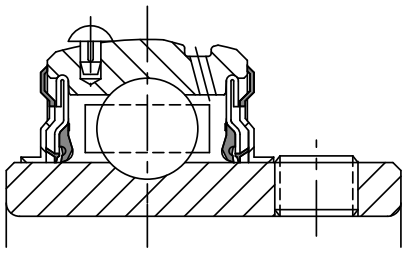

Series	Shaft Size	Standard Part No.	Description	Weight lbs kg	A	B	C	D	F	H	J	L	N
206	1	**076150**	F4B-SCMED-100	3.0	1.52	4.25	1.56	3.25	7/16	0.50	0.49	1.57	2.19
	25mm	***076313***	*F4B-SCMED-25M*	*1.3*	*38.6*	*108.0*	*39.6*	*82.6*	*M10*	*12.7*	*12.4*	*39.9*	*55.6*
207	1-3/16	**076151**	F4B-SCMED-103	4.1	1.71	4.75	1.75	3.63	1/2	0.56	0.53	1.84	2.44
	1-1/4	**@**	F4B-SCMED104	4.0									
	30mm	***076314***	*F4B-SCMED-30M*	*1.4*	*43.4*	*120.7*	*44.5*	*92.1*	*M12*	*14.2*	*13.5*	*46.7*	*62.0*
208	1-7/16	**076152**	F4B-SCMED-107	5.0	1.94	5.13	1.98	4.00	1/2	0.56	0.63	2.05	2.38
	35mm	***076315***	*F4B-SCMED-35M*	*2.1*	*49.3*	*130.3*	*50.3*	*101.6*	*M12*	*14.2*	*16.0*	*52.1*	*60.5*
209	1-1/2	**076153**	F4B-SCMED-108	6.1	1.94	5.38	1.99	4.13	1/2	0.63	0.59	2.22	2.75
	1-5/8	**@**	F4B-SCMED110L	6.1									
	40mm	***076316***	*F4B-SCMED-40M*	*2.7*	*49.3*	*136.7*	*50.5*	*104.8*	*M14*	*16.0*	*15.0*	*56.4*	*69.9*
210	1-11/16	**076154**	F4B-SCMED-111	7.1	1.94	5.63	2.02	4.38	1/2	0.63	0.55	2.43	2.88
	1-3/4	**076155**	F4B-SCMED-112	6.9									
	45mm	***076317***	*F4B-SCMED-45M*	*3.0*	*49.3*	*143.0*	*51.3*	*111.1*	*M16*	*16.0*	*14.0*	*61.7*	*73.2*
211	1-15/16	**076156**	F4B-SCMED-115	9.5	2.22	6.50	2.28	5.13	5/8	0.69	0.68	2.71	3.25
	2	**076157**	F4B-SCMED-200	9.3									
	50mm	***076318***	*F4B-SCMED-50M*	*4.1*	*56.4*	*165.1*	*57.9*	*130.2*	*M16*	*17.5*	*17.3*	*68.8*	*82.6*
212	2-3/16	**076158**	F4B-SCMED-203	11.3	2.31	6.88	2.38	5.63	5/8	0.69	0.66	2.97	3.50
	2-1/4	**076648**	F4B-SCMED-204	11.1									
	55mm	***076319***	*F4B-SCMED-55M*	*6.0*	*58.7*	*174.8*	*60.5*	*142.9*	*M16*	*17.5*	*16.8*	*75.4*	*88.9*
214	2-7/16	**076159**	F4B-SCMED-207	16.2	2.54	7.38	2.78	5.88	5/8	0.69	0.60	3.31	3.69
	2-1/2	**076160**	F4B-SCMED-208	16.0									
	65mm	***076320***	*F4B-SCMED-65M*	*7.3*	*64.5*	*187.5*	*70.6*	*149.2*	*M16*	*17.5*	*15.2*	*84.1*	*93.7*
215	2-11/16	**076161**	F4B-SCMED-211	18.3	2.33	7.75	2.88	6.00	3/4	1.00	0.63	3.62	3.88
	70mm	***076321***	*F4B-SCMED-70M*	*8.0*	*59.2*	*196.9*	*73.2*	*152.4*	*M18*	*25.4*	*16.0*	*91.9*	*98.6*
216	2-15/16	**076162**	F4B-SCMED-215	21.5	2.38	7.75	3.09	6.00	3/4	0.88	0.59	3.83	4.09
	3	**076163**	F4B-SCMED-300	21.2									
	75mm	***076322***	*F4B-SCMED-75M*	*9.4*	*60.5*	*196.9*	*78.5*	*152.4*	*M18*	*22.4*	*15.0*	*97.3*	*103.9*
218	3-7/16	**076164**	F4B-SCMED-307	28.0	2.56	8.44	3.38	6.75	3/4	1.00	0.60	4.35	4.63
	3-1/2	**076165**	F4B-SCMED-308	27.4									
	85mm	***076323***	*F4B-SCMED-85M*	*12.2*	*65.0*	*214.4*	*85.9*	*171.5*	*M18*	*25.4*	*15.2*	*110.5*	*117.6*

@ Assembled to order

DODGE®

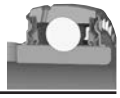

Extreme Duty Setscrew Ball Bearings
SCED NORMAL DUTY PILOTED FLANGE BEARINGS

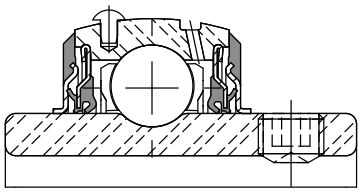

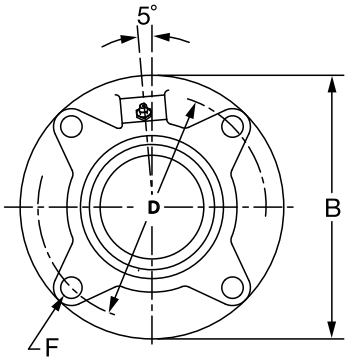

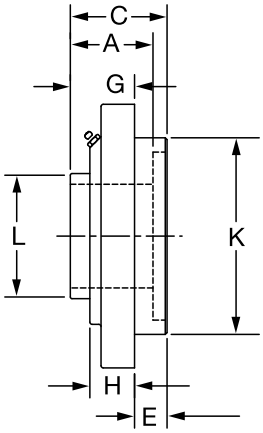

Series	Shaft Size	Part No.	Description	Weight lbs kg	A	B	C	D	E	F Bolt Dia.	G	H	K*	L
	1-1/16	@	FC-SCED-101	3.2	1.52	4.38	1.53	3.63	0.25	3/8	1.28	0.81	3.000/2.998	1.57
	1-1/8	@	FC-SCED-102	3.1										
206	1-3/16	**076063**	FC-SCED-103	3.0										
	1-1/4	**076064**	FC-SCED-104S	2.9										
	30mm	***076257***	*FC-SCED-30M*	*1.3*	*38.6*	*111.3*	*38.9*	*92.2*	*6.4*	*M10*	*32.5*	*20.6*	*76.20/76.15*	*39.9*
	1-1/4	**076065**	FC-SCED-104	4.2	1.71	5.00	1.78	4.13	0.38	3/8	1.40	0.84	3.375/3.373	1.84
	1-5/16	@	FC-SCED-105	4.1										
207	1-3/8	**076066**	FC-SCED-106	4.0										
	1-7/16	**076067**	FC-SCED-107	3.9										
	35mm	***076258***	*FC-SCED-35M*	*1.8*	*43.4*	*127.0*	*45.2*	*104.9*	*9.7*	*M10*	*35.6*	*21.3*	*85.73/85.67*	*46.7*
	1-1/2	**076068**	FC-SCED-108	4.6	1.94	5.25	1.98	4.38	0.44	7/16	1.54	0.89	3.625/3.623	2.05
208	1-5/8	@	FC-SCED-110	4.5										
	40mm	***076259***	*FC-SCED-40M*	*2.0*	*49.3*	*133.4*	*50.3*	*111.3*	*11.2*	*M12*	*39.1*	*22.6*	*92.08/92.02*	*52.1*
	1-5/8	@	FC-SCED-110L	5.6	1.94	5.75	1.95	4.75	0.44	1/2	1.51	0.91	4.000/3.998	2.22
209	1-11/16	**076069**	FC-SCED-111	5.5										
	1-3/4	**076070**	FC-SCED-112	5.4										
	45mm	***076260***	*FC-SCED-45M*	*2.4*	*49.3*	*146.1*	*49.5*	*120.7*	*11.2*	*M12*	*38.4*	*23.1*	*101.60/101.55*	*56.4*
	1-15/16	**076071**	FC-SCED-115	6.4	1.94	6.13	1.98	5.13	0.47	1/2	1.51	0.92	4.250/4.248	2.43
210	2	**076072**	FC-SCED-200	6.3										
	50mm	***076261***	*FC-SCED-50M*	*2.9*	*49.3*	*155.7*	*50.3*	*130.3*	*11.9*	*M12*	*38.4*	*23.4*	*107.95/107.90*	*61.7*
	2	**076163**	FC-SCMED-200	7.3	2.22	6.38	2.35	5.38	0.63	1/2	1.72	1.00	4.500/4.498	2.71
211	2-3/16	**076073**	FC-SCED-203	7.2										
	2-1/4	@	FC-SCED-204	7.1										
	55mm	***076262***	*FC-SCED-55M*	*3.3*	*56.4*	*162.1*	*59.7*	*136.7*	*16.0*	*M12*	*43.7*	*25.4*	*114.30/114.25*	*68.8*
	2-1/4	@	FC-SCMED-204	9.6	2.31	7.13	2.54	6.00	0.88	1/2	1.67	1.00	5.000/4.998	2.97
212	2-7/16	**076074**	FC-SCED-207	9.5										
	60mm	***076263***	*FC-SCED-60M*	*4.3*	*58.7*	*181.1*	*64.5*	*152.4*	*22.4*	*M12*	*42.4*	*25.4*	*127.00/126.95*	*75.4*
	2-1/2	**076176**	FC-SCMED-208	13.0	2.54	7.63	2.80	6.50	1.13	1/2	1.67	1.06	5.500/5.498	3.31
214	2-11/16	**076075**	FC-SCED-211	12.9										
	70mm	***076264***	*FC-SCED-70M*	*5.5*	*64.5*	*193.8*	*71.1*	*165.1*	*28.7*	*M12*	*42.4*	*26.9*	*139.70/139.65*	*84.1*

@ Assembled to order

FEATURES/BENEFITS PAGE B3-2	EASY SELECTION PAGE B3-3	SELECTION PAGE B3-5	ACCESSORIES PAGE B3-41

SELECTION/DIMENSIONS

DODGE®

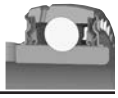

Extreme Duty Setscrew Ball Bearings
SCMED MEDIUM DUTY PILOTED FLANGE BEARINGS

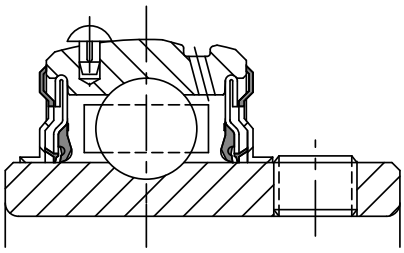

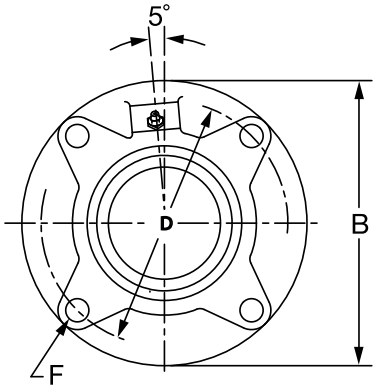

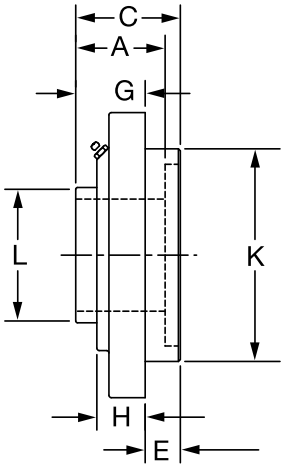

Series	Shaft Size	Part No.	Description	Weight lbs kg	A	B	C	D	E	F Bolt Dia.	G	H	K	L
206	1	**076166**	FC-SCMED-100	3.3	1.52	4.38	1.53	3.63	0.25	3/8	1.28	0.81	3.000/2.998	1.57
	25mm	***076324***	*FC-SCMED-25M*	*1.4*	38.6	111.3	38.9	92.2	6.4	M10	32.5	20.6	76.20/76.15	39.9
207	1-3/16	**076167**	FC-SCMED-103	4.2	1.71	5.00	1.78	4.13	0.38	3/8	1.40	0.84	3.375/3.373	1.84
	1-1/4	**076065**	FC-SCED-104	4.2										
	30mm	***076325***	*FC-SCMED-30M*	*1.9*	43.4	127.0	45.2	104.9	9.7	M10	35.6	21.3	85.73/85.67	46.7
208	1-7/16	**076168**	FC-SCMED-107	4.8	1.94	5.25	1.98	4.38	0.44	7/16	1.54	0.89	3.625/3.623	2.05
	35mm	***076326***	*FC-SCMED-35M*	*2.1*	49.3	133.4	50.3	111.3	11.2	M12	39.1	22.6	92.08/92.02	52.1
209	1-1/2	**076169**	FC-SCMED-108	5.6	1.94	5.75	1.95	4.75	0.44	1/2	1.51	0.91	4.000/3.998	2.22
	1-5/8	**@**	FC-SCED-110L	5.6										
	40mm	***076327***	*FC-SCMED-40M*	*2.5*	49.3	146.1	49.5	120.7	11.2	M12	38.4	23.1	101.60/101.55	56.4
210	1-11/16	**076170**	FC-SCMED-111	6.4	1.94	6.13	1.98	5.13	0.47	1/2	1.51	0.92	4.250/4.248	2.43
	1-3/4	**076171**	FC-SCMED-112	6.3										
	45mm	***076328***	*FC-SCMED-45M*	*2.9*	49.3	155.7	50.3	130.3	11.9	M12	38.4	23.4	107.95/107.90	61.7
211	1-15/16	**076172**	FC-SCMED-115	7.6	2.22	6.38	2.35	5.38	0.63	1/2	1.72	1.00	4.500/4.498	2.71
	2	**076173**	FC-SCMED-200	7.4										
	50mm	***076329***	*FC-SCMED-50M*	*3.4*	56.4	162.1	59.7	136.7	16.0	M12	43.7	25.4	114.30/114.25	68.8
212	2-3/16	**076174**	FC-SCMED-203	9.5	2.31	7.13	2.54	6.00	0.88	1/2	1.67	1.00	5.000/4.998	2.97
	2-1/4	**@**	FC-SCMED-204	9.8										
	55mm	***076330***	*FC-SCMED-55M*	*4.4*	58.7	181.1	64.5	152.4	22.4	M12	42.4	25.4	127.00/126.95	75.4
214	2-7/16	**076175**	FC-SCMED-207	13.2	2.54	7.63	2.80	6.50	1.13	1/2	1.67	1.06	5.500/5.498	3.31
	2-1/2	**076176**	FC-SCMED-208	13.0										
	65mm	***076331***	*FC-SCMED-65M*	*5.9*	64.5	193.8	71.1	165.1	28.7	M12	42.4	26.9	139.70/139.65	84.1
216	2-15/16	**076177**	FC-SCMED-215	18.8	2.38	8.75	3.02	7.50	1.25	5/8	1.77	1.19	6.375/6.373	3.83
	3	**076178**	FC-SCMED-300	18.6										
	75mm	***076332***	*FC-SCMED-75M*	*8.5*	60.5	222.3	76.7	190.5	31.8	M16	45.0	30.2	161.93/161.87	97.3
218	3-7/16	**076179**	FC-SCMED-307	28.7	2.56	10.25	3.33	8.38	1.13	3/4	2.21	1.63	7.375/7.373	4.35
	3-1/2	**076180**	FC-SCMED-308	28.5										
	85mm	***076333***	*FC-SCMED-85M*	*13.5*	65.0	260.4	84.6	212.9	28.6	M18	56.1	41.4	187.33/187.27	110.5

@ Assembled to order

DODGE®

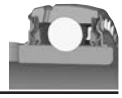

Extreme Duty Setscrew Ball Bearings

SCED NORMAL DUTY NARROW SLOT TAKE-UP BEARINGS

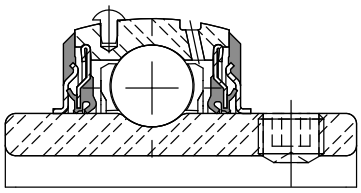

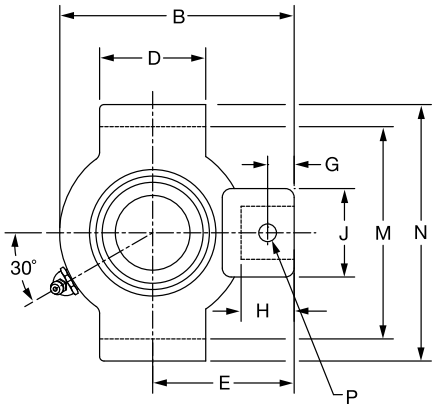

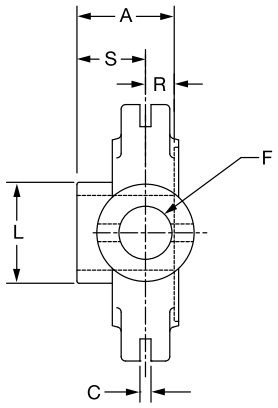

Series	Shaft Size	Part No.	Description	Weight lbs. kgs.	Take-Up Frame No. Ref.	A	B	C	D	E	F Screw Dia	G
204	1/2	@	NSTU-SCED-008	1.6	NS210	1.23	3.50	0.250	1.50	2.19	3/4	0.44
	5/8	@	NSTU-SCED-010	1.5								
	3/4	**076076**	NSTU-SCED-012	1.4								
	20mm	***076265***	*NSTU-SCED-20M*	*0.8*		*31.2*	*88.9*	*6.35*	*38.1*	*55.6*	*19.1*	*11.2*
205	7/8	@	NSTU-SCED-014	1.7	NS210	1.34	3.56	0.250	1.50	2.19	3/4	0.44
	15/16	@	NSTU-SCED-015	1.6								
	1	**076077**	NSTU-SCED-100	1.5								
	25mm	***076266***	*NSTU-SCED-25M*	*0.7*		*34.0*	*90.4*	*6.35*	*38.1*	*55.6*	*19.1*	*11.2*
206	1-1/16	@	NSTU-SCED-101	2.9	NS308	1.52	4.31	0.250	1.50	2.69	3/4	0.44
	1-1/8	**076078**	NSTU-SCED-102	2.8								
	1-3/16	**076079**	NSTU-SCED-103	2.7								
	1-1/4	**076080**	NSTU-SCED-104S	2.6								
	30mm	***076267***	*NSTU-SCED-30M*	*1.2*		*38.6*	*109.5*	*6.35*	*38.1*	*68.3*	*19.1*	*11.2*
207	1-1/4	**076081**	NSTU-SCED-104	2.8	NS308	1.71	4.50	0.250	2.50	2.69	3/4	0.50
	1-5/16	@	NSTU-SCED-105	2.7								
	1-3/8	**076082**	NSTU-SCED-106	2.6								
	1-7/16	**076083**	NSTU-SCED-107	2.5								
	35mm	***076268***	*NSTU-SCED-35M*	*1.2*		*43.4*	*114.3*	*6.35*	*63.5*	*68.3*	*19.1*	*12.7*

@ Assembled to order

See B15-9 for Take-Up Frames

Series	Shaft Size	H	J	L	M	N	P Pin Dia	R	S
204	1/2	0.88	1.38	1.12	2.635/2.605	3.13	0.32	0.50	0.73
	5/8								
	3/4								
	20mm	*22.4*	*35.1*	*28.4*	*66.93/66.17*	*79.5*	*8.1*	*12.7*	*18.5*
205	7/8	0.88	1.38	1.32	2.635/2.605	3.13	0.32	0.56	0.78
	15/16								
	1								
	25mm	*22.4*	*35.1*	*33.5*	*66.93/66.17*	*79.5*	*8.1*	*14.2*	*19.8*
206	1-1/16	0.88	1.38	1.57	2.635/2.605	3.13	0.32	0.58	0.94
	1-1/8								
	1-3/16								
	1-1/4								
	30mm	*22.4*	*35.1*	*39.9*	*66.93/66.17*	*79.5*	*8.1*	*14.7*	*23.9*
207	1-1/4	0.94	1.38	1.84	3.510/3.480	4.13	0.32	0.67	1.04
	1-5/16								
	1-3/8								
	1-7/16								
	35mm	*23.9*	*35.1*	*46.7*	*89.15/88.39*	*104.9*	*8.1*	*17.0*	*26.4*

SELECTION/DIMENSIONS

Extreme Duty Setscrew Ball Bearings

SCED NORMAL DUTY NARROW SLOT TAKE-UP BEARINGS

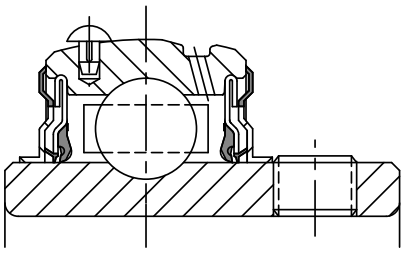

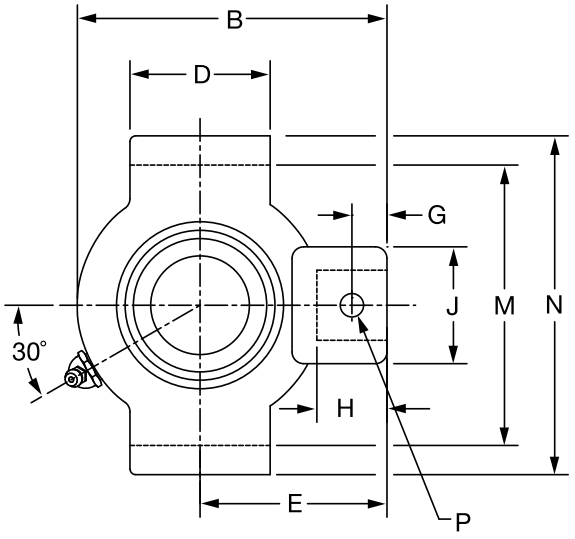

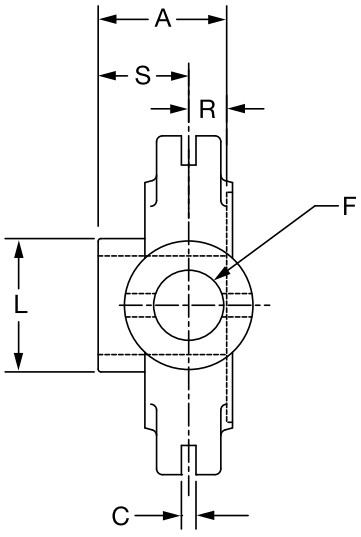

Series	Shaft Size	Standard Part No.	Description
208	1-1/2	**076084**	NSTU-SCED-108
	1-5/8	**@**	NSTU-SCED-110
	40mm	***076269***	*NSTU-SCED-40M*
209	1-5/8	**@**	NSTU-SCED-110L
	1-11/16	**076085**	NSTU-SCED-111
	1-3/4	**076086**	NSTU-SCED-112
	45mm	***076270***	*NSTU-SCED-45M*
210	1-15/16	**076087**	NSTU-SCED-115
	2	**076088**	NSTU-SCED-200
	50mm	***076271***	*NSTU-SCED-50M*
211	2	**076188**	NSTU-SCMED-200
	2-3/16	**076089**	NSTU-SCED-203
	2-1/4	**077462**	NSTU-SCED-204
	55mm	***076272***	*NSTU-SCED-55M*
212	2-1/4	**@**	NSTU-SCMED-204
	2-7/16	**076090**	NSTU-SCED-207
	60mm	***076273***	*NSTU-SCED-60M*

@ Assembled to order

See B15-9 for Take-Up Frames

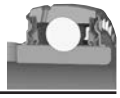

Extreme Duty Setscrew Ball Bearings

SCED NORMAL DUTY NARROW SLOT TAKE-UP BEARINGS

Series	Shaft Size	Weight lbs. kgs.	Take-Up Frame No. Ref.	A	B	C	D	E	F Screw Dia	G
208	1-1/2 1-5/8 *40mm*	4.7 4.6 *2.1*	NS400	1.94 49.3	5.38 136.7	0.313 7.95	3.00 76.2	3.25 82.6	7/8 22.2	0.66 16.8
209	1-5/8 1-11/16 1-3/4 *45mm*	4.9 4.8 4.7 *2.1*	NS400	*1.94* 49.3	*5.44* 138.2	*0.313* 7.95	*3.00* 76.2	*3.25* 82.6	*7/8* 22.2	*0.72* 18.3
210	1-15/16 2 *50mm*	4.9 4.8 *2.2*	NS400	1.94 49.3	5.50 139.7	0.313 7.95	3.00 76.2	3.25 82.6	7/8 22.2	0.59 15.0
211	2 2-3/16 2-1/4 *55mm*	6.8 6.6 6.5 *3.0*	NS407	*2.22* 56.4	*6.13* 155.7	*0.313* 7.95	*3.50* 88.9	*3.63* 92.2	*1* 25.4	*0.69* 17.5
212	2-1/4 2-7/16 *60mm*	8.7 8.4 *4.9*	NS415	2.31 *58.7*	6.69 *169.9*	0.313 *7.95*	3.75 *95.3*	3.88 *98.6*	1 *25.4*	0.69 *17.5*

Series	Shaft Size	H	J	L	M	N	P Pin Dia	R	S
208	1-1/2 1-5/8 *40mm*	1.16 29.5	1.63 41.4	2.05 52.1	4.015/3.985 101.98/101.22	4.75 120.7	0.38 9.7	0.75 19.1	1.19 30.2
209	1-5/8 1-11/16 1-3/4 *45mm*	*1.22* 31.0	*1.63* 41.4	*2.22* 56.4	*4.015/3.985* 101.98/101.22	*4.75* 120.7	*0.38* 9.7	*0.75* 19.1	*1.19* 30.2
210	1-15/16 2 *50mm*	1.09 27.7	1.63 41.4	2.43 61.7	4.015/3.985 101.98/101.22	4.75 120.7	0.38 9.7	0.75 19.1	1.19 30.2
211	2 2-3/16 2-1/4 *55mm*	*1.28* 32.5	*1.75* 44.5	*2.71* 68.8	*4.448/4.418* 112.98/112.22	*5.38* 136.7	*0.44* 11.2	*0.87* 22.1	*1.35* 34.3
212	2-1/4 2-7/16 *60mm*	1.28 *32.5*	1.63 *41.4*	2.97 *75.4*	4.947/4.917 *125.65/124.89*	5.75 *146.1*	0.44 *11.2*	0.90 *22.9*	1.41 *35.8*

FEATURES/BENEFITS PAGE B3-2	EASY SELECTION PAGE B3-3	SELECTION PAGE B3-5	ACCESSORIES PAGE B3-41

SELECTION/DIMENSIONS

Extreme Duty Setscrew Ball Bearings
SCMED MEDIUM DUTY NARROW SLOT TAKE-UP BEARINGS

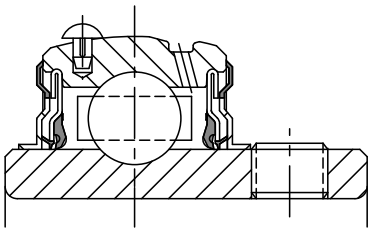

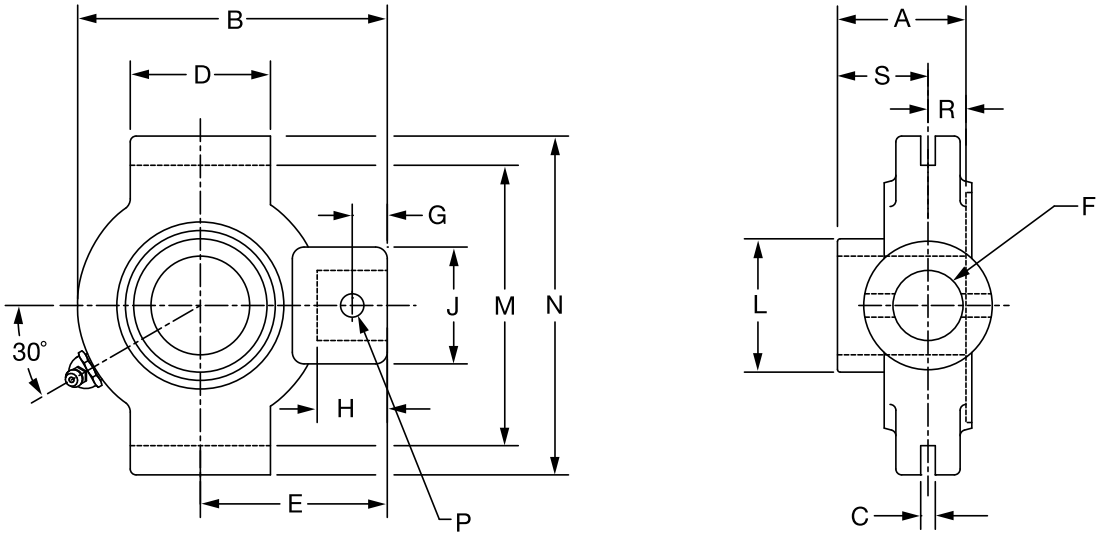

Series	Shaft Size	Part No.	Description
206	1	**076181**	NSTU-SCMED-100
	25mm	***076410***	*NSTU-SCMED-25M*
207	1-3/16	**076182**	NSTU-SCMED-103
	1-1/4	**076081**	NSTU-SCED-104
	30mm	***076411***	*NSTU-SCMED-30M*
208	1-7/16	**076183**	NSTU-SCMED-107
	35mm	***076412***	*NSTU-SCMED-35M*
209	1-1/2	**076184**	NSTU-SCMED-108
	1-5/8	**@**	NSTU-SCED-110L
	40mm	***076413***	*NSTU-SCMED-40M*
210	1-11/16	**076185**	NSTU-SCMED-111
	1-3/4	**076186**	NSTU-SCMED-112
	45mm	***076414***	*NSTU-SCMED-45M*
211	1-15/16	**076187**	NSTU-SCMED-115
	2	**076188**	NSTU-SCMED-200
	50mm	***076415***	*NSTU-SCMED-50M*
212	2-3/16	**076189**	NSTU-SCMED-203
	2-1/4	**@**	NSTU-SCMED-204
	55mm	***076416***	*NSTU-SCMED-55M*

@ Assembled to order

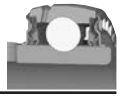

Extreme Duty Setscrew Ball Bearings
SCMED MEDIUM DUTY NARROW SLOT TAKE-UP BEARINGS

Series	Shaft Size	Weight lbs. kgs.	Take-Up Frame No. Ref.	A	B	C	D	E	F Screw Dia.	G
206	1	3.0	NS308	1.52	4.31	0.250	1.50	2.69	3/4	0.44
	25mm	*1.2*		*38.6*	*109.5*	*6.35*	*38.1*	*68.3*	*19.1*	*11.2*
207	1-3/16	2.9	NS308	1.71	4.50	0.250	2.50	2.69	3/4	0.50
	1-1/4	2.8								
	30mm	*1.3*		*43.4*	*114.3*	*6.35*	*63.5*	*68.3*	*19.1*	*12.7*
208	1-7/16	4.7	NS400	1.94	5.38	0.313	3.00	3.25	7/8	0.66
	35mm	*2.2*		49.3	136.7	7.95	76.2	82.6	22.2	16.8
209	1-1/2	5.0	NS400	1.94	5.44	0.313	3.00	3.25	7/8	0.72
	1-5/8	4.9								
	40mm	*2.3*		*49.3*	*138.2*	*7.95*	*76.2*	*82.6*	*22.2*	*18.3*
210	1-11/16	5.3	NS400	1.94	5.50	0.313	3.00	3.25	7/8	0.59
	1-3/4	5.2								
	45mm	*2.4*		*49.3*	*139.7*	*7.95*	*76.2*	*82.6*	*22.2*	*15.0*
211	1-15/16	7.0	NS407	2.22	6.13	0.313	3.50	3.63	1	0.69
	2	6.8								
	50mm	*3.2*		*56.4*	*155.7*	*7.95*	*88.9*	*92.2*	*25.4*	*17.5*
212	2-3/16	8.9	NS415	2.31	6.69	0.313	3.75	3.88	1	0.69
	2-1/4	8.7								
	55mm	*4.0*		*58.7*	*169.9*	*7.95*	*95.3*	*98.6*	*25.4*	*17.5*

Series	Shaft Size	H	J	L	M	N	P Pin Dia.	R	S
206	1	0.88	1.38	1.57	2.635/2.605	3.13	0.32	0.58	0.94
	25mm	*22.4*	*35.1*	*39.9*	*66.93/66.17*	*79.5*	*8.1*	*14.7*	*23.9*
207	1-3/16	0.94	1.38	1.84	3.510/3.480	4.13	0.32	0.67	1.04
	1-1/4								
	30mm	*23.9*	*35.1*	*46.7*	*89.15/88.39*	*104.9*	*8.1*	*17.0*	*26.4*
208	1-7/16	1.16	1.63	2.05	4.015/3.985	4.75	0.38	0.75	1.19
	35mm	*29.5*	*41.4*	*52.1*	*101.98/101.22*	*120.7*	*9.7*	*19.1*	*30.2*
209	1-1/2	1.22	1.63	2.22	4.015/3.985	4.75	0.38	0.75	1.19
	1-5/8								
	40mm	*31.0*	*41.4*	*56.4*	*101.98/101.22*	*120.7*	*9.7*	*19.1*	*30.2*
210	1-11/16	1.09	1.63	2.43	4.015/3.985	4.75	0.38	0.75	1.19
	1-3/4								
	45mm	*27.7*	*41.4*	*61.7*	*101.98/101.22*	*120.7*	*9.7*	*19.1*	*30.2*
211	1-15/16	1.28	1.75	2.71	4.448/4.418	5.38	0.44	0.87	1.35
	2								
	50mm	*32.5*	*44.5*	*68.8*	*112.98/112.22*	*136.7*	*11.2*	*22.1*	*34.3*
212	2-3/16	1.28	1.63	2.97	4.947/4.917	5.75	0.44	0.90	1.41
	2-1/4								
	55mm	*32.5*	*41.4*	*75.4*	*125.65/124.89*	*146.1*	*11.2*	*22.9*	*35.8*

FEATURES/BENEFITS PAGE B3-2 | EASY SELECTION PAGE B3-3 | SELECTION PAGE B3-5 | ACCESSORIES PAGE B3-41

SELECTION/DIMENSIONS

Extreme Duty Setscrew Ball Bearings
SCED NORMAL DUTY WIDE SLOT TAKE-UP BEARINGS

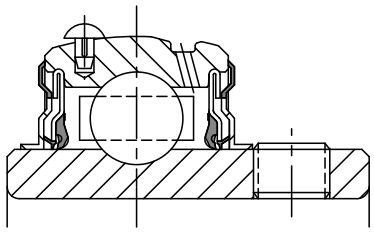

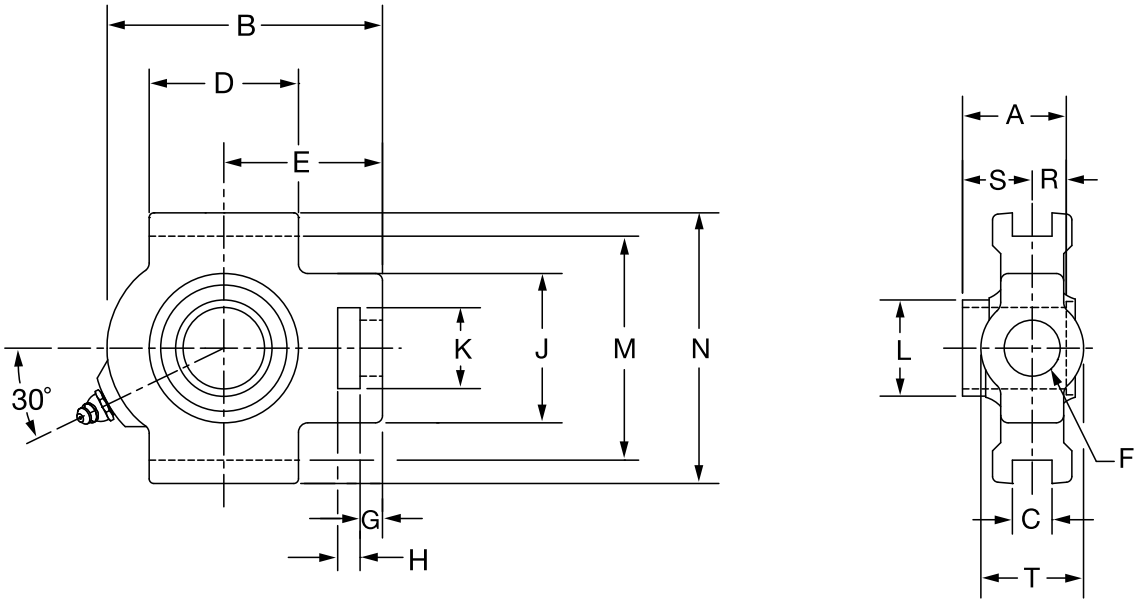

Series	Shaft Size	Standard Part No.	Description
204	1/2	@	WSTU-SCED-008
	5/8	@	WSTU-SCED-010
	3/4	**076091**	WSTU-SCED-012
	20mm	***076274***	*WSTU-SCED-20M*
205	7/8	@	WSTU-SCED-014
	15/16	@	WSTU-SCED-015
	1	**076092**	WSTU-SCED-100
	25mm	***076275***	*WSTU-SCED-25M*
206	1-1/16	@	WSTU-SCED-101
	1-1/8	**076093**	WSTU-SCED-102
	1-3/16	**076094**	WSTU-SCED-103
	1-1/4	**076095**	WSTU-SCED-104S
	30mm	***076276***	*WSTU-SCED-30M*
207	1-1/4	**076096**	WSTU-SCED-104
	1-5/16	@	WSTU-SCED-105
	1-3/8	**076097**	WSTU-SCED-106
	1-7/16	**076098**	WSTU-SCED-107
	35mm	***076277***	*WSTU-SCED-35M*
208	1-1/2	**076099**	WSTU-SCED-108
	1-5/8	@	WSTU-SCED-110
	40mm	***076278***	*WSTU-SCED-40M*

@ Assembled to order

DODGE®

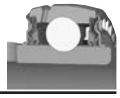

Extreme Duty Setscrew Ball Bearings

SCED NORMAL DUTY WIDE SLOT TAKE-UP BEARINGS

Series	Shaft Size	Weight lbs kg	Take-Up Frame Size	A	B	C	D	E	F Screw Dia.	G
204	1/2 5/8 3/4 *20mm*	2.1 2.0 1.9 *0.9*	WS300	1.23 *31.2*	3.69 *93.7*	0.531 *13.49*	2.00 *50.8*	2.38 *60.5*	5/8 *15.9*	0.38 *9.7*
205	7/8 15/16 1 *25mm*	2.2 2.1 2.0 *1.0*	WS300	1.34 *34.0*	3.81 *96.8*	0.531 *13.49*	2.00 *50.8*	2.44 *62.0*	5/8 *15.9*	0.38 *9.7*
206	1-1/16 1-1/8 1-3/16 1-1/4 *30mm*	3.1 3.0 2.9 2.8 *1.3*	WS308	1.52 *38.6*	4.38 *111.3*	0.531 *13.49*	2.25 *57.2*	2.75 *69.9*	3/4 *19.1*	0.38 *9.7*
207	1-1/4 1-5/16 1-3/8 1-7/16 *35mm*	3.8 3.7 3.6 3.5 *1.6*	WS308	1.71 *43.4*	4.87 *123.7*	0.531 *13.49*	2.50 *63.5*	3.06 *77.7*	3/4 *19.1*	0.50 *12.7*
208	1-1/2 1-5/8 *40mm*	6.1 6.0 *2.8*	WS400	1.94 *49.3*	5.69 *144.5*	0.688 *17.48*	3.25 *82.6*	3.50 *88.9*	1 *25.4*	0.63 *16.0*

Series	Shaft Size	H	J	K	L	M	N	R	S	T
204	1/2 5/8 3/4 *20mm*	0.63 *16.0*	2.00 *50.8*	1.25 *31.8*	1.12 *28.4*	2.985/3.015 *75.82/76.58*	3.63 *92.2*	0.50 *12.7*	0.73 *18.5*	1.38 *35.1*
205	7/8 15/16 1 *25mm*	0.63 *16.0*	2.00 *50.8*	1.31 *33.3*	1.32 *33.5*	2.985/3.015 *75.82/76.58*	3.63 *92.2*	0.56 *14.2*	0.78 *19.8*	1.38 *35.1*
206	1-1/16 1-1/8 1-3/16 1-1/4 *30mm*	0.63 *16.0*	2.19 *55.6*	1.44 *36.6*	1.57 *39.9*	3.480/3.510 *88.39/89.15*	4.13 *104.9*	0.58 *14.7*	0.94 *23.9*	1.63 *41.3*
207	1-1/4 1-5/16 1-3/8 1-7/16 *35mm*	0.63 *16.0*	2.50 *63.5*	1.44 *36.6*	1.84 *46.7*	3.480/3.510 *88.39/89.15*	4.13 *104.9*	0.67 *17.0*	1.04 *26.4*	1.63 *41.3*
208	1-1/2 1-5/8 *40mm*	0.75 *19.1*	3.25 *82.6*	1.94 *49.3*	2.05 *52.1*	3.985/4.015 *101.22/101.98*	4.50 *114.3*	0.75 *19.1*	1.19 *30.2*	1.94 *49.3*

FEATURES/BENEFITS PAGE B3-2	EASY SELECTION PAGE B3-3	SELECTION PAGE B3-5	ACCESSORIES PAGE B3-41

SELECTION/DIMENSIONS

Extreme Duty Setscrew Ball Bearings
SCED NORMAL DUTY WIDE SLOT TAKE-UP BEARINGS

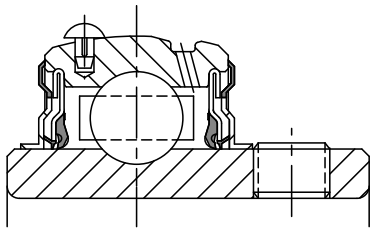

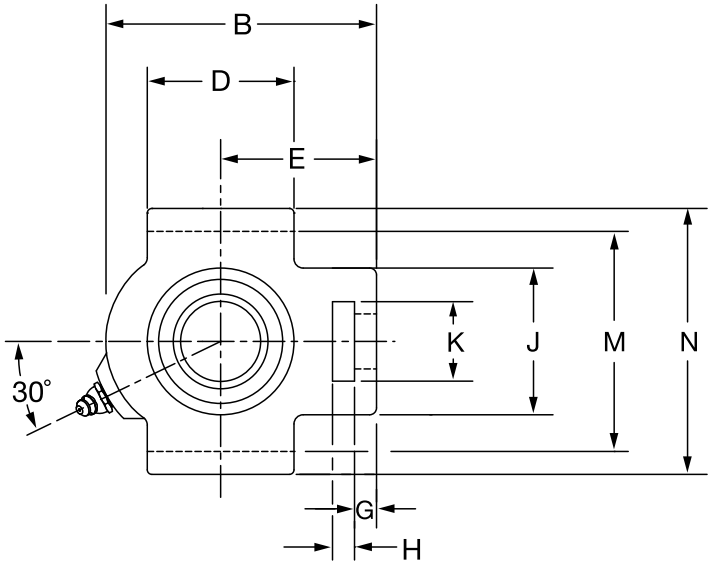

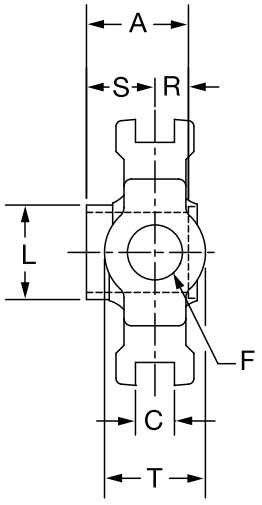

Series	Shaft Size	Standard Part No.	Description
209	1-5/8	@	WSTU-SCED-110L
	1-11/16	**076100**	WSTU-SCED-111
	1-3/4	**076101**	WSTU-SCED-112
	1-13/16	@	WSTU-SCED-113
	45mm	***076279***	*WSTU-SCED-45M*
210	1-15/16	**076102**	WSTU-SCED-115
	2	**076103**	WSTU-SCED-200
	50mm	***076280***	*WSTU-SCED-50M*
211	2	**076197**	WSTU-SCMED-200
	2-3/16	**076104**	WSTU-SCED-203
	2-1/4	@	WSTU-SCED-204
	55mm	***076281***	*WSTU-SCED-55M*
212	2-1/4	@	WSTU-SCMED-204
	2-7/16	**076105**	WSTU-SCED-207
	60mm	***076282***	*WSTU-SCED-60M*
214	2-1/2	**076200**	WSTU-SCMED-208
	2-11/16	**076106**	WSTU-SCED-211
	70mm	***076283***	*WSTU-SCED-70M*
215	2-15/16	**076107**	WSTU-SCED-215
	75mm	***076284***	*WSTU-SCED-75M*

@ Assembled to order

DODGE®

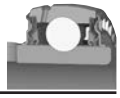

Extreme Duty Setscrew Ball Bearings

SCED NORMAL DUTY WIDE SLOT TAKE-UP BEARINGS

Series	Shaft Size	Weight lbs kg	Take-Up Frame Size	A	B	C	D	E	F Screw Dia.	G
	1-5/8	6.1		1.94	5.63	0.688	3.25	3.44	1	0.63
	1-11/16	6.0								
209	1-3/4	5.9	WS400							
	1-13/16	5.8								
	45mm	*2.7*		*49.3*	*143.0*	*17.48*	*82.6*	*87.4*	*25.4*	*16.0*
	1-15/16	6.4		1.94	5.82	0.688	3.38	3.56	1	0.63
210	2	6.2	WS400							
	50mm	*2.9*		*49.3*	*147.8*	*17.48*	*85.9*	*90.4*	*25.4*	*16.0*
	2	10.1		2.22	6.69	1.063	3.75	4.19	1-1/4	0.75
211	2-3/16	10.0	WS502							
	2-1/4	9.8								
	55mm	*4.5*		*56.4*	*169.9*	*27.00*	*95.3*	*106.4*	*31.8*	*19.1*
	2-1/4	11.2		2.31	7.50	1.063	4.00	4.69	1-1/4	0.75
212	2-7/16	10.8	WS502							
	60mm	*4.9*		*58.7*	*190.5*	*27.00*	*101.6*	*119.1*	*31.8*	*19.1*
	2-1/2	18.0		2.54	8.56	1.063	4.75	5.38	1-1/2	0.81
214	2-11/16	17.8	WS515							
	70mm	*8.0*		*64.5*	*217.4*	*27.0*	*120.7*	*136.7*	*38.1*	*20.6*
215	2-15/16	18.9	WS515	2.33	9.13	1.063	4.75	5.50	1-1/2	0.81
	75mm	*8.6*		*59.2*	*231.9*	*27.00*	*120.7*	*139.7*	*38.1*	*20.6*

Series	Shaft Size	H	J	K	L	M	N	R	S	T
	1-5/8	0.75	3.25	1.94	2.22	3.985/4.015	4.75	0.75	1.19	1.94
	1-11/16									
209	1-3/4									
	1-13/16									
	45mm	*19.1*	*82.6*	*49.3*	*56.4*	*101.22/101.98*	*120.7*	*19.1*	*30.2*	*49.3*
	1-15/16	0.75	3.25	1.94	2.43	3.985/4.015	4.75	0.75	1.19	1.94
210	2									
	50mm	*19.1*	*82.6*	*49.3*	*61.7*	*101.22/101.98*	*120.7*	*19.1*	*30.2*	*49.3*
	2	1.00	4.00	2.50	2.71	5.110/5.140	5.88	0.87	1.35	2.50
211	2-3/16									
	2-1/4									
	55mm	*25.4*	*101.6*	*63.5*	*68.8*	*129.79/130.56*	*149.4*	*22.1*	*34.3*	*63.5*
	2-1/4	1.25	4.00	2.50	2.97	5.110/5.140	5.88	0.90	1.41	2.50
212	2-7/16									
	60mm	*31.8*	*101.6*	*63.5*	*75.4*	*129.79/130.56*	*149.4*	*22.9*	*35.8*	*63.5*
	2-1/2	1.25	4.38	2.75	3.31	5.923/5.953	6.56	1.06	1.48	2.75
214	2-11/16									
	70mm	*31.8*	*111.3*	*69.9*	*84.1*	*150.44/151.21*	*166.6*	*26.9*	*37.6*	*69.9*
	2-15/16	1.25	4.38	2.75	3.62	5.923/5.953	6.69	0.86	1.47	2.75
215	*75mm*	*31.8*	*111.3*	*69.9*	*91.9*	*150.44/151.21*	*169.9*	*21.8*	*37.3*	*69.9*

FEATURES/BENEFITS PAGE B3-2 | EASY SELECTION PAGE B3-3 | SELECTION PAGE B3-5 | ACCESSORIES PAGE B3-41

SELECTION/DIMENSIONS

Extreme Duty Setscrew Ball Bearings
SCMED MEDIUM DUTY WIDE SLOT TAKE-UP BEARINGS

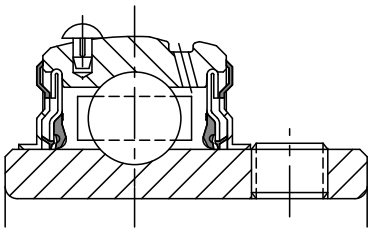

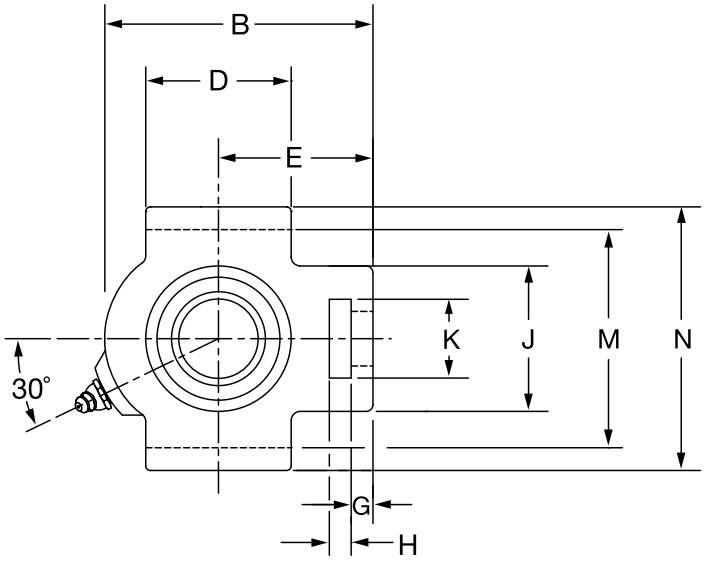

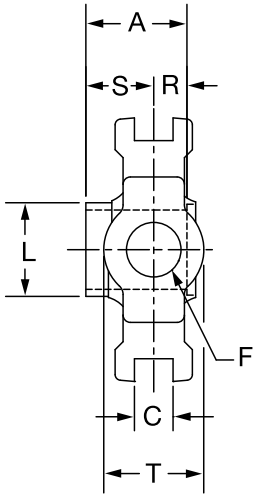

Series	Shaft Size	Part No.	Description
206	1	**076190**	WSTU-SCMED-100
	25mm	***076334***	*WSTU-SCMED-25M*
207	1-3/16	**076191**	WSTU-SCMED-103
	1-1/4	**076096**	WSTU-SCED-104
	30mm	***076335***	*WSTU-SCMED-30M*
208	1-7/16	**076192**	WSTU-SCMED-107
	35mm	***076336***	*WSTU-SCMED-35M*
209	1-1/2	**076193**	WSTU-SCMED-108
	40mm	***076337***	*WSTU-SCMED-40M*
210	1-11/16	**076194**	WSTU-SCMED-111
	1-3/4	**076195**	WSTU-SCMED-112
	45mm	***076338***	*WSTU-SCMED-45M*

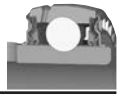

Extreme Duty Setscrew Ball Bearings

SCMED MEDIUM DUTY WIDE SLOT TAKE-UP BEARINGS

Series	Shaft Size	Weight lbs. kgs.	Take-Up Frame No. Ref.	A	B	C	D	E	F Screw Dia.	G
206	1	2.9	WS308	1.52	4.38	0.531	2.25	2.75	3/4	0.38
	25mm	*1.4*		*38.6*	*111.3*	*13.49*	*57.2*	*69.9*	*19.1*	*9.7*
207	1-3/16	3.9	WS308	1.71	4.87	0.531	2.50	3.06	3/4	0.50
	1-1/4	3.8								
	30mm	*1.7*		*43.4*	*123.7*	*13.49*	*63.5*	*77.7*	*19.1*	*12.7*
208	1-7/16	6.1	WS400	1.94	5.69	0.688	3.25	3.50	1	0.63
	35mm	*2.9*		*49.3*	*144.5*	*17.48*	*82.6*	*88.9*	*25.4*	*16.0*
209	1-1/2	6.0	WS400	1.94	5.63	0.688	3.25	3.44	1	0.63
	40mm	*2.8*		*49.3*	*143.0*	*17.48*	*82.6*	*87.4*	*25.4*	*16.0*
210	1-11/16	6.5	WS400	1.94	5.82	0.688	3.38	3.56	1	0.63
	1-3/4	6.4								
	45mm	*3.0*		*49.3*	*147.8*	*17.48*	*85.9*	*90.4*	*25.4*	*16.0*

Series	Shaft Size	H	J	K	L	M	N	R	S	T
206	1	0.63	2.19	1.44	1.57	3.480/3.510	4.13	0.58	0.94	1.63
	25mm	*16.0*	*55.6*	*36.6*	*39.9*	*88.39/89.15*	*104.9*	*14.7*	*23.9*	*41.3*
207	1-3/16	0.63	2.50	1.44	1.84	3.480/3.510	4.13	0.67	1.04	1.63
	1-1/4									
	30mm	*16.0*	*63.5*	*36.6*	*46.7*	*88.39/89.15*	*104.9*	*17.0*	*26.4*	*41.3*
208	1-7/16	0.75	3.25	1.94	2.05	3.985/4.015	4.50	0.75	1.19	1.94
	35mm	*19.1*	*82.6*	*49.3*	*52.1*	*101.22/101.98*	*114.3*	*19.1*	*30.2*	*49.3*
209	1-1/2	0.75	3.25	1.94	2.22	3.985/4.015	4.75	0.75	1.19	1.94
	40mm	*19.1*	*82.6*	*49.3*	*56.4*	*101.22/101.98*	*120.7*	*19.1*	*30.2*	*49.3*
210	1-11/16	0.75	3.25	1.94	2.43	3.985/4.015	4.75	0.75	1.19	1.94
	1-3/4									
	45mm	*19.1*	*82.6*	*49.3*	*61.7*	*101.22/101.98*	*120.7*	*19.1*	*30.2*	*49.3*

FEATURES/BENEFITS PAGE B3-2 | EASY SELECTION PAGE B3-3 | SELECTION PAGE B3-5 | ACCESSORIES PAGE B3-41

SELECTION/DIMENSIONS

Extreme Duty Setscrew Ball Bearings
SCMED MEDIUM DUTY WIDE SLOT TAKE-UP BEARINGS

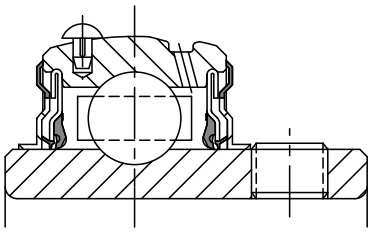

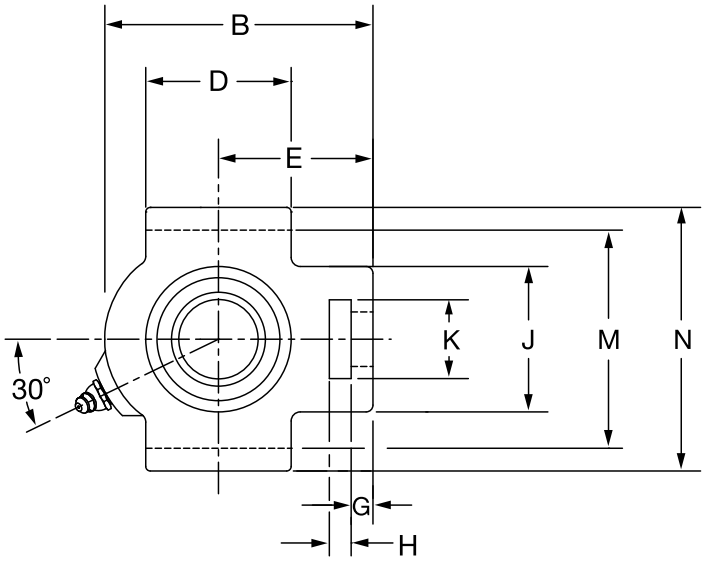

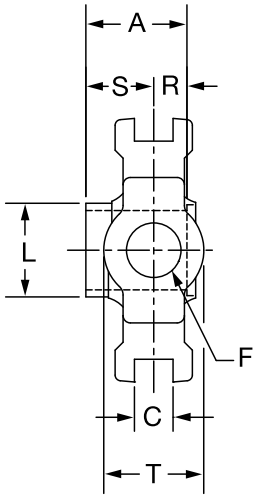

Series	Shaft Size	Part No.	Description
211	1-15/16	**076196**	WSTU-SCMED-115
	2	**076197**	WSTU-SCMED-200
	50mm	***076339***	*WSTU-SCMED-50M*
212	2-3/16	**076198**	WSTU-SCMED-203
	2-1/4	**@**	WSTU-SCMED-204
	55mm	***076340***	*WSTU-SCMED-55M*
214	2-7/16	**076199**	WSTU-SCMED-207
	2-1/2	**076200**	WSTU-SCMED-208
	65mm	***076341***	*WSTU-SCMED-65M*
215	2-11/16	**076201**	WSTU-SCMED-211
	70mm	***076342***	WSTU-SCMED-70M
216	2-15/16	**076202**	WSTU-SCMED-215
	3	**076203**	WSTU-SCMED-300
	75mm	***076343***	*WSTU-SCMED-75M*

@ Assembled to order

DODGE®

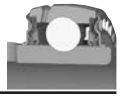

Extreme Duty Setscrew Ball Bearings

SCMED MEDIUM DUTY WIDE SLOT TAKE-UP BEARINGS

Series	Shaft Size	Weight lbs. kgs.	Take-Up Frame No. Ref.	A	B	C	D	E	F Screw Dia.	G
211	1-15/16 2 *50mm*	10.1 10.2 *4.7*	WS502	2.22 *56.4*	6.69 *169.9*	1.063 *27.00*	3.75 *95.3*	4.19 *106.4*	1-1/4 *31.8*	0.75 *19.1*
212	2-3/16 2-1/4 *55mm*	11.4 11.2 *5.1*	WS502	2.31 *58.7*	7.50 *190.5*	1.063 *27.00*	4.00 *101.6*	4.69 *119.1*	1-1/4 *31.8*	0.75 *19.1*
214	2-7/16 2-1/2 *65mm*	18.2 18.0 *8.1*	WS515	2.54 *64.5*	8.56 *217.4*	1.063 *27.0*	4.75 *120.7*	5.38 *136.7*	1-1/2 *38.1*	0.81 *20.6*
215	2-11/16 *70mm*	19.0 *8.9*	WS515	2.33 *59.2*	9.13 *231.9*	1.063 *27.00*	4.75 *120.7*	5.50 *139.7*	1-1/2 *38.1*	0.81 *20.6*
216	2-15/16 3 *75mm*	21.7 21.5 *9.5*	WS608	2.38 *60.5*	9.13 *231.6*	1.063 *27.00*	4.75 *120.7*	2.38 *60.5*	1-1/2 *38.1*	0.81 *20.6*

Series	Shaft Size	H	J	K	L	M	N	R	S	T
211	1-15/16 2 *50mm*	1.00 *25.4*	4.00 *101.6*	2.50 *63.5*	2.71 *68.8*	5.110/5.140 *129.79/130.56*	5.88 *149.4*	0.87 *22.1*	1.35 *34.3*	2.50 *63.5*
212	2-3/16 2-1/4 *55mm*	1.25 *31.8*	4.00 *101.6*	2.50 *63.5*	2.97 *75.4*	5.110/5.140 *129.79/130.56*	5.88 *149.4*	0.90 *22.9*	1.41 *35.8*	2.50 *63.5*
214	2-7/16 2-1/2 *65mm*	1.25 *31.8*	4.38 *111.3*	2.75 *69.9*	3.31 *84.1*	5.923/5.953 *150.44/151.21*	6.56 *166.6*	1.06 *26.9*	1.48 *37.6*	2.75 *69.9*
215	2-11/16 *70mm*	1.25 *31.8*	4.38 *111.3*	2.75 *69.9*	3.62 *91.9*	5.923/5.953 *150.44/151.21*	6.69 *169.9*	0.86 *21.8*	1.47 *37.3*	2.75 *69.9*
216	2-15/16 3 *75mm*	1.25 *31.8*	4.38 *111.3*	2.75 *69.9*	3.83 *97.3*	6.485/6.515 *164.72/165.48*	7.25 *184.2*	0.88 *22.4*	1.50 *38.1*	2.75 *69.9*

SELECTION/DIMENSIONS

Extreme Duty Setscrew Ball Bearings
SCED NORMAL DUTY BEARING INSERTS

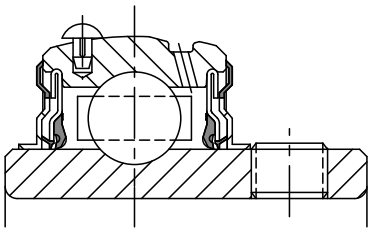

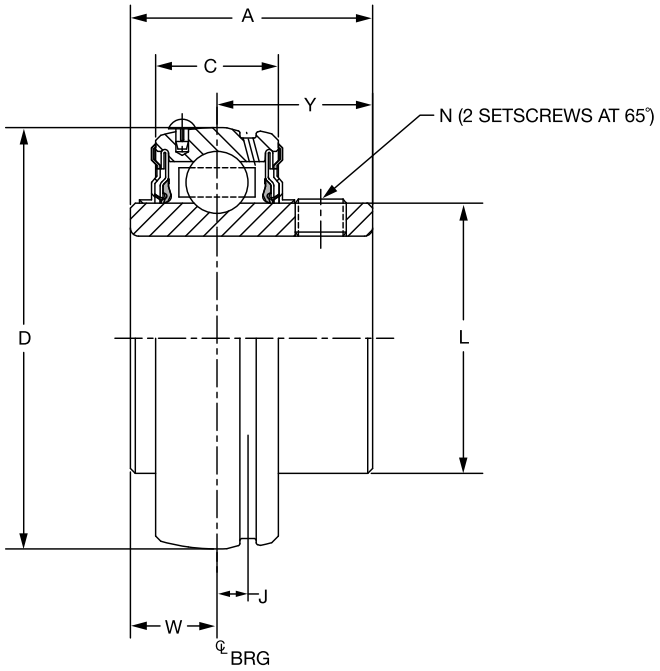

Series	Shaft Size	Standard Insert Part No.	Description	Weight Lbs *kg*	A	C	D	J	L	N	W	Y
204	1/2	@	INS-SCED-008L	.38	1.23	0.58	1.8504	0.15	1.12	1/4-28	0.50	0.73
	5/8	@	INS-SCED-010L	.35								
	3/4	**076108**	INS-SCED-012	.32								
	20mm	@	*INS-SCED-20M*	*.16*	31.2	14.7	47.000	3.8	28.4	M6x1	12.7	18.5
205	7/8	@	INS-SCED-014	.43	1.34	0.59	2.0472	0.16	1.32	1/4-28	0.56	0.78
	15/16	@	INS-SCED-015	.40								
	1	**076109**	INS-SCED-100	.37								
	25mm	***076286***	*INS-SCED-25M*	*.18*	34.0	15.0	52.000	4.1	33.5	M6x1	14.2	19.8
206	1-1/16	@	INS-SCED-101	.67	*1.52*	*0.69*	*2.4409*	*0.16*	*1.57*	*5/16-24*	*0.58*	*0.94*
	1-1/8	**076110**	INS-SCED-102	.63								
	1-3/16	**076111**	INS-SCED-103	.60								
	1-1/4	**076112**	INS-SCED-104S	.58								
	30mm	***076287***	*INS-SCED-30M*	*.27*	38.6	17.5	62.000	4.1	39.9	M8x1.25	14.7	23.9
207	1-1/4	**076113**	INS-SCED-104	1.02	1.71	0.75	2.8346	0.20	1.84	5/16-24	0.67	1.04
	1-5/16	@	INS-SCED-105	.97								
	1-3/8	**076114**	INS-SCED-106	.92								
	1-7/16	**076115**	INS-SCED-107	.86								
	35mm	***076288***	*INS-SCED-35M*	*.44*	43.4	19.1	72.000	5.1	46.7	M8x1.25	17.0	26.4

@ Assembled to order

DODGE®

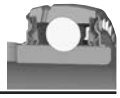

Extreme Duty Setscrew Ball Bearings
SCED NORMAL DUTY BEARING INSERTS

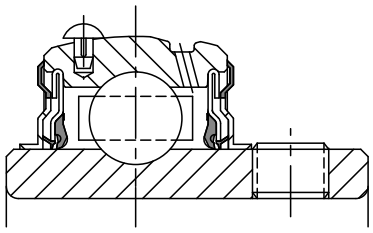

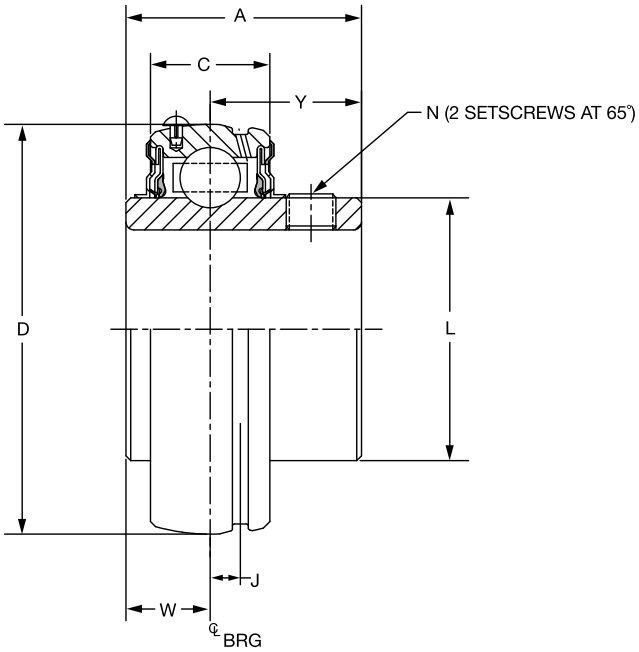

Series Size	Shaft	Standard Insert Part No.	Description	Weight Lbs kg	A	C	D	J	L	N	W	Y
	1-1/2	**076116**	INS-SCED-108	1.27	1.94	0.87	3.1496	0.22	2.05	5/16-24	0.75	1.19
208	1-5/8	@	INS-SCED-110	1.13								
	40mm	***076289***	*INS-SCED-40M*	*0.51*	*49.3*	*22.1*	*80.000*	*5.6*	*52.1*	*M8x1.25*	*19.1*	*30.2*
	1-5/8	@	INS-SCED-110L	1.49	1.94	0.87	3.3465	0.25	2.22	5/16-24	0.75	1.19
	1-11/16	**076117**	INS-SCED-111	1.43								
209	1-3/4	**076118**	INS-SCED-112	1.36								
	1-13/16	@	INS-SCED-113	1.30								
	45mm	***076290***	*INS-SCED-45M*	*0.62*	49.3	22.1	85.000	6.4	56.4	M8x1.25	19.1	30.2
	1-15/16	**076119**	INS-SCED-115	1.48	1.94	0.87	3.5433	0.25	2.43	3/8-24	0.75	1.19
210	2	**076120**	INS-SCED-200	1.39								
	50mm	***076291***	*INS-SCED-50M*	*0.67*	49.3	22.1	90.000	6.4	61.7	M10x1.5	19.1	30.2
	2	**076211**	INS-SCMED-200	2.26	*2.22*	*0.94*	*3.9370*	*0.25*	*2.71*	*3/8-24*	*0.87*	*1.35*
211	2-3/16	**076121**	INS-SCED-203	1.97								
	2-1/4	@	INS-SCED-204	1.87								
	55mm	***076292***	*INS-SCED-55M*	*0.89*	56.4	23.9	100.000	6.4	68.8	M10x1.5	22.1	34.3
	2-1/4	@	INS-SCMED-204	2.85	2.31	1.02	4.3307	0.25	2.97	3/8-24	0.90	1.41
212	2-7/16	**076122**	INS-SCED-207	2.49								
	60mm	***076293***	*INS-SCED-60M*	*1.13*	*58.7*	*25.9*	*110.000*	*6.4*	*75.4*	*M10x1.5*	*22.9*	*35.8*
	2-1/2	**076214**	INS-SCMED-208	4.25	2.54	1.10	4.9213	0.26	3.31	3/8-24	1.06	1.48
214	2-11/16	**076123**	INS-SCED-211	3.60								
	70mm	***076294***	*INS-SCED-70M*	*1.63*	64.5	27.9	125.000	6.6	84.1	M10x1.5	26.9	37.6
215	2-15/16	**076124**	INS-SCED-215	3.86	2.33	1.14	5.1181	0.28	3.62	3/8-24	0.86	1.47
	75mm	***076295***	*INS-SCED-75M*	***1.75***	*59.2*	*29.0*	*130.000*	*7.1*	*91.9*	*M10x1.5*	*21.8*	*37.3*
218	*90mm*	*@*	*INS-SCED-90M*	*3.3*	65.0	34.0	160.000	7.6	110.5	M10x1.5	24.4	40.6

@ Assembled to order. * 20 piece minimum

FEATURES/BENEFITS PAGE B3-2	EASY SELECTION PAGE B3-3	SELECTION PAGE B3-5	ACCESSORIES PAGE B3-41

SELECTION/DIMENSIONS

DODGE®

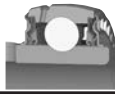

Extreme Duty Setscrew Ball Bearings
SCMED MEDIUM DUTY BEARING INSERTS

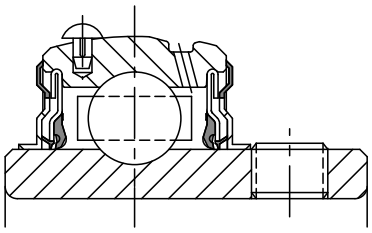

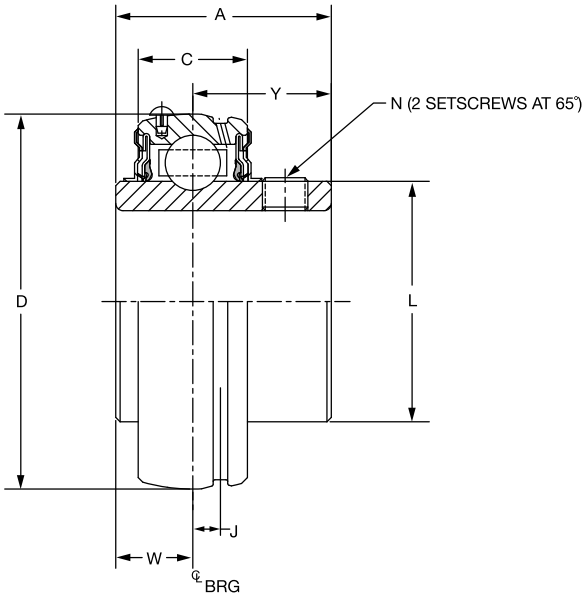

Series	Shaft Size	Standard Insert Part No.	Description	Weight Lbs. kg	A	C	D	J	L	N	W	Y
206	1	**076204**	INS-SCMED-100	0.71	1.52	0.69	2.4409	0.16	1.57	5/16-24	0.58	0.94
	25mm	***076344***	*INS-SCMED-25M*	*0.32*	*38.6*	*17.5*	*62.000*	*4.1*	*39.9*	*M8x1.25*	*14.7*	*23.9*
207	1-3/16	**076205**	INS-SCMED-103	1.07	1.71	0.75	2.8346	0.20	1.84	5/16-24	0.67	1.04
	1-1/4	**076113**	INS-SCED-104	1.02								
	30mm	***076287***	*INS-SCED-30M*	*0.53*	*43.4*	*19.1*	*72.000*	*5.1*	*46.7*	*M8x1.25*	*17.0*	*26.4*
208	1-7/16	**076206**	INS-SCMED-107	1.32	1.94	0.87	3.1496	0.22	2.05	5/16-24	0.75	1.19
	1-1/2#	**076116**	INS-SCED-108	1.27								
	35mm	***076346***	*INS-SCMED-35M*	*0.60*	*49.3*	*22.1*	*80.000*	*5.6*	*52.1*	*M8x1.25*	*19.1*	*30.2*
209	1-1/2	**076207**	INS-SCMED-108	1.62	1.94	0.87	3.3465	0.25	2.22	5/16-24	0.75	1.19
	1-5/8	**@**	INS-SCED-110L	1.49								
	40mm	***076347***	*INS-SCMED-40M*	*0.71*	*49.3*	*22.1*	*85.000*	*6.4*	*56.4*	*M8x1.25*	*19.1*	*30.2*
210	1-11/16	**076208**	INS-SCMED-111	1.82	1.94	0.87	3.5433	0.25	2.43	3/8-24	0.75	1.19
	1-3/4	**076209**	INS-SCMED-112	1.74								
	45mm	***076348***	*INS-SCMED-45M*	*0.76*	*49.3*	*22.1*	*90.000*	*6.4*	*61.7*	*M10x1.5*	*19.1*	*30.2*
211	1-15/16	**076210**	INS-SCMED-115	2.36	2.22	0.94	3.9370	0.25	2.71	3/8-24	0.87	1.35
	2	**076211**	INS-SCMED-200	2.26								
	50mm	***076349***	*INS-SCMED-50M*	*1.03*	*56.4*	*23.9*	*100.000*	*6.4*	*68.8*	*M10x1.5*	*22.1*	*34.3*
212	2-3/16	**076212**	INS-SCMED-203	2.97	2.31	1.02	4.3307	0.25	2.97	3/8-24	0.90	1.41
	2-1/4	**@**	INS-SCMED-204	2.85								
	55mm	***076350***	*INS-SCMED-55M*	*1.27*	*58.7*	*25.9*	*110.000*	*6.4*	*75.4*	*M10x1.5*	*22.9*	*35.8*
214	2-7/16	**076213**	INS-SCMED-207	4.39	2.54	1.10	4.9213	0.26	3.31	3/8-24	1.06	1.48
	2-1/2	**076214**	INS-SCMED-208	4.25								
	60mm	***076351***	*INS-SCMED-65M*	*1.86*	*64.5*	*27.9*	*125.000*	*6.6*	*84.1*	*M10x1.5*	*26.9*	*37.6*
215	2-11/16	**076215**	INS-SCMED-211	4.49	2.33	1.14	5.1181	0.28	3.62	3/8-24	0.86	1.47
	70mm	***076352***	*INS-SCMED-70M*	*1.98*	*59.2*	*29.0*	*130.000*	*7.1*	*91.9*	*M10x1.5*	*21.8*	*37.3*
216	2-15/16	**076216**	INS-SCMED-215	5.54	2.38	1.18	5.5118	0.29	3.83	3/8-24	0.88	1.50
	3	**076217**	INS-SCMED-300	5.52								
	75mm	***076353***	*INS-SCMED-75M*	*2.51*	*60.5*	*30.0*	*140.000*	*7.4*	*97.3*	*M10x1.5*	*22.4*	*38.1*
218	3-7/16	**076218**	INS-SCMED-307	7.35	2.56	1.34	6.2992	0.30	4.35	3/8-24	0.96	1.60
	3-1/2	**076219**	INS-SCMED-308	7.33								
	85mm	***076354***	*INS-SCMED-85M*	*3.33*	*65.0*	*34.0*	*160.000*	*7.6*	*110.5*	*M10x1.5*	*24.4*	*40.6*

@ Assembled to order # SCM Piloted Flange Only

FEATURES/BENEFITS PAGE B3-2 | EASY SELECTION PAGE B3-3 | SELECTION PAGE B3-5 | ACCESSORIES PAGE B3-41

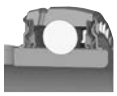

Extreme Duty Ball Bearing
END CLOSURES

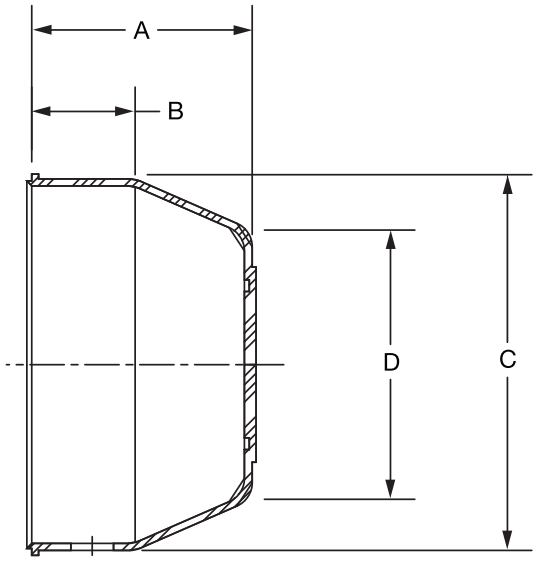

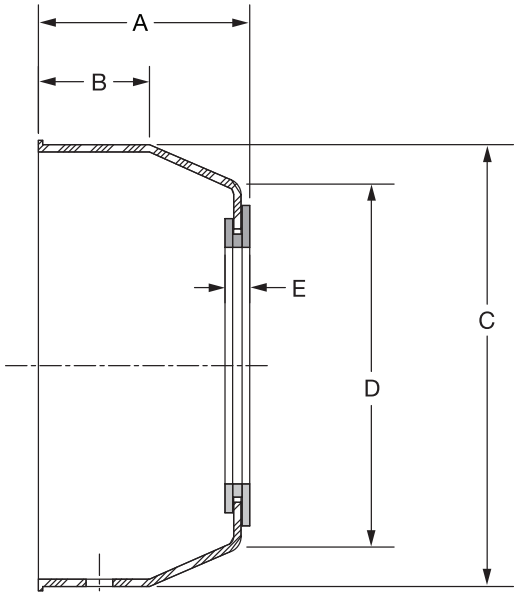

Series	Closed End Closure	
	Part Number	Description
204	**128280**	EC-204-Y
205	**128281**	EC-205-Y
206	**128282**	EC-206-Y
207	**128283**	EC-207-Y
208	**128284**	EC-208-Y
209	**128285**	EC-209-Y
210	**128286**	EC-210-Y
211	**128277**	EC-211-Y
212	**128278**	EC-212-Y

Open End Closure		
Shaft Size	Part Number	Description
3/4	**128350**	ECO-012-Y
20mm	**128363**	ECO-20M-Y
1	**128351**	ECO-100-Y
25mm	**128364**	ECO-25M-Y
1-3/16	**128352**	ECO-103-Y
1-1/4	**128353**	ECO-104S-Y
30mm	**128365**	ECO-30M-Y
1-1/4	**128355**	ECO-104-Y
1-7/16	**128354**	ECO-107-Y
35mm	**128366**	ECO-35M-Y
1-1/2	**128356**	ECO-108-Y
40mm	**128367**	ECO-40M-Y
1-11/16	**128357**	ECO-111-Y
45mm	**128368**	ECO-45M-Y
1-15/16	**128358**	ECO-115-Y
50mm	**128369**	ECO-50M-Y

ACCESSORIES

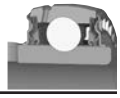

Extreme Duty

Open Cover Extreme Duty Dimensions

Series	Shaft Size	A	B	C	D	E
204	.75	1.19	0.53	1.91	1.38	0.19
	20mm	*30.2*	*13.5*	*48.4*	*35.1*	*4.9*
205	1	1.25	0.53	2.17	1.61	0.19
	25mm	*31.8*	*13.5*	*55.1*	*40.9*	*4.9*
206	1-3/16	1.39	0.56	2.50	0.97	0.19
	1.25					
	30mm	*35.3*	*14.2*	*63.5*	*50.0*	*4.9*
207	1.25	1.53	0.69	2.91	2.31	0.19
	1-7/16					
	35mm	*38.9*	*17.5*	*73.9*	*58.9*	*4.9*
208	1.50	1.59	0.69	3.31	2.77	0.20
	40mm	*40.6*	*17.5*	*84.1*	*70.1*	*5.1*
209	1-11/16	1.66	0.72	3.50	2.88	0.20
	45mm	*41.9*	*18.3*	*88.9*	*72.9*	*5.1*
210	1-15/16	1.72	0.91	3.63	3.00	0.20
	50mm	*43.7*	*23.1*	*91.4*	*76.2*	*5.1*

Closed Cover Extreme Duty Dimensions

Series	A	B	C	D
204	1.13	0.53	1.91	1.38
	28.7	13.5	48.4	35.1
205	0.19	0.53	2.17	1.61
	30.2	13.5	55.1	40.9
206	1.33	0.56	2.50	0.97
	33.8	14.2	63.5	50.0
207	1.47	0.69	2.91	2.31
	37.3	17.5	73.9	58.9
208	1.55	0.69	3.31	2.77
	39.1	17.5	84.1	70.1
209	1.59	0.72	3.50	2.88
	40.4	18.3	88.9	72.9
210	1.66	0.91	3.62	3
	42.2	23.1	91.4	76.2
211	1.80	0.97	3.94	3.30
	45.5	24.6	100.1	83.6
212	1.91	1.00	4.38	3.66
	48.3	25.4	111.3	92.7

CONTENTS

Setscrew Ball Bearings

Features / Benefits B4-3
How to Order / Nomenclature B4-5
Selection B4-6
Selection/Dimensions
- Pillow Blocks
  - SC - Normal Duty B4-12
  - SCAH Air Handling Normal Duty B4-16
  - SCB Normal Duty B4-20
  - SCBAH Air Handling Normal Duty B4-22
  - SCH-E Expansion and Non-Expansion B4-24
  - SCM Medium Duty B4-26
  - SCMAH Air Handling Medium Duty B4-28
  - SL Light Duty B4-30
  - SC Normal Duty Tapped B4-32
- Flanges
  - 2-Bolt Flange B4-34
  - 3-Bolt Flange B4-50
  - 4-Bolt Flange B4-54
  - Piloted Flange B4-66
- Take-Ups
  - SC-Normal Duty Narrow Slot B4-70
  - SC-Normal Duty Wide Slot B4-74
  - SCM-Medium Duty Wide Slot B4-78
  - Type G Normal Duty Top Angle B4-82
- Hanger Bearings
  - SC Normal Duty Screw Conveyor B4-84
  - SC Normal Duty B4-86

SC Normal Duty Cylindrical Units
- Inserts
  - SC - Normal Duty Inserts B4-88
  - SCH Expansion and Non-Expansion B4-92
  - SCM Medium Duty B4-94
  - LF/LFT/SL Bearing Inserts B4-96

Modification/Accessories B4-98
Related Products
- High Temperature Ball Bearings B4-99
- End Closures B4-102

Part Number Index INDEX-1
Key Word Index INDEX-69

CONTENTS





Setscrew Ball Bearings

For over 70 years, DODGE has been talking to mounted bearing users and listening to their needs. This experience lead to the design of the optimum mounted ball bearing. A state-of-the-art facility was built to manufacture the new DODGE design.

The result is the DODGE SC/SCM/SL line. Its premium features make it the most reliable setscrew mounted ball bearing on the market and provides the user unmatched quality and true total value.

- Light Duty Narrow Inner Ring (SL)
- Normal Duty Wide Inner Ring (SC)
- Medium Duty Wide Inner Ring (SCM)
- Wide Variety of Housing Configurations
- Available in 1/2 to 3-1/2 (17 to 90mm) Bore Sizes
- Seal Options:
  - DUALGUARD seal
  - ProGuard Seal
  - Rubberized flinger
  - Low friction labyrinth on SC/ SCM
- Other Options:
  - FDA/USDA lubricant and other special lubricants
  - High temperature SC/SCM designed for temperatures from 225° F to 400° F. Factory assembled to order.

For application assistance, contact DODGE Engineering

Phone 864-284-5700

Fax 864-281-2317

DODGE End Covers

Available from stock to fit SC, SCM and VSC mounted units, these end covers are designed for added protection from contaminants as well as for OSHA requirements. Covers are OSHA yellow.

Superior Locking Forces



The DODGE SC/SCM/SL line uses 65° design which offers an optimum balance between locking force and inner ring stress.

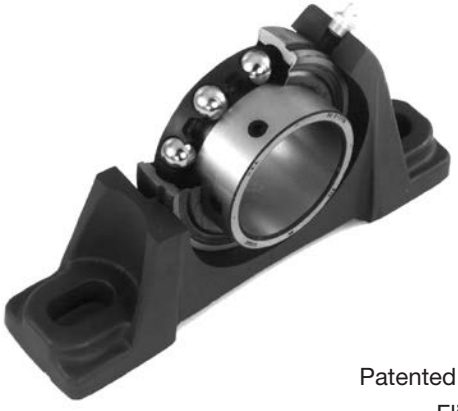

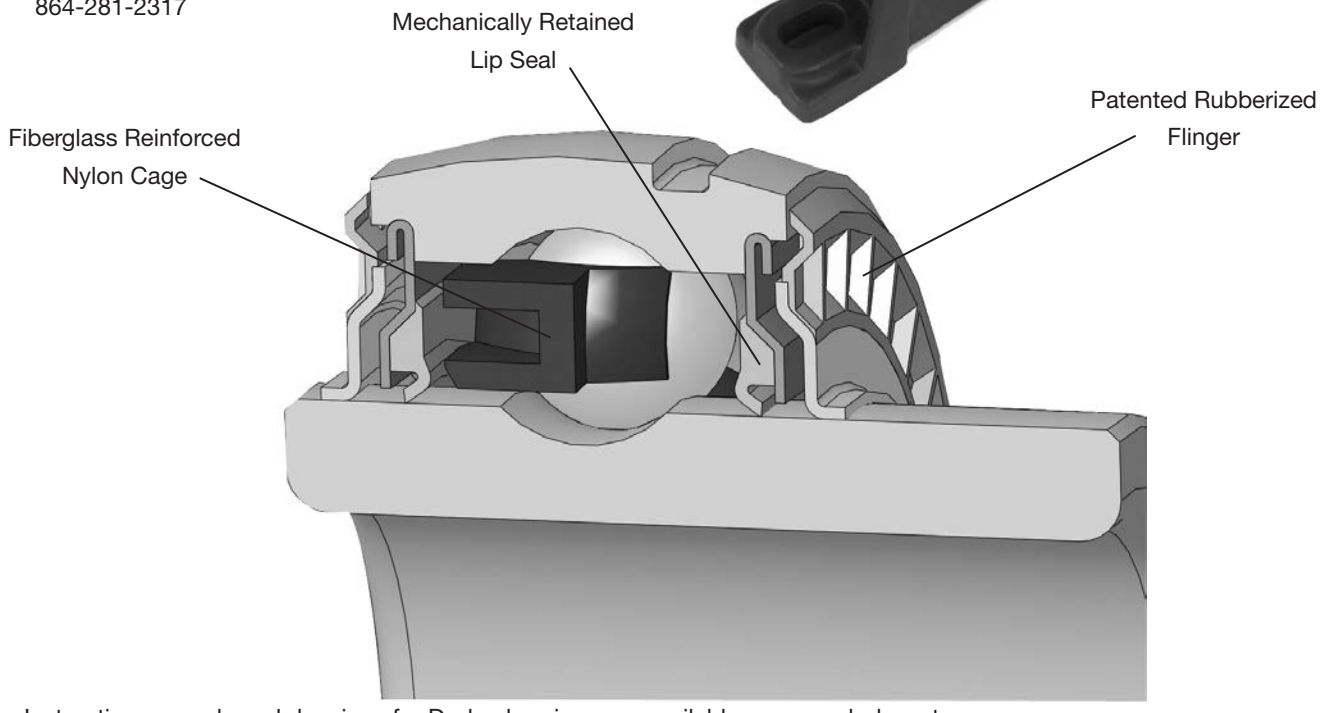

Note: Instruction manuals and drawings for Dodge bearings are available on www.dodge-pt.com

FEATURES/BENEFITS

Stronger, More Flexible Cage

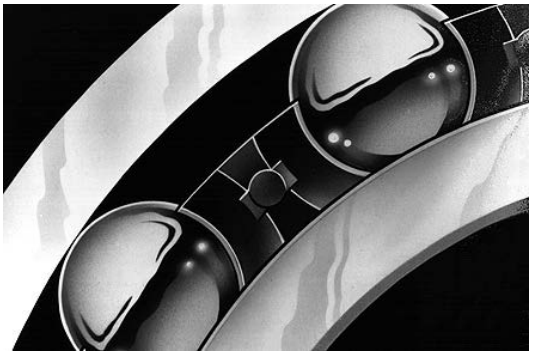

The ball cage is made of heat-stabilized nylon with 33% fill short fiberglass reinforcement for added strength. The nylon material provides a natural lubricity for longer life. Fiberglass reinforcement allows higher operating temperatures than plain nylon, yet it is more resistant to fatigue than metallic cages. Short fiberglass allows greater flexibility than steel or normal fiberglass, especially under misalignment. That means longer life in mounted bearings where some degree of misalignment is unavoidably encountered.

Anti-Rotation Pin (SC,SCM)

An anti-rotation pin prevents rotation of the outer race within the housing. Simple and effective, it makes system inserts easier to replace. There is no need to remove and replace grease fittings, location pins or other devices.



Simplified Anti-rotation device

Note: Instruction manuals and drawings for Dodge bearings are available on www.dodge-pt.com



Setscrew Ball Bearings
HOW TO ORDER

There are two ways to specify DODGE Bearings. Most of the product offering have part numbers with listings shown throughout this catalog. Use of part numbers ensures accurate ordering processing.

When part numbers are not shown, the product may be specified by description or part name. This method is used when ordering units that include modifications or options. To order by description, use the nomenclature key shown below and add any special instructions to the end of the description for options not covered by the nomenclature.

P2B - SC - 104S - NL

Modification or Feature
- CR = Corrosion Resistant Insert
- E = Expansion
- HT = High Temperature option (400° F maximum)
- LL = Low torque labyrinth seal
- MOD - Modified
- NL - No Lube (sealed for life)
- RL = Relube (used with SL flanges)
- SS = Stainless Steel Insert

Shaft Size

Inches:
- First digit = Number of inches
- Second & third digits - number of sixteenths of an inch
  - 104 - Indicates 1-4/16 or 1-1/4
- S = Next smaller ring size. E.g. 1-1/4 206 would be written as 104S
- L = Next larger ring size. E.g. 1/2 204 would be written as 008L

Metric:
- First two digits = number of millimeters
- M = Metric

Bearing Type:
- CC = Wide inner ring, normal duty, setscrew locking (for Fan & Blower pillow blocks)
- SC - Wide inner ring, normal duty, 65° setscrew locking
- SCM = Wide inner ring, medium duty, 65° setscrew locking
- SL = Wide inner ring, light duty, stamped steel housing, 65° setscrew locking

Suffixes to the above:
- AH = Air handling
- B = Low backing height pillow block
- H = High backing height (used with non-expansion and expansion units)

- U = Higher back pillow block (for interchangeability with competitor pillow blocks)
- SCED = Extreme duty
- SCMED = Extreme medium duty

Housing
- CYL = Cylindrical Unit
- F2B = 2 bolt flange
- F2BZ = 2 bolt flange with pilot Machined on the back side (used with metric <D> Lok bearings)
- F3B = 3-bolt flange
- F4B = 4-bolt flange
- FB = Flange bracket
- FC = Flanged cartridge (piloted flange)
- F&B = Fan and blower pillow block
- HNG = Hanger bearing
- LF = 3-bolt light duty flange
- LFT = 2-bolt light duty flange
- NSTU = Narrow slot take-up
- P2B = 2-bolt base pillow block
- SCHB = Screw conveyor hanger bearing
- TB = Tapped base pillow block
- TP = Top angle take-up
- WSTU = Wide slot take-up

SELECTION

DODGE®



Setscrew Ball Bearings

Recommended Torque													
◆ Setscrews					D-LOK			Mounting Bolts					
		Recommended Torque						Metal Housings		EZ-KLEEN Housed Bearings			
Setscrew Size	Key Hex Across Flats	Standard Ball Bearing Insert		Corrosion Resistant Stainless Steel	Cap Screw Size	Recom. Torque	EZ-KLEEN Recom. Torque	Bolt Size	Recom. Dry Torque (Grade 2)	2-Bolt PB, 2 & 4 Bolt Fig. and Flg. Brackets		Tapped Base PB	
		Min	Max							Bolt Size	Torque ①	Bolt Size	Torque ②
(in.)	(in.)	(in-lbs.)	(in.-lbs.)	(in.-lbs.)	(in.)	(in.0lbs.)	(in.-lbs.)	(in.)	(in.0lbs.)	(in.)	(in.-lbs.)	(in.)	(in.lbs.)
#10	3/32	28	33	25	#8-32	58	46	3/8-16	240	3/8-16	225	3/8-16	175
1/4	1/8	66	80	60	#10-32	90	72	7/16-14	384	7/16-14	350	7/16-14	350
5/16	5/32	126	156	117	1/4-28	180	144	1/2-13	600	1/2-13	500	1/2-13	400
3/8	3/16	228	275	206	5/16-24	400	320	5/8-11	1200	9/16-12	650		
7/16	7/32	342	428	321	3/8-24	750	600	3/4-10	1950	5/8-11	1000		
								7/8-9	2890				
(mm)	(mm)	(N-m)	(N-m)	(N-m)	(mm)	(N-m)	(N-m)	(mm)	(N-m)	(mm)	(N-m)	①Torque for Austenitic (18-8) Stainless ②Max. torque values published. Do not exceed	
M5	2.5	3.2	3.7	2.8	M4	585	4.68	M10	29	M8	15		
M6	3	6.2	7.7	5.8	M5	10.75	8.6	M12	50	M10	25		
M8	4	14.2	17.8	13.4	M6	20.5	16.4	M16	124	M12	50		
M10	5	26	31	23	M8	45	36	M20	238	M14	75		
M12	6	46	57	43				M22	322	M18	125		

Lubrication

High Speed Operation - In the higher speed ranges, too much grease will cause over-heating. The amount of grease that the bearing will take for a particular high speed application can only be determined by experience. If excess grease in the bearing causes overheating, it will be necessary to remove grease fitting to permit excess grease to escape. The bearing has been greased at the factory and is ready to run. When establishing a relubrication schedule, note that a small amount of grease at frequent intervals is preferable to a large amount at infrequent intervals.

◆ **Note:** Dodge does not recommend the use of oils or locking agents on setscrew threads. However, if utilized, the minimum installation torque values should be followed.

Lubrication Guide
Use a No. 2 Lithium complex base grease or equivalent*

Hours Run per Day	Suggested Lubrication Period in Weeks							
	1 to 250 RPM	251 to 500 RPM	501 to 750 RPM	751 to 1000 RPM	1001 to 1500 RPM	1501 to 2000 RPM	2001 to 2500 RPM	2501 to 3000 RPM
8	12	12	10	7	5	4	3	2
16	12	7	5	4	2	2	1	1
24	10	5	3	2	1	1	1	1

* For EZ-KLEEN series bearings, use an aluminum complex base grease.

Lubrication recommendations are intended for standard products applied in general operating conditions. For modified products, high temperature applications, and other anomalous applications contact product engineering at 864-284-5700.

Note: Bearing analysis program "BEST" is available on www.ptwizard.com



Setscrew Ball Bearings

DODGE mounted ball bearings are primarily designed for radial loading. However, they have the capacity to carry thrust loads and combined radial/thrust loads. The maximum recommended load which can be applied is limited by various components in the system, such as bearing, housing, shaft attachments, speed and life requirements. DODGE mounted ball bearings have been applied successfully when these limits have been exceeded under controlled operating conditions. Contact DODGE Engineering for applications which exceed these recommendations.

Select a bearing from the Selection Chart that has a radial load rating at the operating speed equal to or greater than the calculated Equivalent Radial load for a desired L_{10} life. This simple method is all that is required for the majority of general applications and provides for occasional average shock loads.

L_{10} Hours Life-is the life which may be expected for at least 90% of a given group of bearings operating under identical conditions.

For an L_{10} hours life other than those listed in the Selection Chart, multiply the equivalent Radial load by one of the following factors. For 50,000 L_{10} hours life, use a factor of 1.18 and for 80,000, use 1.39. Then select a bearing from the bold face (30,000) L_{10} ratings only in the Selection Chart that has a rating equal to or greater than this value.

Heavy Service-For heavy shock loads, frequent shock loads or severe vibrations, add up to 50% (according to severity of conditions) to the Equivalent Radial Load to obtain a Modified Equivalent Radial Load. Consult Application Engineering for additional selection assistance.

A thrust load value of C/10 is recommended as a guide for general applications and will give adequate L_{10} life. Where substantial radial load pulls the housing away from the mounting base, both the hold-down bolts and housing must be of adequate strength. Auxiliary load carrying devices, such as sheer bars, are advisable for side or end-loading of pillow blocks and radial loads for flange units.

To determine the L_{10} hours life for loads and RPM's not listed use the following equation:

$$L_{10} = \left(\frac{C}{P}\right)^3 \times \frac{16{,}667}{N}$$

Where:

L_{10} = Life, hours

C = Dynamic Capacity, lbs. or N

P = Equivalent Radial Load, lbs. or N

N = Revolutions per minute

When the load on a ball bearing is solely a radial load with no thrust (axial) load, the Equivalent Radial Load (P) is equal to the actual radial load. However, when a thrust (axial) load is applied, the radial and thrust loads applied must be converted into an Equivalent Radial Load. The use of the X (radial factor) and Y (thrust factor) from Table 1 convert the actual applied thrust and radial loads to an Equivalent Radial Load which has the same effect on the life of a bearing as a radial load of this magnitude.

$P = (X \times F_R) + (Y \times F_A)$

Where:
P = Equivalent Radial Load, lbs.
F_R = Radial load, lbs.
F_A = Thrust load, lbs.
e = Thrust load to radial load factor (Table 1)
X = Radial load factor (Table 1)
Y = Thrust factor (Table 1)
C_O = Basic static capacity

To find X and Y, first calculate F_A/C_O to determine e. Calculate F_A/F_R and compare to e to determine the X and Y factors to use from Table 1.

Substitute all known values into the Equivalent Radial Load equation. The Equivalent Radial loads (P) thus determined can be used in the L_{10} life formula or compared to the allowable Equivalent Radial Load rating desired in the expanded rating chart to select a bearing (Table 2).

If calculated value of P is less than F_R, use $P=F_R$.

F_A / C_0	e	Radial/Thrust Factors			
		If F_A/F_R is equal to or less than e		If F_A/F_R is greater than e	
		$F_A/F_R <= e$		$F_A/F_R > e$	
		X	Y	X	Y
0.014	0.19	1	0	0.56	2.30
0.021	0.21	1	0	0.56	2.15
0.028	0.22	1	0	0.56	1.99
0.042	0.24	1	0	0.56	1.85
0.056	0.26	1	0	0.56	1.71
0.070	0.27	1	0	0.56	1.63
0.084	0.28	1	0	0.56	1.55
0.110	0.30	1	0	0.56	1.45
0.170	0.34	1	0	0.56	1.31
0.280	0.38	1	0	0.56	1.15
0.420	0.42	1	0	0.56	1.04
0.560	0.44	1	0	0.56	1.00

Lubrication-DODGE Ball Bearings are lubricated at the factory and are ready to run. The bearings are initially lubricated with lithium complex based grease and should be relubricated with the same or some equivalent. For high speeds, high loads, extreme temperatures and other abnormal operating conditions, special greases may be required. Contact DODGE Application Engineering for recommendations on these types of applications.

Misalignment-DODGE Ball Bearings are designed to allow a maximum of ±2° static misalignment. These bearings are not suitable for dynamic misalignment. To ensure good alignment, mounting surfaces must be checked for flatness and must lie in the same plane. When tightening base bolts, each bolt should be alternately tightened in incremental torque values until full torque is achieved to prevent the angular shifting of the pillow block that occurs when one bolt is tightened to its full torque. Shimming may be required to minimize misalignment.

Shaft Tolerances		
Normal Shaft Size Inches	Commercial Shaft Tolerances Inches	Recommended Shaft Tolerances Setscrew Ball Bearings Inches
Up to 1-1/2"	+0.000 -0.002	+0.0000 -0.0005
Over 1-1/2" to 2-1/2"	+0.000 -0.003	+0.0000 -0.0010
Over 2-1/2" to 4"	+0.000 -0.004	+0.0000 -0.0010

Note: Bearing analysis program "BEST" is available on www.ptwizard.com

FEATURES/BENEFITS PAGE B4-3	HOW TO ORDER/NOMENCLATURE PAGE B4-5	SELECTION/DIMENSIONS PAGE B4-12	ACCESSORIES PAGE B4-98

SELECTION



Setscrew Ball Bearing Inch

Table 2: Easy Selection Table For Ball Bearing Mounted Units

Ring Size	Shaft Size SC, VSC, SL, CC	Shaft Size SCM	Dynamic Capacity C, Lbs.	Static Capacity Co, Lbs.	L_{10} LIFE HOURS	Allowable Equivalent Radial Load Rating (Lbs.) At Various RPM* 50	150	250	500	750	1000	1500	1750	2000
203	1/2 5/8		2158	1079	20000	550	380	320	255	225	205	175	170	160
					30000	**480**	**335**	**280**	**225**	**195**	**175**	**155**	**145**	**140**
					40000	440	305	255	205	175	160	140	135	130
					60000	380	265	225	175	155	140	125	115	110
					100000	320	225	190	150	130	120	105	100	95
204	1/2 5/8 3/4 13/16		2899	1482	20000	740	515	435	345	300	275	240	225	215
					30000	**645**	**450**	**380**	**300**	**260**	**240**	**210**	**200**	**190**
					40000	590	410	345	275	240	215	190	180	170
					60000	515	355	300	240	210	190	165	155	150
					100000	435	300	255	200	175	160	140	130	125
205	7/8 15/16 1		3146	1769	20000	805	560	470	375	325	295	260	245	235
					30000	**705**	**485**	**410**	**325**	**285**	**260**	**225**	**215**	**205**
					40000	640	445	375	295	260	235	205	195	185
					60000	560	385	325	260	225	205	180	170	165
					100000	470	325	275	220	190	175	150	145	135
206	1-1/16 1-1/8 1-3/16 1-1/4	1	4368	2538	20000	1115	775	655	520	455	410	360	340	325
					30000	**975**	**675**	**570**	**455**	**395**	**360**	**315**	**300**	**285**
					40000	885	615	520	410	360	325	285	270	260
					60000	775	535	455	360	315	285	250	235	225
					100000	655	455	380	305	265	240	210	200	190
207	1-1/4 1-5/16 1-3/8 1-7/16	1-3/16 1-1/4	5759	3461	20000	1475	1020	860	685	595	545	475	450	430
					30000	**1285**	**890**	**755**	**595**	**520**	**475**	**415**	**395**	**375**
					40000	1170	810	685	545	475	430	375	355	340
					60000	1020	710	595	475	415	375	330	310	300
					100000	860	595	505	400	350	315	275	265	250
208	1-1/2 1-5/8	1-7/16 1 -1/2**	7332	4475	20000	1875	1300	1095	870	760	690	605	575	550
					30000	**1640**	**1135**	**960**	**760**	**665**	**605**	**525**	**500**	**480**
					40000	1490	1030	870	690	605	550	480	455	435
					60000	1300	900	760	605	525	480	420	400	380
					100000	1095	760	640	510	445	405	355	335	320
209	1-5/8 1-11/16 1-3/4	1-1/2	7891	4906	20000	2020	1400	1180	935	820	745	650	615	590
					30000	**1765**	**1225**	**1030**	**820**	**715**	**650**	**570**	**540**	**515**
					40000	1600	1110	935	745	650	590	515	490	470
					60000	1400	970	820	650	570	515	450	430	410
					100000	1180	820	690	550	480	435	380	360	345
210	1-15/16 2	1-11/16 1-3/4	7891	5213	20000	2020	1400	1180	935	820	745	650	615	590
					30000	**1765**	**1225**	**1030**	**820**	**715**	**650**	**570**	**540**	**515**
					40000	1600	1110	935	745	650	590	515	490	470
					60000	1400	970	820	650	570	515	450	430	410
					100000	1180	820	690	550	480	435	380	360	345
211	2 2-3/16 2-1/4	1-15/16 2	9755	6588	20000	2491	1727	1457	1156	1010	918	802	761	729
					30000	**2176**	**1509**	**1272**	**1010**	**882**	**802**	**700**	**665**	**636**
					40000	1977	1371	1156	918	802	728	636	604	578
					60000	1727	1197	1010	802	700	636	556	528	505
					100000	1457	1010	852	676	591	537	469	445	426
212	2-1/4 2-7/16	2-3/16 2-1/4	11791	8100	20000	3015	2090	1765	1400	1225	1110	970	925	880
					30000	**2635**	**1825**	**1540**	**1225**	**1070**	**970**	**880**	**805**	**770**
					40000	2395	1660	1400	1110	970	880	770	730	700
					60000	2090	1450	1225	970	850	770	675	640	610
					100000	1765	1225	1030	820	715	650	570	540	515
214	2 11/16	2-7/16 2-1/2	13995	9838	20000	3580	2480	2095	1660	1450	1320	1155	1095	1045
					30000	**3125**	**2170**	**1830**	**1450**	**1270**	**1155**	**1005**	**955**	**915**
					40000	2840	1970	1660	1320	1155	1045	915	870	830
					60000	2480	1720	1450	1155	1005	915	800	760	725
					100000	2095	1450	1225	970	850	770	675	640	615
215	2-15/16	2-11/16	14872	11108	20000	3805	2640	2225	1765	1545	1400	1225	1165	1115
					30000	**3325**	**2305**	**1945**	**1545**	**1350**	**1225**	**1070**	**1015**	**975**
					40000	3020	2095	1765	1400	1225	1115	975	925	885
					60000	2640	1830	1545	1225	1070	975	850	805	770
					100000	2225	1545	1300	1035	905	820	715	680	650
216		2-15/16 3	17407	13102	20000	4450	3085	2605	2065	1805	1640	1435	1360	1300
					30000	**3890**	**2695**	**2275**	**1805**	**1580**	**1435**	**1250**	**1190**	**1140**
					40000	3535	2450	2065	1640	1435	1300	1140	1080	1035
					60000	3085	2140	1805	1435	1250	1140	995	945	905
					100000	2605	1805	1525	1210	1055	960	840	795	760
218		3-7/16 3-1/2	21451	16641	20000	5485	3805	3210	2550	2225	2025	1765	1680	1605
					30000	**4795**	**3325**	**2805**	**2225**	**1945**	**1765**	**1545**	**1465**	**1405**
					40000	4355	3020	2550	2025	1765	1605	1405	1335	1276
					60000	3805	2640	2225	1765	1545	1405	1225	1165	1115
					100000	3210	2225	1880	1490	1300	1185	1035	980	940

* Slight interference fit required when operating on the right of the heavy line or in the shaded area ** Piloted flange only

Note: Bearing analysis program "BEST" is available on www.ptwizard.com

FEATURES/BENEFITS PAGE B4-3	HOW TO ORDER/NOMENCLATURE PAGE B4-5	SELECTION/DIMENSIONS PAGE B4-12	ACCESSORIES PAGE B4-98



Setscrew Ball Bearing Inch

Table 2 (continued): Easy Selection Table for Ball Bearing Mounted Units

Ring Size	Shaft Size SC, VSC, SL, CC	Shaft Size SCM	Dynamic Capacity C, Lbs.	Static Capacity Co, Lbs.	L_{10} life hours	Allowable Equivalent Radial Load Rating (Lbs.) At Various RPM* 2500	3000	3500	4000	4500	5000	5500	6500	7500
203	1/2 5/8		2158	1079	20000	150	140	135	130	125	120	115	110	105
					30000	**130**	**125**	**115**	**110**	**105**	**105**	**100**	**95**	**90**
					40000	120	110	105	100	95	95	90	85	80
					60000	105	95	95	90	85	80	80	75	70
					100000	85	80	80	75	70	70	65	65	60
204	1/2 5/8 3/4 13/16		2899	1482	20000	200	190	180	170	165	160	155	145	140
					30000	**175**	**165**	**155**	**150**	**145**	**140**	**135**	**130**	**120**
					40000	160	150	145	135	130	125	125	115	110
					60000	140	130	125	120	115	110	105	100	95
					100000	115	110	105	100	90	95	90	85	80
205	7/8 15/16 1		3146	1769	20000	220	205	195	185	180	175	170	160	150
					30000	**190**	**180**	**170**	**165**	**155**	**150**	**145**	**140**	**130**
					40000	175	165	155	150	140	135	135	125	120
					60000	150	140	135	130	125	120	115	110	105
					100000	125	120	115	110	105	100	100	95	90
206	1-1/16 1-1/8 1-3/16 1-1/4	1	4368	2538	20000	305	285	270	260	250	240	235	200	
					30000	**265**	**250**	**235**	**225**	**220**	**210**	**205**	**195**	
					40000	240	225	215	205	200	190	185	175	
					60000	210	200	190	180	175	165	160	155	
					100000	175	165	160	150	145	140	135	130	
207	1-1/4 1-5/16 1-3/8 1-7/16	1-3/16 1-1/4	5759	3461	20000	400	375	355	340	330	315	305		
					30000	**350**	**330**	**310**	**300**	**285**	**275**	**270**		
					40000	315	300	285	270	260	250	245		
					60000	275	260	250	235	230	220	125		
					100000	235	220	210	200	190	185	180		
208	1-1/2 1-5/8	1-7/16 1 -1/2**	7332	4475	20000	510	480	455	435	420	405			
					30000	**445**	**420**	**400**	**380**	**365**	**355**			
					40000	405	380	360	345	330	320			
					60000	355	330	315	300	290	280			
					100000	300	280	265	255	245	235			
209	1-5/8 1-11/16 1-3/4	1-1/2	7891	4906	20000	550	515	490	470	450	435			
					30000	**480**	**450**	**430**	**410**	**395**	**380**			
					40000	435	410	390	370	360	345			
					60000	380	360	340	325	310	300			
					100000	320	300	285	275	265	255			
210	1-15/16 2	1-11/16 1-3/4	7891	5213	20000	550	515	490	470	450				
					30000	**480**	**450**	**430**	**410**	**395**				
					40000	435	410	390	370	360				
					60000	380	360	340	325	310				
					100000	320	300	285	275	265				
211	2 2-3/16 2-1/4	1-15/16 2	9755	6588	20000	676	636	604	578					
					30000	**591**	**556**	**528**	**505**					
					40000	537	505	480	459					
					60000	469	441	419	401					
					100000	395	372	353	338					
212	2-1/4 2-7/16	2-3/16 2-1/4	11791	8100	20000	820	770	730						
					30000	**715**	**675**	**640**						
					40000	650	610	580						
					60000	570	535	510						
					100000	480	450	430						
214	2 11/16	2-7/16 2-1/2	13995	9838	20000	970	915							
					30000	**850**	**800**							
					40000	770	725							
					60000	675	635							
					100000	570	535							
215	2-15/16	2-11/16	14872	11108	20000	1035	975							
					30000	**905**	**850**							
					40000	820	770							
					60000	715	675							
					100000	605	570							
216		2-15/16 3	17407	13102	20000	1210								
					30000	**1055**								
					40000	960								
					60000	840								
					100000	705								
218		3-7/16 3-1/2	21451	16641	20000									
					30000									
					40000									
					60000									
					100000									

* Slight interference fit required when operating on the right of the heavy line or in the shaded area ** Piloted flange only

Note: Bearing analysis program "BEST" is available on www.ptwizard.com

FEATURES/BENEFITS PAGE B4-3	HOW TO ORDER/NOMENCLATURE PAGE B4-5	SELECTION/DIMENSIONS PAGE B4-12	ACCESSORIES PAGE B4-98

SELECTION



Setscrew Ball Bearing Inch

Table 2 (continued): Easy Selection Table for Ball Bearing Mounted Units

Ring Size	Shaft Size SC, VSC, SL, CC	Shaft Size SCM	Dynamic Capacity C, N.	Static Capacity Co, N.	L_{10} life hours	Allowable Equivalent Radial Load Rating (N.) At Various RPM* 50	150	250	500	750	1000	1500	1750	2000
203	17mm		9600	4800	20000	2446	1690	1423	1134	1001	912	778	756	712
					30000	2135	1490	1245	1001	867	778	689	645	623
					40000	1957	1357	1134	912	778	712	623	600	578
					60000	1690	1179	1001	778	689	623	556	512	489
					100000	1423	1001	845	667	578	534	467	445	423
204	20mm		12895	6592	20000	3292	2291	1935	1535	1334	1223	1068	1001	956
					30000	2869	2002	1690	1334	1156	1068	934	890	845
					40000	2624	1824	1535	1223	1068	956	845	801	756
					60000	2291	1579	1334	1068	934	845	734	689	667
					100000	1935	1334	1134	890	778	712	623	578	556
205	25mm		13995	7869	20000	3581	2491	2091	1668	1446	1312	1156	1090	1045
					30000	3136	2157	1824	1446	1268	1156	1001	956	912
					40000	2847	1979	1668	1312	1156	1045	912	867	823
					60000	2491	1712	1446	1156	1001	912	801	756	734
					100000	2091	1446	1223	979	845	778	667	645	600
206	30mm	25mm	18993	11,290	20000	4960	3447	2913	2313	2024	1824	1601	1512	1446
					30000	4337	3002	2535	2024	1757	1601	1401	1334	1268
					40000	3936	2736	2313	1824	1601	1446	1268	1201	1156
					60000	3447	2380	2024	1601	1401	1268	1112	1045	1001
					100000	2913	2024	1690	1357	1179	1068	934	890	845
207	35mm	30mm	25628	15,395	20000	6561	4537	3825	3047	2647	2424	2113	2002	1913
					30000	5716	3959	3358	2674	2313	2113	1846	1757	1668
					40000	5204	3603	3047	2424	2113	1913	1668	1579	1512
					60000	4537	3158	2647	2113	1846	1669	1468	1379	1334
					100000	3825	2647	2246	1779	1557	1401	1223	1179	1112
208	40mm	35mm	32627	19,906	20000	8340	5782	4871	3870	3380	3069	2691	2558	2446
					30000	7295	5048	4270	3380	2958	2691	2335	2224	2135
					40000	6628	4581	3870	3069	2691	2446	2135	2024	1935
					60000	5782	4003	3380	2691	2335	2135	1868	1779	1690
					100000	4871	3380	2847	2268	1979	1801	1579	1490	1423
209	45mm	40mm	35115	21,823	20000	8985	6227	5249	4159	3647	3314	2891	2736	2624
					30000	7851	5449	4581	3649	3180	2891	2535	2402	2291
					40000	7117	4937	4159	3314	2891	2624	2291	2180	2091
					60000	6227	4315	3647	2891	2535	2291	2002	1913	1824
					100000	5249	3647	3069	2446	2135	1935	1690	1601	1535
210	50mm	45mm	35115	23,189	20000	8985	6227	5249	4159	3647	3314	2891	2736	2624
					30000	7851	5449	4581	3647	3180	2891	2535	2402	2291
					40000	7117	4937	4159	3314	2891	2624	2291	2180	2091
					60000	6227	4315	3647	2891	2535	2291	2002	1913	1824
					100000	5249	3647	3069	2446	2135	1935	1690	1601	1535
211	55mm	50mm	43394	29,305	20000	11079	7682	6479	5142	4492	4082	3566	3387	3241
					30000	9678	6711	5660	4492	3924	3566	3115	2959	2831
					40000	8793	6097	5142	4082	3566	3240	2830	2688	2572
					60000	7682	5326	4492	3566	3115	2830	2472	2348	2247
					100000	6479	4492	3789	3007	2627	2387	2085	1981	1895
212	60mm	55mm	52470	36,031	20000	13411	9296	7851	6227	5449	4937	4315	4114	3914
					30000	11720	8118	6850	5449	4759	4315	3914	3581	3425
					40000	10653	7384	6227	4937	4315	3914	3425	3247	3114
					60000	9296	6450	5449	4315	3781	3425	3002	2847	2713
					100000	7851	5449	4581	3647	3180	2891	2535	2402	2291
214	70mm	65mm	62278	43,762	20000	15924	11031	9319	7384	6450	5871	5137	4871	4648
					30000	13900	9672	8140	6450	5649	5137	4470	4248	4070
					40000	12632	8763	7384	5871	5137	4648	4070	3870	3692
					60000	11031	7651	6450	5137	4470	4070	3558	3380	3225
					100000	9319	6450	5449	4315	3781	3425	3002	2847	2736
215	75mm	70mm	66180	49,411	20000	16925	11743	9897	7851	6872	6227	5449	5182	4960
					30000	14790	10253	8651	6872	6005	5449	4759	4515	4337
					40000	13433	9319	7851	6227	5449	4960	4337	4114	3936
					60000	11743	8140	6872	5449	4759	4337	3781	3581	3425
					100000	9897	6872	5782	4604	4025	3647	3180	3025	2891
216		75mm	77426	58,281	20000	19794	13722	11587	9185	8029	7295	6383	6049	5782
					30000	17303	11987	10119	8029	7028	6383	5560	5293	5071
					40000	15724	10898	9185	7295	6383	5782	5071	4804	4604
					60000	13722	9519	8029	6393	5560	5071	4426	4203	4025
					100000	11587	8029	6783	5382	4693	4270	3736	3536	3380
218		85mm	95371	74,023	20000	24397	16925	14278	11342	9897	9007	7851	7473	7139
					30000	21328	14790	12477	9897	8651	7851	6872	6516	6249
					40000	19371	13433	11342	9007	7851	7139	6249	5938	5676
					60000	16925	11743	9897	7851	6872	6249	5449	5182	4960
					100000	14278	9897	8362	6628	5782	5271	4604	4359	4181

* Slight interference fit required when operating on the right of the heavy line or in the shaded area

Note: Bearing analysis program "BEST" is available on www.ptwizard.com

FEATURES/BENEFITS PAGE B4-3	HOW TO ORDER/NOMENCLATURE PAGE B4-5	SELECTION/DIMENSIONS PAGE B4-12	ACCESSORIES PAGE B4-98



Setscrew Ball Bearing Inch

Table 2 (continued): Easy Selection Table for Ball Bearing Mounted Units

Ring Size	Shaft Size SC, VSC, SL, C	Shaft Size SCM	Dynamic Capacity C, N.	Static Capacity Co, N.	L_{10} Life Hours	Allowable equivalent radial load rating (n.) At various RPM* 2500	3000	3500	4000	4500	5000	5500	6500	7500
203	17mm		9600	4800	20000	667	623	600	578	556	534	512	489	467
					30000	578	556	512	489	467	467	445	423	400
					40000	534	489	467	445	423	423	400	378	356
					60000	467	423	423	400	378	356	358	334	311
					100000	378	356	356	334	311	311	289	289	267
204	20mm		12895	6592	20000	890	845	801	756	734	712	689	645	623
					30000	778	724	689	667	645	623	600	578	534
					40000	712	667	645	600	578	556	556	512	489
					60000	623	578	556	534	512	489	467	445	423
					100000	512	489	467	445	400	423	400	378	356
205	25mm		13995	7869	20000	979	912	867	823	801	778	756	712	667
					30000	845	801	756	734	689	667	645	623	578
					40000	778	734	689	667	623	600	600	556	534
					60000	667	623	600	578	556	534	512	489	467
					100000	556	534	512	489	467	445	445	423	400
206	30mm	25mm	18993	11,290	20000	1357	1268	1201	1156	1112	1068	1045	979	
					30000	1179	1112	1045	1001	979	934	912	867	
					40000	1068	1001	958	912	890	845	823	778	
					60000	934	890	845	801	778	734	712	689	
					100000	778	734	712	667	645	623	600	578	
207	35mm	30mm	25628	15,395	20000	1779	1668	1579	1512	1468	1401	1357		
					30000	1557	1468	1379	1134	1268	1223	1201		
					40000	1401	1334	1268	1201	1156	1112	1090		
					60000	1223	1156	1112	1045	1023	979	956		
					100000	1045	979	934	890	845	823	801		
208	40mm	35mm	32627	19,906	20000	2268	2135	2024	1935	1868	1801			
					30000	1979	1868	1779	1690	1624	1579			
					40000	1801	1690	1601	1535	1468	1423			
					60000	1576	1468	1401	1334	1290	1245			
					100000	1334	1245	1179	1134	1090	1045			
209	45mm	40mm	35115	21,823	20000	2446	2291	2180	2091	2002	1935			
					30000	2135	2002	1913	1824	1757	1690			
					40000	1935	1824	1735	1646	1601	1535			
					60000	1690	1601	1512	1446	1379	1334			
					100000	1423	1334	1268	1223	1179	1134			
210	50mm	45mm	35115	23,189	20000	2446	2291	2180	2091	2002				
					30000	2135	2002	1913	1824	1757				
					40000	1935	1824	1735	1646	1601				
					60000	1690	1601	1512	1446	1379				
					100000	1423	1334	1268	1223	1179				
211	55mm	50mm	43394	29,305	20000	3007	2830	2688	2571					
					30000	2627	2472	2348	2246					
					40000	2387	2246	2134	2041					
					60000	2085	1962	1864	1783					
					100000	1759	1655	1572	1504					
212	60mm	55mm	52470	36,031	20000	3647	3425	3247						
					30000	3180	3002	2847						
					40000	2891	2713	2580						
					60000	2535	2380	2268						
					100000	2135	2002	1913						
214	70mm	65mm	62278	43,762	20000	4315	4070							
					30000	3781	3558							
					40000	3425	3225							
					60000	3002	2824							
					100000	2535	2380							
215	75mm	70mm	66180	49,411	20000	4604	4337							
					30000	4025	3781							
					40000	3647	3425							
					60000	3180	3002							
					100000	2691	2535							
216		75mm	77426	58,281	20000	5382								
					30000	4693								
					40000	4270								
					60000	3736								
					100000	3136								
218		85mm	95371	74,023	20000									
					30000									
					40000									
					60000									
					100000									

* Slight interference fit required when operating on the right of the heavy line or in the shaded area

Note: Bearing analysis program "BEST" is available on www.ptwizard.com

FEATURES/BENEFITS PAGE B4-3	HOW TO ORDER/NOMENCLATURE PAGE B4-5	SELECTION/DIMENSIONS PAGE B4-12	ACCESSORIES PAGE B4-98

SELECTION/DIMENSIONS

Setscrew Ball Bearings
SC AND SCU NORMAL DUTY PILLOW BLOCKS

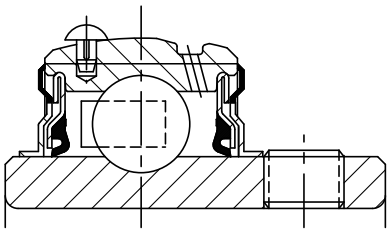

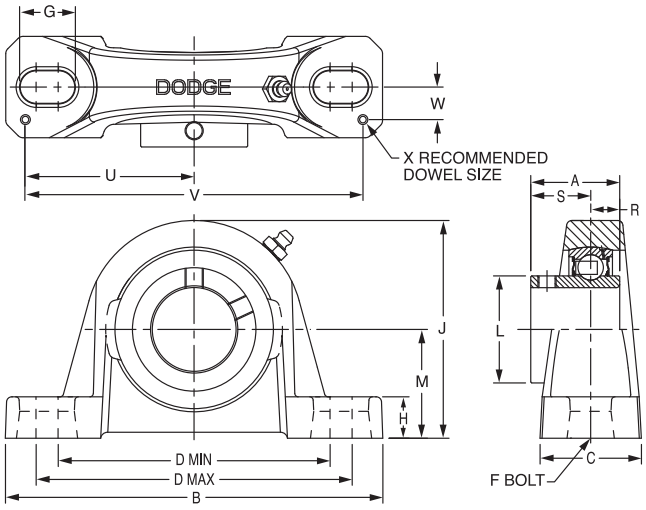

Lube Fitting
203 series - 1/4-28 tapered thread
204 series and larger - 1/8-27 NPT

Series	Shaft Size	Standard		No-Lube/Seal for Life (-NL)	
		Part No.	Description	Part No.	Description
203	1/2	**123830**	P2B-SC-008	**123932**	P2B-SC-008-NL
	5/8	**123831**	P2B-SC-010	**126500**	P2B-SC-010-NL
	17mm	***053170***	*P2B-SC-17M*	**@**	*P2B-SC-17M-NL*
203 (SCU)	1/2	**123753**	P2B-SCU-008	**@**	P2B-SCU-008-NL
	5/8	**123754**	P2B-SCU-010	**@**	P2B-SCU-010-NL
	17mm	***125850***	*P2B-SCU-17M*	*@*	*P2B-SCU-17M-NL*
204	1/2	**123835**	P2B-SC-008L	**052101**	P2B-SC-008L-NL
	5/8	**123836**	P2B-SC-010L	**@**	P2B-SC-010L-NL
	3/4	**123803**	P2B-SC-012	**052012**	P2B-SC-012-NL
	20mm	***125851***	*P2B-SC-20M*	***068372***	*P2B-SC-20M-NL*
205	7/8	**123804**	P2B-SC-014	**126502**	P2B-SC-014-NL
	15/16	**123805**	P2B-SC-015	**126503**	P2B-SC-015-NL
	1	**123806**	P2B-SC-100	**123824**	P2B-SC-100-NL
	25mm	***125852***	*P2B-SC-25M*	***056744***	*P2B-SC-25M-NL*
206	1-1/16	**123807**	P2B-SC-101	**126504**	P2B-SC-101-NL
	1-1/8	**123808**	P2B-SC-102	**126505**	P2B-SC-102-NL
	1-3/16	**123809**	P2B-SC-103	**123828**	P2B-SC-103-NL
	1-1/4	**123170**	P2B-SC-104S	**049852**	P2B-SC-104S-NL
	30mm	***125853***	*P2B-SC-30M*	***074162***	*P2B-SC-30M-NL*
206 (SCU)	1-1/16	**123877**	P2B-SCU-101	**@**	P2B-SCU-101-NL
	1-1/8	**123878**	P2B-SCU-102	**@**	P2B-SCU-102-NL
	1-3/16	**123879**	P2B-SCU-103	**050837**	P2B-SCU-103-NL
	1-1/4	**123894**	P2B-SCU-104S	**073282**	P2B-SCU-104S-NL
	30mm	***125854***	*P2B-SCU-30M*	**@**	*P2B-SCU-30M-NL*
207	1-1/4	**123810**	P2B-SC-104	**123933**	P2B-SC-104-NL
	1-5/16	**123811**	P2B-SC-105	**@**	P2B-SC-105-NL
	1-3/8	**123812**	P2B-SC-106	**123781**	P2B-SC-106-NL
	1-7/16	**123813**	P2B-SC-107	**123792**	P2B-SC-107-NL
	35mm	***125855***	*P2B-SC-35M*	**@**	*P2B-SC-35M-NL*

@ Assembled to order.



Setscrew Ball Bearings
SC AND SCU NORMAL DUTY PILLOW BLOCKS

Series	Shaft Size	Wgt. lbs. kgs	A	B	C	D		F Bolt Dia.	G	H	J	L	M	R	S	U	V	W	X
						Min	Max												
203	1/2	1.1	1.00	5.00	1.20	3.25	4.06	3/8	0.84	0.47	2.14	0.96	1.06	0.36	0.64	2.25	4.50	0.38	0.12
	5/8	1.0																	
	17mm	*0.4*	*25.4*	*127.0*	*30.5*	*82.6*	*103.1*	*M10*	*21.3*	*11.9*	*54.4*	*24.4*	*27.0*	*9.1*	*16.3*	*57.2*	*114.3*	*9.7*	*3.0*
203 SCU	1/2	1.2	1.00	5.00	1.20	3.25	4.06	3/8	0.84	0.59	2.27	0.96	1.19	0.36	0.64	2.25	4.50	0.38	0.12
	5/8	1.0																	
	17mm	*0.4*	*25.4*	*127.0*	*30.5*	*82.6*	*103.1*	*M10*	*21.3*	*15.0*	*57.7*	*24.4*	*30.2*	*9.1*	*16.3*	*57.2*	*114.3*	*9.7*	*3.0*
204	1/2	1.6	1.23	5.25	1.34	3.38	4.19	3/8	0.85	0.53	2.56	1.12	1.31	0.50	0.73	2.25	4.50	0.50	0.12
	5/8	1.5																	
	3/4	1.4																	
	20mm	*0.7*	*31.2*	*133.4*	*34.0*	*85.9*	*106.4*	*M10*	*21.6*	*13.5*	*65.0*	*28.4*	*33.3*	*12.7*	*18.5*	*57.2*	*114.3*	*12.7*	*3.0*
205	7/8	1.8	1.34	5.50	1.40	3.69	4.50	3/8	0.85	0.58	2.77	1.32	1.44	0.56	0.78	2.50	5.00	0.50	0.12
	15/16	1.7																	
	1	1.6																	
	25mm	*0.7*	*34.0*	*139.7*	*35.6*	*93.7*	*114.3*	*M10*	*21.6*	*14.7*	*70.4*	*33.5*	*36.5*	*14.2*	*19.8*	*63.5*	*127.0*	*12.7*	*3.0*
206	1-1/16	2.8	1.52	6.25	1.75	4.25	5.00	1/2	0.94	0.68	3.25	1.57	1.63	0.58	0.94	2.88	5.76	0.56	0.12
	1-1/8	2.7																	
	1-3/16	2.6																	
	1-1/4	2.5																	
	30mm	*1.1*	*38.6*	*158.8*	*44.5*	*108.0*	*127.0*	*M12*	*23.9*	*17.3*	*82.6*	*39.9*	*41.3*	*14.7*	*23.9*	*73.2*	*146.3*	*14.2*	*3.0*
206 SCU	1-1/16	2.9	1.52	6.25	1.75	4.25	5.00	1/2	0.94	0.75	3.31	1.57	1.69	0.58	0.94	2.88	5.76	0.56	0.12
	1-1/8	2.8																	
	1-3/16	2.7																	
	1-1/4	2.6																	
	30mm	*1.1*	*38.6*	*158.8*	*44.5*	*108.0*	*127.0*	*M12*	*23.9*	*19.1*	*84.1*	*39.9*	*42.9*	*14.7*	*23.9*	*73.2*	*146.3*	*14.2*	*3.0*
207	1-1/4	4.5	1.71	6.50	1.75	4.68	5.44	1/2	0.94	0.71	3.75	1.84	1.88	0.67	1.04	2.91	5.82	0.56	0.12
	1-5/16	4.4																	
	1-3/8	4.3																	
	1-7/16	4.2																	
	35mm	*1.5*	*43.4*	*165.1*	*44.5*	*118.9*	*138.2*	*M12*	*23.9*	*18.0*	*95.3*	*46.7*	*47.6*	*17.0*	*26.4*	*73.9*	*147.8*	*14.2*	*3.0*

SELECTION/DIMENSIONS

Setscrew Ball Bearings
SC AND SCU NORMAL DUTY PILLOW BLOCKS

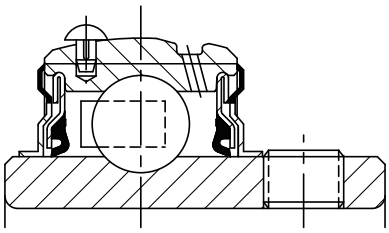

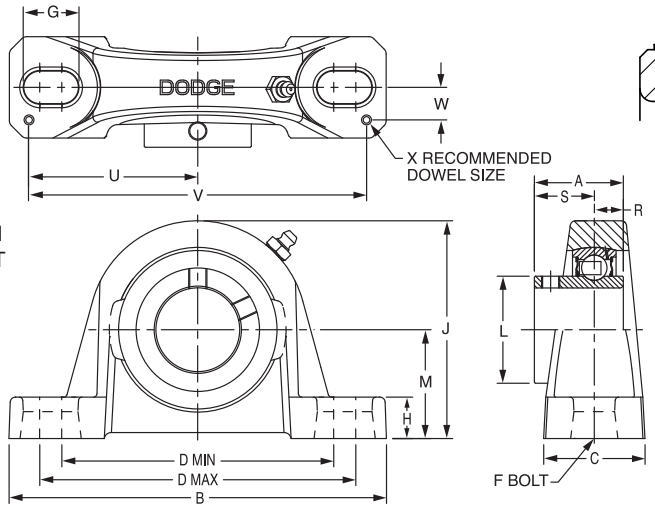

Lube Fitting
203 series - 1/4-28 tapered thread
204 series and larger - 1/8-27 NPT

Series	Shaft Size	Standard		No-Lube/Sealed for Life (-NL)	
		Part No.	Description	Part No.	Description
208	1-1/2	**123814**	P2B-SC-108	**123829**	P2B-SC-108-NL
	1-5/8	**123815**	P2B-SC-110	**126510**	P2B-SC-110-NL
	40mm	***056855***	*P2B-SC-40M*	***067679***	*P2B-SC-40M-NL*
209	1-5/8	**125169**	P2B-SC-110L	**073381**	P2B-SC-110L-NL
	1-11/16	**123816**	P2B-SC-111	**123784**	P2B-SC-111-NL
	1-3/4	**123817**	P2B-SC-112	**123782**	P2B-SC-112-NL
	45mm	***125857***	*P2B-SC-45M*	***067925***	*P2B-SC-45M-NL*
210	1-15/16	**123818**	P2B-SC-115	**123793**	P2B-SC-115-NL
	2	**123819**	P2B-SC-200	**123939**	P2B-SC-200-NL
	50mm	***125858***	*P2B-SC-50M*	***058702***	*P2B-SC-50M-NL*
211	2	**126815**	P2B-SCM-200	**126547**	P2B-SCM-200-NL
	2-3/16	**123820**	P2B-SC-203	**123783**	P2B-SC-203-NL
	2-1/4	**123821**	P2B-SC-204	**126513**	P2B-SC-204-NL
	55mm	***125859***	*P2B-SC-55M*	**@**	*P2B-SC-55M-NL*
212	2-1/4	**126817**	P2B-SCM-204	**@**	P2B-SCM-204-NL
	2-7/16	**123822**	P2B-SC-207	**123987**	P2B-SC-207-NL
	60mm	***125860***	*P2B-SC-60M*	***062162***	*P2B-SC-60M-NL*
214	2-1/2	**126819**	P2B-SCM-208	**062178**	P2B-SCM-208-NL
	2-11/16	**123839**	P2B-SC-211	**068603**	P2B-SC-211-NL
	70mm	***125861***	*P2B-SC-70M*	***126548***	*P2B-SC-70M-NL*
215	2-15/16	**123823**	P2B-SC-215	**123636**	P2B-SC-215-NL
	75mm	***125862***	*P2B-SC-75M*	**@**	*P2B-SC-75M-NL*
215 (SCU)	2-15/16	**123728**	P2B-SCU-215	**@**	P2B-SCU-215-NL
	75mm	***052792***	*P2B-SCU-75M*	**@**	*P2B-SCU-75M-NL*
218	*90mm*	***052794***	*P2B-SC-90M*	**@**	*P2B-SC-90M-NL*

@Assembled to order



Setscrew Ball Bearings
SC AND SCU NORMAL DUTY PILLOW BLOCKS

Series	Shaft Size	Wgt. lbs. kgs	A	B	C	D		F Bolt Dia.	G	H	J	L	M	R	S	U	V	W	X
						Min	Max												
208	1-1/2	5.4	1.94	7.25	1.93	5.18	5.88	1/2	0.91	0.93	4.19	2.05	2.13	0.75	1.19	3.26	6.52	0.69	0.12
	1-5/8	5.3																	
	40mm	*2.2*	*49.3*	*184.2*	*49.0*	*131.6*	*149.4*	*M12*	*23.1*	*23.6*	*106.4*	*52.1*	*54.0*	*19.1*	*30.2*	*82.8*	*165.6*	*17.5*	*3.0*
209	1-5/8	6.6	1.94	7.44	2.00	5.50	6.19	1/2	0.90	0.75	4.28	2.22	2.13	0.75	1.19	3.38	6.76	0.69	0.12
	1-11/16	6.4																	
	1-3/4	6.2																	
	45mm	*2.2*	*49.3*	*189.0*	*50.8*	*139.7*	*157.2*	*M12*	*22.9*	*19.1*	*108.7*	*56.4*	*54.0*	*19.1*	*30.2*	*85.9*	*171.7*	*17.5*	*3.0*
210	1-15/16	7.2	1.94	8.12	2.25	6.00	6.68	5/8	1.02	0.75	4.53	2.43	2.25	0.75	1.19	3.69	7.38	0.81	0.12
	2	7.0																	
	50mm	*2.6*	*49.3*	*206.2*	*57.2*	*152.4*	*169.7*	*M16*	*25.9*	*19.1*	*115.1*	*61.7*	*57.2*	*19.1*	*30.2*	*93.7*	*187.5*	*20.6*	*3.0*
211	2	9.0	2.22	8.88	2.30	6.38	7.44	5/8	1.21	0.88	4.96	2.71	2.50	0.87	1.35	3.94	7.88	0.81	0.12
	2-3/16	8.9																	
	2-1/4	8.8																	
	55mm	*3.3*	*56.4*	*225.6*	*58.4*	*162.1*	*189.0*	*M16*	*30.7*	*22.4*	*126.0*	*68.8*	*63.5*	*22.1*	*34.3*	*100.1*	*200.2*	*20.6*	*3.0*
212	2-1/4	10.8	2.31	9.50	2.37	6.88	7.94	5/8	1.21	0.88	5.40	2.97	2.75	0.90	1.41	4.25	8.50	0.88	0.12
	2-7/16	10.2																	
	60mm	*4.2*	*58.7*	*241.3*	*60.2*	*174.8*	*201.7*	*M16*	*30.7*	*22.4*	*137.2*	*75.4*	*69.9*	*22.9*	*35.8*	*108.0*	*215.9*	*22.4*	*3.0*
214	2-1/2	15.5	2.54	10.75	2.69	7.50	8.50	3/4	1.32	0.94	6.09	3.31	3.00	1.06	1.48	4.88	9.76	0.94	0.12
	2-11/16	15.0																	
	70mm	*6.9*	*64.5*	*273.1*	*68.3*	*190.5*	*215.9*	*M18*	*33.5*	*23.9*	*154.7*	*84.1*	*76.2*	*26.9*	*37.6*	*124.0*	*247.9*	*23.9*	*3.0*
215	2-15/16	20.5	2.33	11.75	2.88	8.50	9.50	7/8	1.44	1.00	6.75	3.62	3.50	0.86	1.47	5.48	10.96	1.04	0.12
	75mm	*7.9*	*59.2*	*298.5*	*73.2*	*215.9*	*241.3*	*M22*	*36.6*	*25.4*	*171.5*	*91.9*	*88.9*	*21.8*	*37.3*	*139.2*	*278.4*	*26.4*	*3.0*
215 SCU	2-15/16	20.7	2.33	11.75	2.88	8.50	9.50	7/8	1.44	1.00	6.50	3.62	3.25	0.86	1.47	5.48	10.96	1.04	0.12
	75mm	*8.0*	*59.2*	*298.5*	*73.2*	*215.9*	*241.3*	*M22*	*36.6*	*25.4*	*165.1*	*91.9*	*82.6*	*21.8*	*37.3*	*139.2*	*278.4*	*26.4*	*3.0*
218	*90mm*	*13.6*	*65.0*	*355.6*	*85.9*	*262.1*	*295.1*	*M22*	*40.4*	*33.3*	*203.2*	*110.5*	*101.6*	*24.4*	*40.6*	*167.6*	*335.3*	*30.2*	*3.0*

SELECTION/DIMENSIONS

Setscrew Ball Bearings
SCAH AND SCUAH AIR HANDLING NORMAL DUTY PILLOW BLOCKS

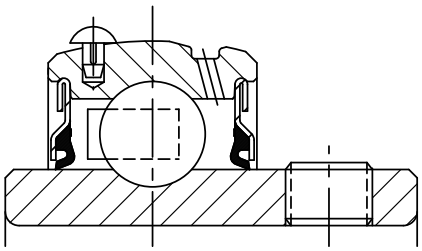

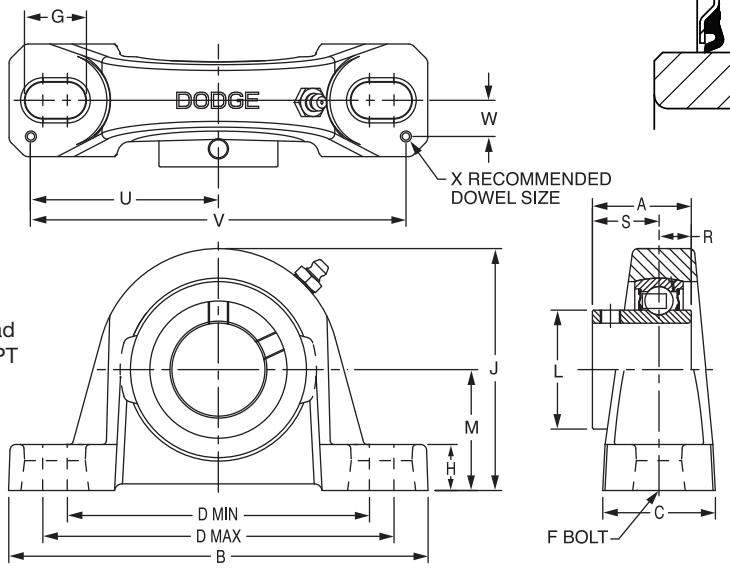

Lube Fitting
203 series - 1/4-28 tapered thread
204 series and larger - 1/8-27 NPT

Series	Shaft Size	Part No.	Description
203	1/2	**123725**	P2B-SCAH-008
	5/8	**123958**	P2B-SCAH-010
	17mm	***075329***	*P2B-SCAH-17M*
203 (SCU)	1/2	**@**	P2B-SCUAH-008
	5/8	**067742**	P2B-SCUAH-010
	17mm	**@**	*P2B-SCUAH-17M*
204	1/2	**@**	P2B-SCAH-008L
	5/8	**123790**	P2B-SCAH-010L
	3/4	**123904**	P2B-SCAH-012
	20mm	***056606***	*P2B-SCAH-20M*
205	7/8	**064450**	P2B-SCAH-014
	15/16	**123903**	P2B-SCAH-015
	1	**123905**	P2B-SCAH-100
	25mm	***053718***	*P2B-SCAH-25M*
206	1-1/16	**@**	P2B-SCAH-101
	1-1/8	**123919**	P2B-SCAH-102
	1-3/16	**123906**	P2B-SCAH-103
	1-1/4	**073724**	P2B-SCAH-104S
	30mm	***067652***	*P2B-SCAH-30M*
206 (SCU)	1-1/16	**@**	P2B-SCUAH-101
	1-1/8	**049690**	P2B-SCUAH-102
	1-3/16	**123916**	P2B-SCUAH-103
	1-1/4	**123183**	P2B-SCUAH-104S
	30mm	***059785***	*P2B-SCUAH-30M*
207	1-1/4	**123907**	P2B-SCAH-104
	1-5/16	**@**	P2B-SCAH-105
	1-3/8	**050792**	P2B-SCAH-106
	1-7/16	**123908**	P2B-SCAH-107
	35mm	***053717***	*P2B-SCAH-35M*

@ Assembled to order



Setscrew Ball Bearings
SCAH AND SCUAH AIR HANDLING NORMAL DUTY PILLOW BLOCKS

Series	Shaft Size	Wgt. lbs kgs.	A	B	C	D		F Bolt Dia.	G	H	J	L	M	R	S	U	V	W	X
						Min	Max												
203	1/2	1.1	1.00	5.00	1.20	3.25	4.06	3/8	0.84	0.47	2.14	0.96	1.06	0.36	0.64	2.25	4.50	0.38	0.12
	5/8	1.0																	
	17mm	*0.4*	*25.4*	*127.0*	*30.5*	*82.6*	*103.1*	*M10*	*21.3*	*11.9*	*54.4*	*24.4*	*27.0*	*9.1*	*16.3*	*57.2*	*114.3*	*9.7*	*3.0*
203 SCU	1/2	1.2	1.00	5.00	1.20	3.25	4.06	3/8	0.84	0.59	2.27	0.96	1.19	0.36	0.64	2.25	4.50	0.38	0.12
	5/8	1.0																	
	17mm	*0.4*	*25.4*	*127.0*	*30.5*	*82.6*	*103.1*	*M10*	*21.3*	*15.0*	*57.7*	*24.4*	*30.2*	*9.1*	*16.3*	*57.2*	*114.3*	*9.7*	*3.0*
204	1/2	1.6	1.23	5.25	1.34	3.38	4.19	3/8	0.85	0.53	2.56	1.12	1.31	0.50	0.73	2.25	4.50	0.50	0.12
	5/8	1.5																	
	3/4	1.4																	
	20mm	*0.7*	*31.2*	*133.4*	*34.0*	*85.9*	*106.4*	*M10*	*21.6*	*13.5*	*65.0*	*28.4*	*33.3*	*12.7*	*18.5*	*57.2*	*114.3*	*12.7*	*3.0*
205	7/8	1.8	1.34	5.50	1.40	3.69	4.50	3/8	0.85	0.58	2.77	1.32	1.44	0.56	0.78	2.50	5.00	0.50	0.12
	15/16	1.7																	
	1	1.6																	
	25mm	*0.7*	*34.0*	*139.7*	*35.6*	*93.7*	*114.3*	*M10*	*21.6*	*14.7*	*70.4*	*33.5*	*36.5*	*14.2*	*19.8*	*63.5*	*127.0*	*12.7*	*3.0*
206	1-1/16	2.8	1.52	6.25	1.75	4.25	5.00	1/2	0.94	0.68	3.25	1.57	1.63	0.58	0.94	2.88	5.76	0.56	0.12
	1-1/8	2.7																	
	1-3/16	2.6																	
	1-1/4	2.5																	
	30mm	*101*	*38.6*	*158.8*	*44.5*	*108.0*	*127.0*	*M12*	*23.9*	*17.3*	*82.6*	*39.9*	*41.3*	*14.7*	*23.9*	*73.2*	*146.3*	*14.2*	*3.0*
206 SCU	1-1/16	2.9	1.52	6.25	1.75	4.25	5.00	1/2	0.94	0.75	3.31	1.57	1.69	0.58	0.94	2.88	5.76	0.56	0.12
	1-1/8	2.8																	
	1-3/16	2.7																	
	1-1/4	2.6																	
	30mm	*1.1*	*38.6*	*158.8*	*44.5*	*108.0*	*127.0*	*M12*	*23.9*	*19.1*	*84.1*	*39.9*	*42.9*	*14.7*	*23.9*	*73.2*	*146.3*	*14.2*	*3.0*
207	1-1/4	4.5	1.71	6.50	1.75	4.68	5.44	1/2	0.94	0.71	3.75	1.84	1.88	0.67	1.04	2.91	5.82	0.56	0.12
	1-5/16	4.4																	
	1-3/8	4.3																	
	1-7/16	4.2																	
	35mm	*1.5*	*43.4*	*165.1*	*44.5*	*118.9*	*138.2*	*M12*	*23.9*	*18.0*	*95.3*	*46.7*	*47.6*	*17.0*	*26.4*	*73.9*	*147.8*	*14.2*	*3.0*

FEATURES/BENEFITS PAGE B4-3	HOW TO ORDER/NOMENCLATURE PAGE B4-5	SELECTION PAGE B4-6	ACCESSORIES PAGE B4-98

SELECTION/DIMENSIONS

Setscrew Ball Bearings
SCAH AND SCUAH AIR HANDLING NORMAL DUTY PILLOW BLOCKS

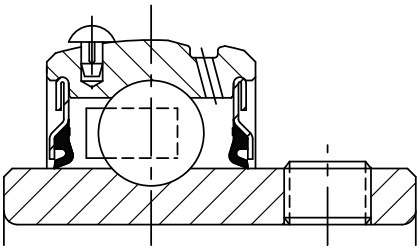

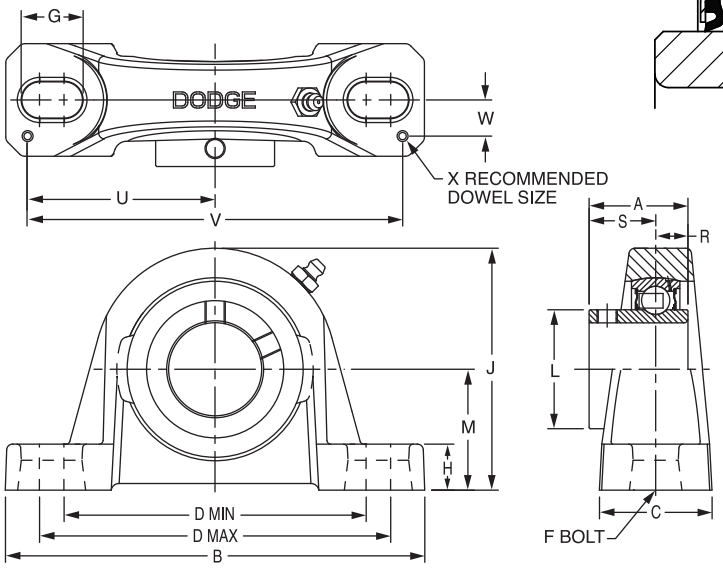

Lube Fitting
203 series - 1/4-28 tapered thread
204 series and larger - 1/8-27 NPT

Series	Shaft Size	Part No.	Description
208	1-1/2	**123909**	P2B-SCAH-108
	1-5/8	**056750**	P2B-SCAH-110
	40mm	***073992***	*P2B-SCAH-40M*
209	1-5/8	**064689**	P2B-SCAH-110L
	1-11/16	**123910**	P2B-SCAH-111
	1-3/4	**123911**	P2B-SCAH-112
	45mm	***052413***	*P2B-SCAH-45M*
210	1-15/16	**123912**	P2B-SCAH-115
	2	**@**	P2B-SCAH-200
	50mm	***052414***	*P2B-SCAH-50M*
211	2	**126847**	P2B-SCMAH-200
	2-3/16	**123913**	P2B-SCAH-203
	2-1/4	**@**	P2B-SCAH-204
	55mm	***@***	*P2B-SCAH-55M*
212	2-1/4	**@**	P2B-SCMAH-204
	2-7/16	**123914**	P2B-SCAH-207
	60mm	***054009***	*P2B-SCAH-60M*
214	2-1/2	**@**	P2B-SCMAH-208
	2-11/16	**124872**	P2B-SCAH-211
	70mm	***@***	*P2B-SCAH-70M*
215	2-15/16	**123915**	P2B-SCAH-215
	75mm	***@***	*P2B-SCAH-75M*
215 *(SCU)*	2-15/16	**@**	P2B-SCUAH-215
	75mm	***@***	*P2B-SCUAH-75M*

@ Assembled to order

DODGE®



Setscrew Ball Bearings
SCAH AND SCUAH AIR HANDLING NORMAL DUTY PILLOW BLOCKS

Series	Shaft Size	Wgt. lbs kgs.	A	B	C	D		F Bolt Dia.	G	H	J	L	M	R	S	U	V	W	X
						Min	Max												
208	1-1/2	5.4	1.94	7.25	1.93	5.18	5.88	1/2	0.91	0.93	4.19	2.05	2.13	0.75	1.19	3.26	6.52	0.69	0.12
	1-5/8	5.3																	
	40mm	*2.2*	*49.3*	*184.2*	*49.0*	*131.6*	*149.4*	*M12*	*23.1*	*23.6*	*106.4*	*52.1*	*54.0*	*19.1*	*30.2*	*82.8*	*165.6*	*17.5*	*3.0*
209	1-5/8	6.6	1.94	7.44	2.00	5.50	6.19	1/2	0.90	0.75	4.28	2.22	2.13	0.75	1.19	3.38	6.76	0.69	0.12
	1-11/16	6.4																	
	1-3/4	6.2																	
	45mm	*2.2*	*49.3*	*189.0*	*50.8*	*139.7*	*157.2*	*M12*	*22.9*	*19.1*	*108.7*	*56.4*	*54.0*	*19.1*	*30.2*	*85.9*	*171.7*	*17.5*	*3.0*
210	1-15/16	7.2	1.94	8.12	2.25	6.00	6.68	5/8	1.02	0.75	4.53	2.43	2.25	0.75	1.19	3.69	7.38	0.81	0.12
	2	7.0																	
	50mm	*2.6*	*49.3*	*206.2*	*57.2*	*152.4*	*169.7*	*M16*	*25.9*	*19.1*	*115.1*	*61.7*	*57.2*	*19.1*	*30.2*	*93.7*	*187.5*	*20.6*	*3.0*
211	2	9.0	2.22	8.88	2.30	6.38	7.44	5/8	1.21	0.88	4.96	2.71	2.50	0.87	1.35	3.94	7.88	0.81	0.12
	2-3/16	8.9																	
	2-1/4	8.8																	
	55mm	*3.3*	*56.4*	*225.6*	*58.4*	*162.1*	*189.0*	*M16*	*30.7*	*22.4*	*126.0*	*68.8*	*63.5*	*22.1*	*34.3*	*100.1*	*200.2*	*20.6*	*3.0*
212	2-1/4	10.8	2.31	9.50	2.37	6.88	7.94	5/8	1.21	0.88	5.40	2.97	2.75	0.90	1.41	4.25	8.50	0.88	0.12
	2-7/16	10.2																	
	60mm	*4.2*	*58.7*	*241.3*	*60.2*	*174.8*	*201.7*	*M16*	*30.7*	*22.4*	*137.2*	*75.4*	*69.9*	*22.9*	*35.8*	*108.0*	*215.9*	*22.4*	*3.0*
214	2-1/2	15.5	2.54	10.75	2.69	7.50	8.50	3/4	1.32	0.94	6.09	3.31	3.00	1.06	1.48	4.88	9.76	0.94	0.12
	2-11/16	1.50																	
	70mm	*6.9*	*64.5*	*273.1*	*68.3*	*190.5*	*215.9*	*M18*	*33.5*	*23.9*	*154.7*	*84.1*	*76.2*	*26.9*	*37.6*	*124.0*	*247.9*	*23.9*	*3.0*
215	2-15/16	20.5	2.33	11.75	2.88	8.50	9.50	7/8	1.44	1.00	6.75	3.62	3.50	0.86	1.47	5.48	10.96	1.04	0.12
	75mm	*7.9*	*59.2*	*298.5*	*73.2*	*215.9*	*241.3*	*M22*	*36.6*	*25.4*	*171.5*	*91.9*	*88.9*	*21.8*	*37.3*	*139.2*	*278.4*	*26.4*	*3.0*
215 SCU	2-15/16	20.7	2.33	11.75	2.88	8.50	9.50	7/8	1.44	1.00	6.50	3.62	3.25	0.86	1.47	5.48	10.96	1.04	0.12
	75mm	*8.0*	*59.2*	*298.5*	*73.2*	*215.9*	*241.3*	*M22*	*36.6*	*25.4*	*165.1*	*91.9*	*82.6*	*21.8*	*37.3*	*139.2*	*278.4*	*26.4*	*3.0*

FEATURES/BENEFITS PAGE B4-3	HOW TO ORDER/NOMENCLATURE PAGE B4-5	SELECTION PAGE B4-6	ACCESSORIES PAGE B4-98

SELECTION/DIMENSIONS

Setscrew Ball Bearings
SCB NORMAL DUTY PILLOW BLOCKS

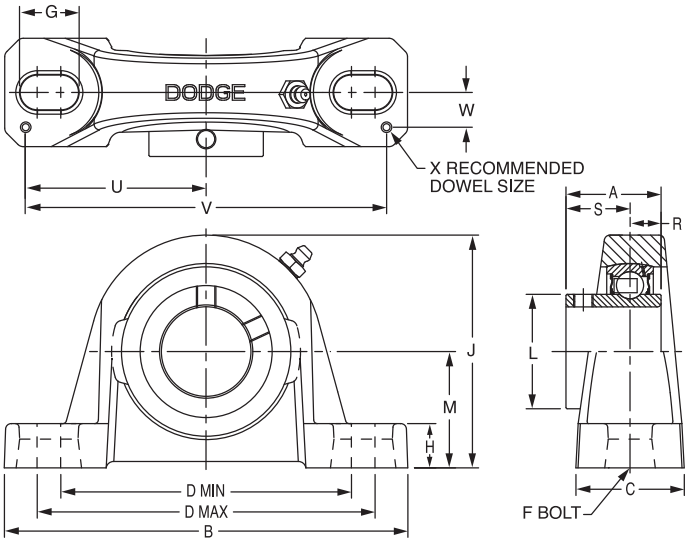

Lube Fitting
203 series - 1/4-28 tapered thread
204 series and larger - 1/8-27 NPT

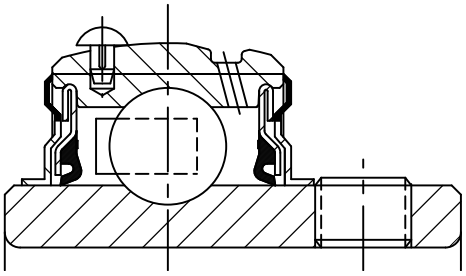

Series	Shaft Size	Part No.	Description
203 (SC)	1/2	**123830**	P2B-SC-008
	5/8	**123831**	P2B-SC-010
	17mm	***053170***	*P2B-SC-17M*
204	1/2	**123854**	P2B-SCB-008L
	5/8	**123855**	P2B-SCB-010L
	3/4	**123860**	P2B-SCB-012
	20mm	***124941***	*P2B-SCB-20M*
205	7/8	**123861**	P2B-SCB-014
	15/16	**123862**	P2B-SCB-015
	1	**123863**	P2B-SCB-100
	25mm	***125768***	*P2B-SCB-25M*
206	1-1/16	**123856**	P2B-SCB-101
	1-1/8	**123864**	P2B-SCB-102
	1-3/16	**123865**	P2B-SCB-103
	1-1/4	**123171**	P2B-SCB-104S
	30mm	***125760***	*P2B-SCB-30M*
207	1-1/4	**123866**	P2B-SCB-104
	1-5/16	**123857**	P2B-SCB-105
	1-3/8	**123867**	P2B-SCB-106
	1-7/16	**123868**	P2B-SCB-107
	35mm	***124944***	*P2B-SCB-35M*
208	1-1/2	**123869**	P2B-SCB-108
	1-5/8	**123858**	P2B-SCB-110
	40mm	***125856***	*P2B-SCB-40M*
209	1-5/8	**068760**	P2B-SCB-110L
	1-11/16	**123870**	P2B-SCB-111
	1-3/4	**123871**	P2B-SCB-112
	45mm	***051878***	*P2B-SCB-45M*
210	1-15/16	**123872**	P2B-SCB-115
	2	**123873**	P2B-SCB-200
	50mm	***051879***	*P2B-SCB-50M*
211	2	**057603**	P2B-SCB-200L
	2-3/16	**123874**	P2B-SCB-203
	2-1/4	**123589**	P2B-SCB-204
	55mm	***124943***	*P2B-SCB-55M*
212	2-1/4	**068361**	P2B-SCB-204L
	2-7/16	**123875**	P2B-SCB-207
	60mm	***051880***	*P2B-SCB-60M*
215	2-15/16	**123727**	P2B-SCB-215
	75mm	***@***	*P2B-SCB-75M*

@ Assembled to order.



Setscrew Ball Bearings
SCB NORMAL DUTY PILLOW BLOCKS

Series	Shaft Size	Weight lbs. kgs.	A	B	C	D Min	D Max	F Bolt Dia	G	H	J	L	M	R	S	U	V	W	X
203 SC	1/2	1.1	1.00	5.00	1.20	3.25	4.06	3/8	0.84	0.47	2.14	0.96	1.06	0.36	0.64	2.25	4.50	0.38	0.12
	5/8	1.0																	
	17mm	*0.4*	*25.4*	*127.0*	*30.5*	*82.6*	*103.1*	*M10*	*21.3*	*11.9*	*54.4*	*24.4*	*26.9*	*9.1*	*16.3*	*57.2*	*114.3*	*9.7*	*3.0*
204	1/2	1.6	1.23	5.25	1.34	3.38	4.19	3/8	0.85	0.47	2.49	1.12	1.25	0.50	0.73	2.25	4.50	0.50	0.12
	5/8	1.5																	
	3/4	1.4																	
	20mm	*0.7*	*31.2*	*133.4*	*34.0*	*85.9*	*106.4*	*M10*	*21.6*	*11.9*	*63.2*	*28.4*	*31.8*	*12.7*	*18.5*	*57.2*	*114.3*	*12.7*	*3.0*
205	7/8	1.8	1.34	5.50	1.40	3.69	4.50	3/8	0.85	0.45	2.64	1.32	1.31	0.56	0.78	2.50	5.00	0.50	0.12
	15/16	1.7																	
	1	1.6																	
	25mm	*.07*	*34.0*	*139.7*	*35.6*	*93.7*	*114.3*	*M10*	*21.6*	*11.4*	*67.1*	*33.5*	*33.3*	*14.2*	*19.8*	*63.5*	*127.0*	*12.7*	*3.0*
206	1-1/16	2.8	1.52	6.25	1.75	4.25	5.00	1/2	0.94	0.62	3.19	1.57	1.56	0.58	0.94	2.88	5.76	0.56	0.12
	1-1/8	2.7																	
	1-3/16	2.6																	
	1-1/4	2.5																	
	30mm	*1.1*	*38.6*	*158.8*	*44.5*	*108.0*	*127.0*	*M12*	*23.9*	*15.8*	*81.0*	*39.9*	*39.6*	*14.7*	*23.9*	*73.2*	*146.3*	*14.2*	*3.0*
207	1-1/4	4.5	1.71	6.50	1.75	4.68	5.44	1/2	0.94	0.65	3.69	1.84	1.81	0.67	1.04	2.91	5.82	0.56	0.12
	1-5/16	4.4																	
	1-3/8	45.3																	
	1-7/16	4.2																	
	35mm	*1.5*	*43.4*	*165.1*	*44.5*	*118.9*	*138.2*	*M12*	*23.9*	*16.5*	*93.7*	*46.7*	*46.0*	*17.0*	*26.4*	*73.9*	*147.8*	*14.2*	*3.0*
208	1-1/2	5.4	1.94	7.25	1.93	5.18	5.88	1/2	0.91	0.75	4.00	2.05	1.94	0.75	1.19	3.26	6.52	0.69	0.12
	1-5/8	5.3																	
	40mm	*2.2*	*49.3*	*184.2*	*49.0*	*131.6*	*149.4*	*M12*	*23.1*	*19.1*	*101.6*	*52.1*	*49.3*	*19.1*	*30.2*	*82.8*	*165.6*	*17.5*	*3.0*
209	1-5/8	6.6	1.94	7.44	2.00	5.50	6.19	1/2	0.90	0.69	4.21	2.22	2.06	0.75	1.19	3.38	6.76	0.69	0.12
	1-11/16	6.4																	
	1-3/4	6.2																	
	45mm	*2.2*	*49.3*	*189.0*	*50.8*	*139.7*	*157.2*	*M12*	*22.9*	*17.5*	*106.9*	*56.4*	*52.3*	*19.1*	*30.2*	*85.9*	*171.7*	*17.5*	*3.0*
210	1-15/16	78.2	1.94	8.12	2.25	6.00	6.68	5/8	1.02	0.68	4.47	2.43	2.19	0.75	1.19	3.69	7.38	0.81	0.12
	2	7.0																	
	50mm	*2.6*	*49.3*	*206.2*	*57.2*	*152.4*	*169.7*	*M16*	*25.9*	*17.3*	*113.5*	*61.7*	*55.6*	*19.1*	*30.2*	*93.7*	*187.5*	*20.6*	*3.0*
211	2	9.0	2.22	8.88	2.30	6.38	7.44	5/8	1.21	0.81	4.90	2.71	2.44	0.87	1.35	3.94	7.88	0.81	0.12
	2-3/16	8.9																	
	2-1/4	8.8																	
	55mm	*3.3*	*56.4*	*225.6*	*58.4*	*162.1*	*189.0*	*M16*	*30.7*	*20.6*	*124.5*	*68.8*	*62.0*	*22.1*	*34.3*	*100.1*	*200.2*	*20.6*	*3.0*
212	2-1/4	10.8	2.31	9.50	2.37	6.88	7.94	5/8	1.21	0.81	5.34	2.97	2.69	0.90	1.41	4.25	8.50	0.88	0.12
	2-7/16	10.2																	
	60mm	*4.2*	*58.7*	*241.3*	*60.2*	*174.8*	*201.7*	*M16*	*30.7*	*20.6*	*135.6*	*75.4*	*68.3*	*22.9*	*35.8*	*108.0*	*215.9*	*22.4*	*3.0*
215	2-15/16	20.5	2.33	11.75	2.88	8.50	9.50	7/8	1.44	1.06	6.56	3.62	3.31	0.86	1.47	5.48	10.96	1.04	0.12
	75mm	*7.9*	*59.2*	*298.5*	*73.2*	*215.9*	*241.3*	*M22*	*36.6*	*26.9*	*166.6*	*91.9*	*84.1*	*21.8*	*37.3*	*139.2*	*278.4*	*26.4*	*3.0*

SELECTION/DIMENSIONS

Setscrew Ball Bearings
SCBAH AIR HANDLING NORMAL DUTY PILLOW BLOCKS

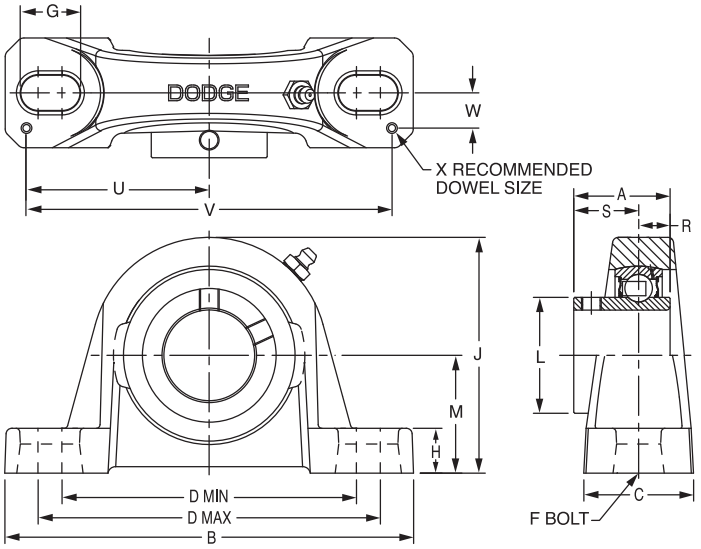

Lube Fitting
203 series - 1/4-28 tapered thread
204 series and larger - 1/8-27 NPT

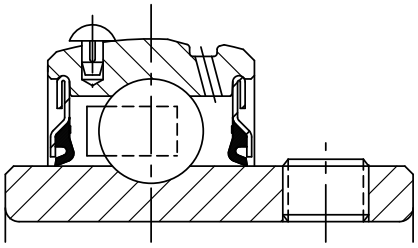

Series	Shaft Size	Part No.	Description
203	1/2	**123725**	P2B-SCAH-008
	5/8	**123958**	P2B-SCAH-010
	17mm	**@**	*P2B-SCAH-17M*
204	1/2	**@**	P2B-SCBAH-008L
	5/8	**068307**	P2B-SCBAH-010L
	3/4	**123959**	P2B-SCBAH-012
	20mm	**@**	*P2B-SCBAH-20M*
205	7/8	**@**	P2B-SCBAH-014
	15/16	**@**	P2B-SCBAH-015
	1	**123960**	P2B-SCBAH-100
	25mm	**@**	*P2B-SCBAH-25M*
206	1-1/16	**@**	P2B-SCBAH-101
	1-1/8	**@**	P2B-SCBAH-102
	1-3/16	**123961**	P2B-SCBAH-103
	1-1/4	**123962**	P2B-SCBAH-104S
	30mm	**@**	*P2B-SCBAH-30M*
207	1-1/4	**123963**	P2B-SCBAH-104
	1-5/16	**@**	P2B-SCBAH-105
	1-3/8	**@**	P2B-SCBAH-106
	1-7/16	**123918**	P2B-SCBAH-107
	35mm	**@**	*P2B-SCBAH-35M*
208	1-1/2	**123936**	P2B-SCBAH-108
	1-5/8	**@**	P2B-SCBAH-110
	40mm	***054727***	*P2B-SCBAH-40M*
209	1-5/8	**065774**	P2B-SCBAH-110L
	1-11/16	**123964**	P2B-SCBAH-111
	1-3/4	**@**	P2B-SCBAH-112
	45mm	**@**	*P2B-SCBAH-45M*
210	1-15/16	**123938**	P2B-SCBAH-115
	2	**123693**	P2B-SCBAH-200
	50mm	**@**	*P2B-SCBAH-50M*
211	2	**@**	P2B-SCBAH-200L
	2/3/16	**123965**	P2B-SCBAH-203
	2-1/4	**@**	P2B-SCBAH-204
	55mm	**@**	*P2B-SCBAH-55M*
212	2-1/4	**@**	P2B-SCBAH-204L
	2-7/16	**123966**	P2B-SCBAH-207
	60mm	**@**	*P2B-SCBAH-60M*
215	2-15/16	**@**	P2B-SCBAH-215
	75mm	**@**	*P2B-SCBAH-75M*

@ Assembled to order



Setscrew Ball Bearings
SCBAH AIR HANDLING NORMAL DUTY PILLOW BLOCKS

Series	Shaft Size	Weight lbs kgs	A	B	C	D		F Bolt Dia.	G	H	J	L	M	R	S	U	V	W	X
						Min.	Max.												
203	1/2	1.1	1.00	5.00	1.20	3.25	4.06	3/8	0.84	0.47	2.14	0.96	1.06	0.36	0.64	2.25	4.50	0.38	0.12
	5/8	1.0																	
	17mm	*0.4*	*25.4*	*127.0*	*30.5*	*82.6*	*103.1*	*M10*	*21.3*	*11.9*	*54.4*	*24.4*	*26.9*	*9.1*	*16.3*	*57.2*	*114.3*	*9.7*	*3.0*
204	1/2	*1.6*	1.23	5.25	1.34	3.38	4.19	3/8	0.85	0.47	2.49	1.12	1.25	0.50	0.73	2.25	4.50	0.50	0.12
	5/8	1.5																	
	3/4	1.4																	
	20mm	*0.7*	*31.2*	*133.4*	*34.04*	*85.9*	*106.4*	*M10*	*21.6*	*11.9*	*63.3*	*28.5*	*31.8*	*12.7*	*18.5*	*57.2*	*114.3*	*12.7*	*3.1*
205	7/8	*1.8*	*1.34*	*5.50*	*1.40*	*3.69*	*4.50*	*3/8*	*0.85*	*0.45*	*2.64*	*1.32*	*1.31*	*0.56*	*0.78*	*2.50*	*5.00*	*0.50*	*0.12*
	15/16	1.7																	
	1	1.6																	
	25mm	*0.7*	*34.0*	*139.7*	*35.6*	*93.7*	*114.3*	*M10*	*21.6*	*11.4*	*67.1*	*33.5*	*33.3*	*14.2*	*19.8*	*63.5*	*127*	*12.7*	*3.1*
206	1-1/16	2.8	1.52	6.25	1.75	4.25	5.00	1/2	0.94	0.623	3.19	1.57	1.56	0.58	0.94	2.88	5.76	0.56	0.12
	1-1/8	*2.7*																	
	1-3/16	2.6																	
	1-1/4	2.5																	
	30mm	*1.1*	*38.6*	*158.8*	*44.5*	*108.0*	*127.0*	*M12*	*23.9*	*15.8*	*81.0*	*39.9*	*39.6*	*14.7*	*23.9*	*73.2*	*146.3*	*14.2*	*3.1*
207	1-1/4	4.5	1.71	6.50	1.75	4.68	5.44	1/2	0.94	0.65	3.69	1.84	1.81	0.67	1.04	2.91	5.82	0.56	0.12
	1-5/16	*4.4*																	
	1-3/8	4.3																	
	1-7/16	4.2																	
	35mm	*1.5*	*43.4*	*165.1*	*44.5*	*118.9*	*138.2*	*M12*	*23.9*	*16.5*	*93.7*	*46.7*	*46.0*	*17.0*	*26.4*	*73.9*	*147.8*	*14.2*	*3.1*
208	1-1/2	5.4	1.94	7.25	1.93	5.18	5.88	1/2	0.91	0.75	4.00	2.05	1.94	0.75	1.19	3.26	6.52	0.69	0.12
	1-5/8	5.3																	
	40mm	*2.2*	*49.3*	*184.2*	*49.0*	*131.6*	*149.4*	*M12*	*23.1*	*19.1*	*101.6*	*52.1*	*49.3*	*19.1*	*30.2*	*82.8*	*165.6*	*17.5*	*3.1*
209	1-5/8	*6.5*	1.94	7.44	2.00	5.50	6.19	1/2	0.90	0.69	4.21	2.22	2.06	0.75	1.19	3.38	6.76	0.69	0.12
	1-11/16	6.4																	
	1-3/4	6.2																	
	45mm	*2.2*	*49.3*	*189.0*	*50.8*	*139.7*	*157.2*	*M12*	*22.9*	*17.5*	*106.9*	*56.4*	*52.3*	*19.1*	*30.2*	*85.9*	*171.7*	*17.5*	*3.1*
210	1-15/16	7.2	1.94	8.12	2.25	6.00	6.68	5/8	1.02	0.68	4.47	2.43	2.19	0.75	1.19	3.69	7.38	0.81	0.12
	2	7.0																	
	50mm	*2.6*	*49.3*	*206.3*	*57.2*	*152.4*	*169.7*	*M16*	*25.9*	*17.2*	*113.5*	*61.7*	*55.6*	*19.1*	*30.2*	*93.7*	*187.5*	*20.6*	*3.1*
211	2	*9.0*	2.22	8.88	2.30	6.38	7.44	5/8	1.21	0.81	4.90	2.71	2.44	0.87	1.35	3.94	7.88	0.81	0.12
	2/3/16	8.9																	
	2-1/4	8.8																	
	55mm	*3.3*	*56.4*	*225.6*	*58.4*	*162.1*	*189.0*	*M16*	*30.7*	*20.6*	*124.5*	*68.8*	*62.0*	*22.1*	*34.3*	*100.1*	*200.2*	*20.6*	*3.1*
212	2-1/4	10.8	2.31	9.50	2.37	6.88	7.94	5/8	1.21	0.81	5.34	2.97	2.69	0.90	1.41	4.25	8.50	0.88	0.12
	2-7/16	*10.2*																	
	60mm	*4.2*	*58.7*	*241.3*	*60.2*	*174.8*	*201.7*	*M16*	*30.7*	*20.6*	*135.6*	*75.4*	*68.3*	*22.9*	*35.8*	*108.0*	*215.9*	*22.4*	*3.1*
215	2-15/16	*20.5*	2.33	11.75	2.88	8.50	9.50	7/8	1.44	1.06	6.56	3.62	3.31	0.86	1.47	5.48	10.96	1.04	0.12
	75mm	*7.9*	*59.18*	*298.5*	*73.2*	*215.9*	*241.3*	*M22*	*36.6*	*26.9*	*166.6*	*92.0*	*84.1*	*21.8*	*37.3*	*139.2*	*278.4*	*26.4*	*3.1*

SELECTION/DIMENSIONS

DODGE®



Setscrew Ball Bearings
SCH-E EXPANSION NORMAL DUTY PILLOW BLOCKS

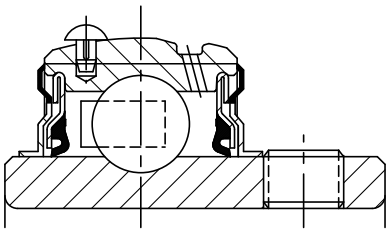

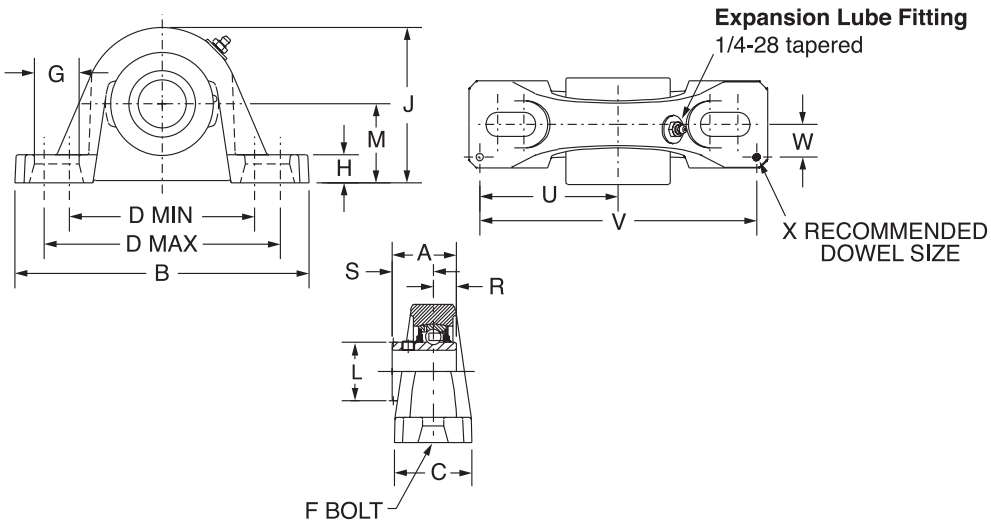

Series	Shaft Size	Expansion		Non-Expansion	
		Part Number	Description	Part Number	Description
205	1	**064637**	P2B-SCH-100-E	**126147**	P2B-SCM-100
	25mm	***073418***	*P2B-SCH-25M-E*	***125925***	*P2B-SCM-25M*
206	1-1/16	**@**	P2B-SCH-101-E	**- - - - - -**	- - - - - - - - -
	1-1/8	**@**	P2B-SCH-102-E	**- - - - - -**	- - - - - - - - -
	1 3/16	**126405**	P2B-SCH-103-E	**126147**	P2B-SCM-103
	1-1/4	**053183**	P2B-SCH-104S-E	**123810**	P2B-SC-104
	30mm	***053021***	*P2B-SCH-30M-E*	***125926***	*P2B-SCM-30M*
207	1-1/4	**@**	P2B-SCH-104-E	**- - - - - -**	- - - - - - - - -
	1-5/16	**@**	P2B-SCH-105-E	**- - - - - -**	- - - - - - - - -
	1-3/8	**@**	P2B-SCH-106-E	**- - - - - -**	- - - - - - - - -
	1-7/16	**126406**	P2B-SCH-107-E	**126810**	P2B-SCM-107
	35mm	***073358***	*P2B-SCH-35M-E*	***125927***	*P2B-SCM-35M*
209	1-5/8	**@**	P2B-SCH-110L-E	**- - - - - -**	- - - - - - - - -
	1-11/16	**057414**	P2B-SCH-111-E	**126812**	P2B-SCM-111
	1-3/4	**074926**	P2B-SCH-112-E	**126813**	P2B-SCM-112
	45mm	***056481***	*P2B-SCH-45M-E*	***125929***	*P2B-SCM-45M*
210	1-15/16	**126407**	P2B-SCH-115-E	**126814**	P2B-SCM-115
	2	**052224**	P2B-SCH-200-E	**126815**	P2B-SCM-200
	50mm	***056483***	*P2B-SCH-50M-E*	***125930***	*P2B-SCM-50M*
211	2-3/16	**126408**	P2B-SCH-203-E	**126816**	P2B-SCM-203
	2-1/4	**068800**	P2B-SCH-204-E	**126817**	P2B-SCM-204
	55mm	***053025***	*P2B-SCH-55M-E*	***125931***	*P2B-SCM-55M*
212	2-7/16	**126409**	P2B-SCH-207-E	**126818**	P2B-SCM-207
	60mm	***@***	*P2B-SCH-60M-E*	- - - - - -	- - - - - - - - -

@Assembled to order

DODGE®



Setscrew Ball Bearings

SCH-E EXPANSION NORMAL DUTY PILLOW BLOCKS

Series	Shaft Size	Weight lbs. kgs.	A	B	C	D		F	G	H	J
						Min.	Max.				
205	1	2.8	1.34	6.25	1.75	4.25	5.00	1/2	0.94	0.75	3.31
	25mm	*1.2*	*34.0*	*158.8*	*44.5*	*108.0*	*127.0*	*M12*	*23.9*	*19.1*	*84.1*
206	1-1/16 1-1/8 1 3/16 1-1/4	4.8 4.7 4.6 4.5	1.52	6.50	1.75	4.68	5.44	1/2	0.94	0.71	3.75
	30mm	*1.9*	*38.6*	*165.1*	*44.5*	*118.9*	*138.2*	*M12*	*23.9*	*18.0*	*95.3*
207	1-1/4 1-5/16 1-3/8 1-7/16	6.7 6.6 6.5 6.4	1.71	7.25	1.93	5.18	5.88	1/2	0.91	0.93	4.19
	35mm	*2.7*	*43.4*	*184.2*	*49.0*	*131.6*	*149.4*	*M12*	*23.1*	*23.6*	*106.4*
209	1-5/8 1-11/16 1-3/4	6.4 6.3 6.2	1.94	8.12	2.25	6.00	6.68	5/8	1.02	0.75	4.53
	45mm	*2.6*	*49.3*	*206.2*	*57.2*	*152.4*	*169.7*	*M16*	*25.9*	*19.1*	*115.1*
210	1-15/16 2	9.8 9.7	1.94	8.88	2.30	6.38	7.44	5/8	1.21	0.88	4.96
	50mm	*4.0*	*49.3*	*225.6*	*58.4*	*162.1*	*189.0*	*M16*	*30.7*	*22.4*	*126.0*
211	2-3/16 2-1/4	14.3 14.2	2.22	9.50	2.37	6.88	7.94	5/8	1.21	0.88	5.40
	55mm	*5.9*	*56.4*	*241.3*	*60.2*	*174.8*	*201.7*	*M16*	*30.7*	*22.4*	*137.2*
212	2-7/16	16.6	2.31	10.75	2.69	7.50	8.50	3/4	1.32	0.94	6.09
	60mm	*6.8*	*58.7*	*273.1*	*68.3*	*190.5*	*215.9*	*M18*	*33.5*	*23.8*	*154.7*

Series	Shaft Size	L	M	R	S	T Total Expansion	U	V	W	X
205	1	1.32	1.69	0.56	0.78	0.16	2.88	5.76	0.56	0.12
	25mm	*33.5*	*42.9*	*14.2*	*19.8*	*4.1*	*73.2*	*146.3*	*14.2*	*3.0*
206	1-1/16 1-1/8 1 3/16 1-1/4	1.57	1.88	0.58	0.94	0.16	2.91	5.82	0.56	0.12
	30mm	*39.9*	*47.8*	*14.7*	*23.9*	*4.1*	*73.9*	*147.8*	*14.2*	*3.0*
207	1-1/4 1-5/16 1-3/8 1-7/16	1.84	2.13	0.67	1.04	0.16	3.26	6.52	0.69	0.12
	35mm	*46.7*	*54.1*	*17.0*	*26.4*	*4.1*	*82.8*	*165.6*	*17.5*	*3.0*
209	1-5/8 1-11/16 1-3/4	2.05	2.25	0.75	1.19	0.25	3.69	7.38	0.81	0.12
	45mm	*52.1*	*57.2*	*19.1*	*30.2*	*6.4*	*93.7*	*187.5*	*20.6*	*3.0*
210	1-15/16 2	2.43	2.50	0.75	1.19	0.22	3.94	7.88	0.81	0.12
	50mm	*61.7*	*63.5*	*19.1*	*30.2*	*5.6*	*100.1*	*200.2*	*20.6*	*3.0*
211	2-3/16 2-1/4	2.71	2.75	.87	1.35	0.22	4.25	8.50	0.88	0.12
	55mm	*68.8*	*69.9*	*22.1*	*34.3*	*5.6*	*108.0*	*215.9*	*22.4*	*3.0*
212	2-7/16	2.97	3.00	0.90	1.41	0.22	4.88	9.76	0.94	0.12
	60mm	*75.4*	*76.2*	*22.9*	*35.8*	*5.6*	*124.0*	*247.9*	*23.9*	*3.0*

FEATURES/BENEFITS PAGE B4-3 | HOW TO ORDER/NOMENCLATURE PAGE B4-5 | SELECTION PAGE B4-6 | ACCESSORIES PAGE B4-98

SELECTION/DIMENSIONS

Setscrew Ball Bearings
SCM MEDIUM DUTY PILLOW BLOCKS

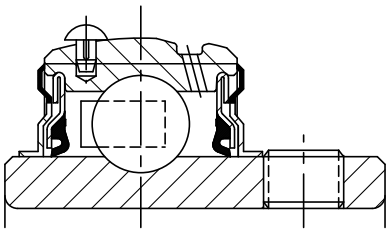

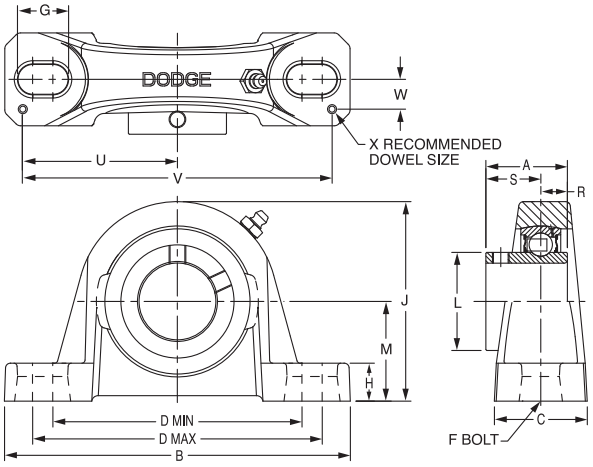

Lube Fitting
203 series - 1/4-28 tapered thread
204 series and larger - 1/8-27 NPT

Series	Shaft Size	Standard		No-Lube/Sealed for Life (-NL)	
		Part No.	Description	Part No.	Description
206	1	**126147**	P2B-SCM-100	**058624**	P2B-SCM-100-NL
	25mm	***125925***	*P2B-SCM-25M*	**@**	*P2B-SCM-25M-NL*
206 (SCMU)	1	**064249**	P2B-SCMU-100	**@**	P2B-SCMU-100-NL
	25mm	**@**	*P2B-SCMU-25M*	**@**	*P2B-SCMU-25M-NL*
207	1-3/16	**126148**	P2B-SCM-103	**052275**	P2B-SCM-103-NL
	1-1/4	**123810**	P2B-SC-104	**123933**	P2B-SC-104-NL
	30mm	***125926***	*P2B-SCM-30M*	***077777***	*P2B-SCM-30M-NL*
208	1-7/16	**126810**	P2B-SCM-107	**126855**	P2B-SCM-107-NL
	35mm	***125927***	*P2B-SCM-35M*	**@**	*P2B-SCM-35M-NL*
209	1-1/2	**126811**	P2B-SCM-108	**058400**	P2B-SCM-108-NL
	1-5/8	**125169**	P2B-SC-110L	**@**	P2B-SC-110L-NL
	40mm	***125928***	*P2B-SCM-40M*	*@*	*P2B-SCM-40M-NL*
210	1-11/16	**126812**	P2B-SCM-111	**075105**	P2B-SCM-111-NL
	1-3/4	**126813**	P2B-SCM-112	**@**	P2B-SCM-112-NL
	45mm	***125929***	*P2B-SCM-45M*	**@**	*P2B-SLM-45M-NL*
211	1-15/16	**126814**	P2B-SCM-115	**126856**	P2B-SCM-115-NL
	2	**126815**	P2B-SCM-200	**126547**	P2B-SCM-200-NL
	50mm	***125930***	*P2B-SCM-50M*	***065548***	*P2B-SCM-50M-NL*
212	2-3/16	**126816**	P2B-SCM-203	**052005**	P2B-SCM-203-NL
	2-1/4	**126817**	P2B-SCM-204	**@**	P2B-SCM-204-NL
	55mm	***125931***	*P2B-SCM-55M*	**@**	*P2B-SCM-55M-NL*
214	2-7/16	**126818**	P2B-SCM-207	**126857**	P2B-SCM-207-NL
	2-1/2	**126819**	P2B-SCM-208	**062178**	P2B-SCM-208-NL
	65mm	***125932***	*P2B-SCM-65M*	***068025***	*P2B-SCM-65M-NL*
215	2-11/16	**126820**	P2B-SCM-211	**126533**	P2B-SCM-211-NL
	70mm	***125933***	*P2B-SCM-70M*	**@**	*P2B-SC-70M-NL*
216	2-15/16	**126821**	P2B-SCM-215	**126534**	P2B-SCM-215-NL
	3	**126822**	P2B-SCM-300	**126535**	P2B-SCM-300-NL
	75mm	***125934***	*P2B-SCM-75M*	***062186***	*P2B-SCM-75M-NL*
218	3-7/16	**126823**	P2B-SCM-307	**@**	P2B-SCM-307-NL
	3-1/2	**126824**	P2B-SCM-308	**@**	P2B-SCM-308-NL
	85mm	***125935***	*PWB-SCM-85M*	**@**	*PWB-SCM-85M-NL*

@ Assembled to order



Setscrew Ball Bearings
SCM MEDIUM DUTY PILLOW BLOCKS

Series	Shaft Size	Weight Lbs. / kg.	A	B	C	D Min.	D Max.	F	G	H	J	L	M	R	S	U	V	W	X
206	1	3.0	1.52	6.25	1.75	4.25	5.00	1/2	0.94	0.68	3.25	1.57	1.63	0.58	0.94	2.88	5.76	0.56	0.12
	25mm	*1.3*	*38.6*	*158.8*	*44.5*	*108.0*	*127.0*	*M12*	*23.9*	*17.3*	*82.6*	*39.9*	*41.3*	*14.7*	*23.9*	*73.2*	*146.3*	*14.2*	*3.0*
206 SCMU	1	3.1	1.52	6.25	1.75	4.25	5.00	1/2	0.94	0.81	3.37	1.57	1.75	0.58	0.94	2.88	5.76	0.56	0.12
	25mm	*1.4*	*38.6*	*158.8*	*44.5*	*108.0*	*127.0*	*M12*	*23.9*	*20.6*	*85.6*	*39.9*	*44.5*	*14.7*	*23.9*	*73.2*	*146.3*	*14.2*	*3.0*
207	1-3/16	4.6	1.71	6.50	1.75	4.68	5.44	1/2	0.94	0.71	3.75	1.84	1.88	0.67	1.04	2.91	5.82	0.56	0.12
	1-1/4	4.2																	
	30mm	*2.0*	*43.4*	*165.1*	*44.5*	*118.9*	*138.2*	*M12*	*23.9*	*18.0*	*95.3*	*46.7*	*47.6*	*17.0*	*26.4*	*73.9*	*147.8*	*14.2*	*3.0*
208	1-7/16	5.4	1.94	7.25	1.93	5.18	5.88	1/2	0.91	0.93	4.19	2.05	2.13	0.75	1.19	3.26	6.52	0.69	0.12
	35mm	*2.3*	*49.3*	*184.2*	*49.0*	*131.6*	*149.4*	*M12*	*23.1*	*23.6*	*106.4*	*52.1*	*54.0*	*19.1*	*30.2*	*82.8*	*165.6*	*17.5*	*3.0*
209	1-1/2	6.4	1.94	7.44	2.00	5.50	6.19	1/2	0.90	0.75	4.28	2.22	2.13	0.75	1.19	3.38	6.76	0.69	0.12
	1-5/8	6.3																	
	40mm	*2.7*	*49.3*	*189.0*	*50.8*	*139.7*	*157.2*	*M12*	*22.9*	*19.1*	*108.7*	*56.4*	*54.0*	*19.1*	*30.2*	*85.9*	*171.7*	*17.5*	*3.0*
210	1-11/16	7.4	1.94	8.12	2.25	6.00	6.68	5/8	1.02	0.75	4.53	2.43	2.25	0.75	1.19	3.69	7.38	0.81	0.12
	1-3/4	7.3																	
	45mm	*3.2*	*49.3*	*206.2*	*57.2*	*152.4*	*169.7*	*M16*	*25.9*	*19.1*	*115.1*	*61.7*	*57.2*	*19.1*	*30.2*	*93.7*	*187.5*	*20.6*	*3.0*
211	1-15/16	9.2	2.22	8.88	2.30	6.38	7.44	5/8	1.21	0.88	4.96	2.71	2.50	0.87	1.35	3.94	7.88	0.81	0.12
	2	9.0																	
	50mm	*3.9*	*56.4*	*225.6*	*58.4*	*162.1*	*189.0*	*M16*	*30.7*	*22.4*	*126.0*	*68.8*	*63.5*	*22.1*	*34.3*	*100.1*	*200.2*	*20.6*	*3.0*
212	2-3/16	11.0	2.31	9.50	2.37	6.88	7.94	5/8	1.21	0.88	5.40	2.97	2.75	0.90	1.41	4.25	8.50	0.88	0.12
	2-1/4	10.8																	
	55mm	*4.7*	*58.7*	*241.3*	*60.2*	*174.8*	*201.7*	*M16*	*30.7*	*22.4*	*137.2*	*75.4*	*69.9*	*22.9*	*35.8*	*108.0*	*215.9*	*22.4*	*3.0*
214	2-7/16	15.7	2.54	10.75	2.69	7.50	8.50	3/4	1.32	0.94	6.09	3.31	3.00	1.06	1.48	4.88	9.76	0.94	0.12
	2-1/2	15.5																	
	65mm	*6.7*	*64.5*	*273.1*	*68.3*	*190.5*	*215.9*	*M18*	*33.5*	*23.9*	*154.7*	*84.1*	*76.2*	*26.9*	*37.6*	*124.0*	*247.9*	*23.9*	*3.0*
215	2-11/16	21.0	2.33	11.75	2.88	8.50	9.50	7/8	1.44	1.00	6.75	3.62	3.50	0.86	1.47	5.48	10.96	1.04	0.12
	70mm	*9.0*	*59.2*	*298.5*	*73.2*	*215.9*	*241.3*	*M22*	*36.6*	*25.4*	*171.5*	*91.9*	*88.9*	*21.8*	*37.3*	*139.2*	*278.4*	*26.4*	*3.0*
216	2-15/16	21.3	2.38	11.75	3.00	8.50	9.50	7/8	1.44	1.25	6.97	3.83	3.50	0.88	1.50	5.50	11.00	1.09	0.12
	3	21.1																	
	75mm	*9.0*	*60.5*	*298.5*	*76.2*	*215.9*	*241.3*	*M22*	*36.6*	*31.8*	*177.0*	*97.3*	*88.9*	*22.4*	*38.1*	*139.7*	*279.4*	*27.7*	*3.0*
218	3-7/16	31.8	2.56	14.00	3.38	10.32	11.62	7/8	1.59	1.31	8.00	4.35	4.00	0.96	1.60	6.60	13.20	1.19	0.12
	3-1/2	31.3																	
	85mm	*13.6*	*65.0*	*355.6*	*85.9*	*262.1*	*295.1*	*M22*	*40.4*	*33.3*	*203.2*	*110.5*	*101.6*	*24.4*	*40.6*	*167.6*	*335.3*	*30.2*	*3.0*

SELECTION/DIMENSIONS

Setscrew Ball Bearings
SCMAH AIR HANDLING MEDIUM DUTY PILLOW BLOCKS

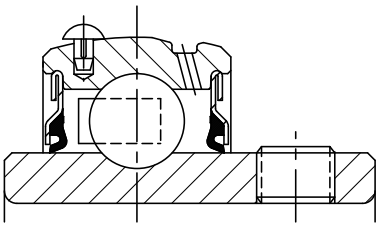

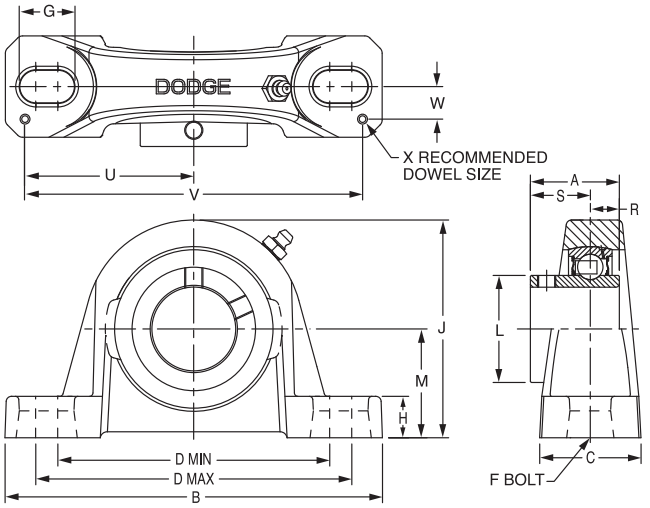

Lube Fitting
203 series - 1/4-28 tapered thread
204 series and larger - 1/8-27 NPT

Series	Shaft Size	Part No.	Description
206	1	**126110**	P2B-SCMAH-100
	25mm	***073416***	*P2B-SCMAH-25M*
207	1-3/16	**126112**	P2B-SCMAH-103
	1-1/4	**123907**	P2B-SCAH-104
	30mm	***064756***	*P2B-SCMAH-30M*
208	1-7/16	**126835**	P2B-SCMAH-107
	35mm	***062304***	*P2B-SCMAH-35M*
209	1-1/2	**126836**	P2B-SCMAH-108
	1-5/8	**@**	P2B-SCAH-110L
	40mm	***064136***	*P2B-SCMAH-40M*
210	1-11/16	**126837**	P2B-SCMAH-111
	1-3/4	**126838**	P2B-SCMAH-112
	45mm	***062321***	*P2B-SCMAH-45M*
211	1-15/16	**126839**	P2B-SCMAH-115
	2	**126847**	P2B-SCMAH-200
	50mm	***056811***	*P2B-SCMAH-50M*
212	2-3/16	**126840**	P2B-SCMAH-203
	2-1/4	**@**	P2B-SCMAH-204
	55mm	***049816***	*P2B-SCMAH-55M*
214	2-7/16	**126841**	P2B-SCMAH-207
	2-1/2	**064537**	P2B-SCMAH-208
	65mm	***075262***	*P2B-SCMAH-65M*
215	2-11/16	**126842**	P2B-SCMAH-211
	70mm	***049818***	*P2B-SCMAH-70M*
216	2-15/16	**126843**	P2B-SCMAH-215
	3	**074381**	P2B-SCMAH-300
	75mm	***053719***	*P2B-SCM-75M*
218	3-7/16	**126844**	P2B-SCMAH-307
	3-1/2	**@**	P2B-SCMAH-308
	85mm	**@**	*P2B-SCMAH-85M*

@ Assembled to order.



Setscrew Ball Bearings
SCMAH AIR HANDLING MEDIUM DUTY PILLOW BLOCKS

Series	Shaft Size	Weight lbs. kgs.	A	B	C	D Min.	D Max.	F	G	H	J	L	M	R	S	U	V	W	X
206	1	3.0	1.52	6.25	1.75	4.25	5.00	1/2	0.94	0.68	3.25	1.57	1.63	0.58	0.94	2.88	5.76	0.56	0.12
	25mm	*1.3*	*38.6*	*158.8*	*44.5*	*108.0*	*127.0*	*M12*	*23.9*	*17.3*	*82.6*	*39.9*	*41.3*	*14.7*	*23.9*	*73.2*	*146.3*	*14.2*	*3.0*
207	1-3/16	4.6	1.71	6.50	1.75	4.68	5.44	1/2	0.94	0.71	3.75	1.84	1.88	0.67	1.04	2.91	5.82	0.56	0.12
	1-1/4	4.2																	
	30mm	*2.0*	*43.4*	*165.1*	*44.5*	*118.9*	*138.2*	*M12*	*23.9*	*18.0*	*95.3*	*46.7*	*47.6*	*17.0*	*26.4*	*73.9*	*147.8*	*14.2*	*3.0*
208	1-7/16	5.4	1.94	7.25	1.93	5.18	5.88	1/2	0.91	0.93	4.19	2.05	2.13	0.75	1.19	3.26	6.52	0.69	0.12
	35mm	*2.3*	*49.3*	*184.2*	*49.0*	*131.6*	*149.4*	*M12*	*23.1*	*23.6*	*106.4*	*52.1*	*54.0*	*19.1*	*30.2*	*82.8*	*165.6*	*17.5*	*3.0*
209	1-1/2	6.4	1.94	7.44	2.00	5.50	6.19	1/2	0.90	0.75	4.28	2.22	2.13	0.75	1.19	3.38	6.76	0.69	0.12
	1-5/8	6.3																	
	40mm	*2.7*	*49.3*	*189.0*	*50.8*	*139.7*	*157.2*	*M12*	*22.9*	*19.1*	*108.7*	*56.4*	*54.0*	*19.1*	*30.2*	*85.9*	*171.7*	*17.5*	*3.0*
210	1-11/16	7.4	1.94	8.12	2.25	6.00	6.68	5/8	1.02	0.75	4.53	2.43	2.25	0.75	1.19	3.69	7.38	0.81	0.12
	1-3/4	7.3																	
	45mm	*3.2*	*49.3*	*206.2*	*57.2*	*152.4*	*169.7*	*M16*	*25.9*	*19.1*	*115.1*	*61.7*	*57.2*	*19.1*	*30.2*	*93.7*	*187.5*	*20.6*	*3.0*
211	1-15/16	9.2	2.22	8.88	2.30	6.38	7.44	5/8	1.21	0.88	4.96	2.71	2.50	0.87	1.35	3.94	7.88	0.81	0.12
	2	9.0																	
	50mm	*3.9*	*56.4*	*225.6*	*58.4*	*162.1*	*189.0*	*M16*	*30.7*	*22.4*	*126.0*	*68.8*	*63.5*	*22.1*	*34.3*	*100.1*	*200.2*	*20.6*	*3.0*
212	2-3/16	11.0	2.31	9.50	2.37	6.88	7.94	5/8	1.21	0.88	5.40	2.97	2.75	0.90	1.41	4.25	8.50	0.88	0.12
	2-1/4	10.8																	
	55mm	*4.7*	*58.7*	*241.3*	*60.2*	*174.8*	*201.7*	*M16*	*30.7*	*22.4*	*137.2*	*75.4*	*69.9*	*22.9*	*35.8*	*108.0*	*215.9*	*22.4*	*3.0*
214	2-7/16	15.7	2.54	10.75	2.69	7.50	8.50	3/4	1.32	0.94	6.09	3.31	3.00	1.06	1.48	4.88	9.76	0.94	0.12
	2-1/2	15.5																	
	65mm	*6.7*	*64.5*	*273.1*	*68.3*	*190.5*	*215.9*	*M18*	*33.5*	*23.9*	*154.7*	*84.1*	*76.2*	*26.9*	*37.6*	*124.0*	*247.9*	*23.9*	*3.0*
215	2-11/16	21.0	2.33	11.75	2.88	8.50	9.50	7/8	1.44	1.00	6.75	3.62	3.50	0.86	1.47	5.48	10.96	1.04	0.12
	70mm	*9.0*	*59.2*	*298.5*	*73.2*	*215.9*	*241.3*	*M22*	*36.6*	*25.4*	*171.5*	*91.9*	*88.9*	*21.8*	*37.3*	*139.2*	*278.4*	*26.4*	*3.0*
216	2-15/16	21.3	2.38	11.75	3.00	8.50	9.50	7/8	1.44	1.25	6.97	3.83	3.50	0.88	1.50	5.50	11.00	1.09	0.12
	3	21.1																	
	75mm	*9.1*	*60.5*	*298.5*	*76.2*	*215.9*	*241.3*	*M22*	*36.6*	*31.8*	*177.0*	*97.3*	*88.9*	*22.4*	*38.1*	*139.7*	*279.4*	*27.7*	*3.0*
218	3-7/16	31.8	2.56	14.0	3.38	10.32	11.62	7/8	1.59	1.31	8.00	4.35	4.00	0.96	1.60	6.60	13.20	1.19	0.12
	3-1/2	31.3																	
	85mm	*13.6*	*65.0*	*355.6*	*85.9*	*262.1*	*295.1*	*M22*	*40.4*	*33.3*	*203.2*	*110.5*	*101.6*	*24.4*	*40.6*	*167.6*	*335.3*	*30.2*	*3.0*

FEATURES/BENEFITS PAGE B4-3	HOW TO ORDER/NOMENCLATURE PAGE B4-5	SELECTION PAGE B4-6	ACCESSORIES PAGE B4-98

SELECTION/DIMENSIONS

Setscrew Ball Bearings
SL LIGHT DUTY PILLOW BLOCKS

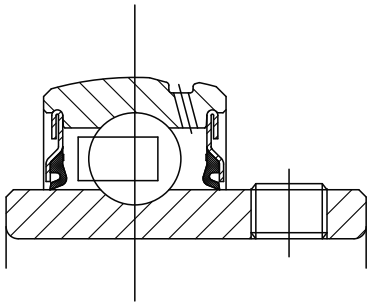

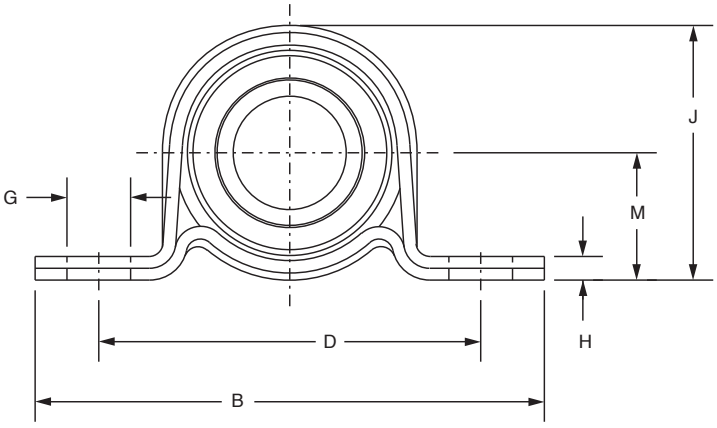

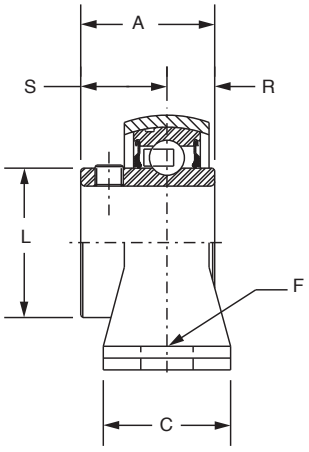

Series	Shaft Size	Part No.	Description
203	1/2	**059637**	P2B-SL-008
	5/8	**128197**	P2B-SL-010
	17mm	***@***	*P2BSL-17M*
204	3/4	**128106**	P2B-SL-012
	20mm	***@***	*P2B-SL-20M*
205	7/8	**128170**	P2B-SL-014
	15/16	**128171**	P2B-SL-015
	1	**128107**	P2B-SL-100
	25mm	***068068***	*P2B-SL-25M*
206	1-1/8	**128172**	P2B-SL-102
	1-3/16	**128108**	P2B-SL-103
	1-1/4	**128111**	P2B-SL-104S
	30mm	***049944***	*P2B-SL-30M*
207	1-1/4	**128109**	P2B-SL-104
	1-3/8	**128173**	P2B-SL-106
	1-7/16	**128110**	P2B-SL-107
	35mm	***@***	*P2B-SL-35M*

@ Assembled to order



Setscrew Ball Bearings
SL LIGHT DUTY PILLOW BLOCKS

Series	Shaft Size	Weight lb. kg.	A	B	C	D	F Bolt Dia.	G	H	J	L	M	R	S	Housing Radial Load Rating (lbs)
203	1/2	0.51	1.00	3.63	1.00	2.69	1/4	0.50	0.13	1.75	0.96	0.88	0.36	0.64	250
	5/8	0.49													
	17mm	*0.2*	*25.4*	*92.2*	*25.4*	*68.3*	*M6*	*12.7*	*3.3*	*44.5*	*24.4*	*22.4*	*9.1*	*16.3*	*1,112*
204	3/4	0.61	1.02	4.13	1.00	3.00	3/8	0.50	0.15	2.06	1.12	1.00	0.29	0.73	350
	20mm	*0.3*	*25.9*	*104.9*	*25.4*	*76.2*	*M10*	*12.7*	*3.8*	*52.3*	*28.4*	*25.4*	*7.4*	*18.5*	*1,556*
205	7/8	0.79	1.06	4.50	1.13	3.38	3/8	0.56	0.21	2.22	1.32	1.13	0.30	0.76	400
	15/16	0.76													
	1	0.73													
	25mm	*0.4*	*26.9*	*114.3*	*28.7*	*85.9*	*M10*	*14.2*	*5.3*	*56.4*	*33.5*	*28.7*	*7.6*	*19.3*	*1,779*
206	1-1/8	1.14	1.26	4.88	1.25	3.75	3/8	0.56	0.24	2.62	1.57	1.31	0.35	0.91	600
	1-3/16	1.12													
	1-1/4	1.10													
	30mm	*0.5*	*32.0*	*124.0*	*31.8*	*95.3*	*M10*	*14.2*	*6.1*	*66.5*	*39.9*	*33.3*	*8.9*	*23.1*	*2,668*
207	1-1/4	1.54	1.40	5.75	1.25	4.25	1/2	0.75	0.24	3.12	1.84	1.56	0.37	1.03	800
	1-3/8	1.50													
	1-7/16	1.48													
	35mm	*0.7*	*35.6*	*146.1*	*31.8*	*108.0*	*M12*	*19.1*	*6.1*	*79.2*	*46.7*	*39.6*	*9.4*	*26.2*	*3,557*

FEATURES/BENEFITS PAGE B4-3	HOW TO ORDER/NOMENCLATURE PAGE B4-5	SELECTION PAGE B4-6	ACCESSORIES PAGE B4-98

SELECTION/DIMENSIONS

Setscrew Ball Bearings
SC NORMAL DUTY TAPPED BASE PILLOW BLOCKS

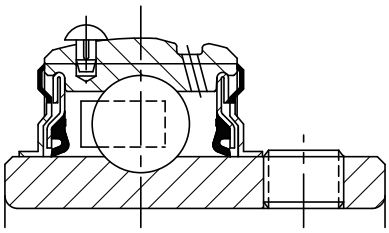

Lube Fitting Thread Size:
1/8 - 27 NPT

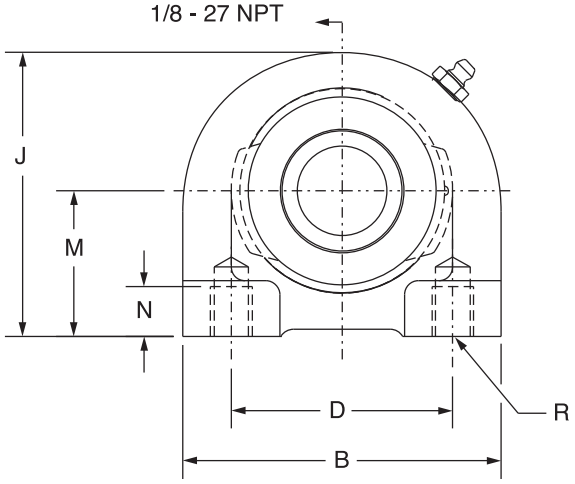

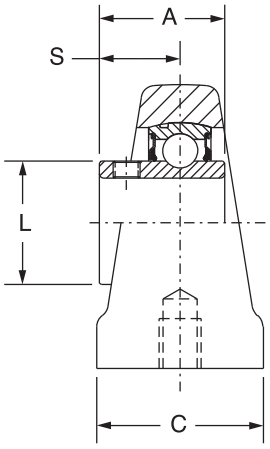

Series	Shaft Size	Part No.	Description
204	1/2	**124460**	TB-SC-008
	5/8	**124461**	TB-SC-010
	3/4	**124462**	TB-SC-012
	20mm	***130354***	*TB-SC-20M*
205	7/8	**124463**	TB-SC-014
	15/16	**124464**	TB-SC-015
	1	**124465**	TB-SC-100
	25mm	***130355***	*TB-SC-25M*
206	1-1/16	**124466**	TB-SC-101
	1-1/8	**124467**	TB-SC-102
	1-3/16	**124468**	TB-SC-103
	1-1/4	**124469**	TB-SC-104S
	30mm	***130356***	*TB-SC-30M*
207	1-1/4	**124470**	TB-SC-104
	1-5/16	**124471**	TB-SC-105
	1-3/8	**124472**	TB-SC-106
	1-7/16	**124473**	TB-SC-107
	35mm	***130357***	*TB-SC-35M*
208	1-1/2	**124479**	TB-SC-108
	1-5/8	**128998**	TB-SC-110
	40mm	***130358***	*TB-SC-40M*
209	1-5/8	**049859**	TB-SC-110L
	1-11/16	**054548**	TB-SC-111
	1-3/4	**054781**	TB-SC-112
	45mm	***130359***	*TB-SC-45M*
210	1-15/16	**124478**	TB-SC-115
	2	**052472**	TB-SC-200
	50mm	***130360***	*TB-SC-50M*
211	2	**124480**	TB-SC-200L
	2-3/16	**050386**	TB-SC-203
	2-1/4	**054436**	TB-SC-204
	55mm	***130361***	*TB-SC-55M*



Setscrew Ball Bearings
SC NORMAL DUTY TAPPED BASE PILLOW BLOCKS

Series	Shaft Size	Weight lbs. kgs.	A	B	C	D	J	L	M	N	R	S
204	1/2	1.56	1.23	2.88	1.50	2.00	2.56	1.12	1.31	0.50	3/8-16	0.73
	5/8	1.53										
	3/4	1.50										
	20mm	*0.06*	*31.2*	*73.2*	*38.1*	*50.8*	*65.0*	*28.4*	*33.4*	*12.7*	*M8x1.25*	*18.5*
205	7/8	1.93	1.34	3.00	1.50	2.00	2.81	1.32	1.44	0.50	3/8-16	0.78
	15/16	1.90										
	1	1.87										
	25mm	*0.07*	*34.0*	*76.2*	*38.1*	*50.8*	*71.4*	*33.5*	*36.5*	*12.7*	*M10x1.5*	*19.8*
206	1-1/16	2.66	1.52	4.00	1.50	3.00	3.38	1.57	1.69	0.63	7/16-14	0.94
	1-1/8	2.62										
	1-3/16	2.59										
	1-1/4	2.56										
	30mm	*0.10*	*38.6*	*101.6*	*38.1*	*76.2*	*85.9*	*39.9*	*42.9*	*16.0*	*M10x1.5*	*23.9*
207	1-1/4	3.41	1.71	4.25	1.88	3.25	3.75	1.84	1.88	0.75	1/2-13	1.04
	1-5/16	3.36										
	1-3/8	3.34										
	1-7/16	3.25										
	35mm	*0.13*	*43.4*	*108.0*	*47.8*	*82.6*	*95.3*	*46.7*	*47.6*	*19.1*	*M10x1.5*	*26.4*
208	1-1/2	4.10	1.94	4.63	1.88	3.50	3.94	2.05	1.94	0.75	1/2-13	1.19
	1-5/8	4.00										
	40mm	*0.16*	*49.3*	*117.6*	*47.8*	*88.9*	*100.1*	*52.1*	*49.2*	*19.1*	*M12x1.75*	*30.2*
209	1-5/8	5.20	1.94	5.00	2.00	3.75	4.25	2.22	2.13	0.75	1/2-13	1.19
	1-11/16	5.00										
	1-3/4	4.90										
	45mm	*0.20*	*49.3*	*127.0*	*50.8*	*95.3*	*108.0*	*56.4*	*54.0*	*19.1*	*M12x1.75*	*30.2*
210	1-15/16	5.40	1.94	5.50	2.00	4.00	4.63	2.43	2.25	0.88	5/8-11	1.19
	2	5.20										
	50mm	*0.21*	*49.3*	*139.7*	*50.8*	*101.6*	*117.6*	*61.7*	*57.2*	*22.4*	*M16x2*	*30.2*
211	2	6.70	2.22	5.50	2.00	4.00	4.63	2.71	2.25	0.88	5/8-11	1.35
	2-3/16	6.50										
	2-1/4	6.30										
	55mm	*0.25*	*56.4*	*139.7*	*50.8*	*101.6*	*117.6*	*68.8*	*57.2*	*22.4*	*M16x2*	*34.3*

FEATURES/BENEFITS PAGE B4-3	HOW TO ORDER/NOMENCLATURE PAGE B4-5	SELECTION PAGE B4-6	ACCESSORIES PAGE B4-98

SELECTION/DIMENSIONS

Setscrew Ball Bearings
SC NORMAL DUTY 2-BOLT FLANGE BEARINGS

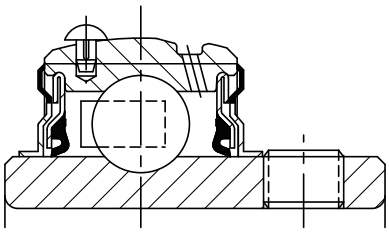

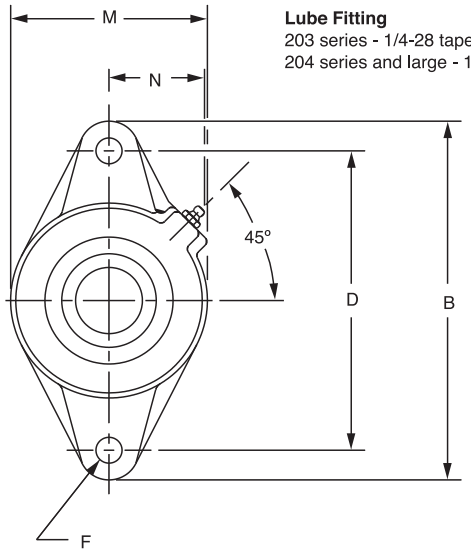

Lube Fitting
203 series - 1/4-28 tapered thread
204 series and large - 1/8-27 NPT

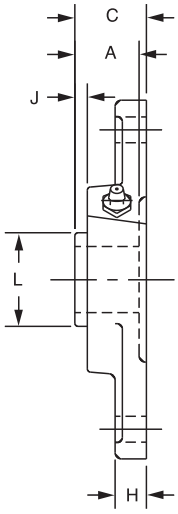

Series	Shaft Size	Standard		No-Lube/Sealed for Life (-NL)	
		Part No.	Description	Part No.	Description
203	1/2	**124198**	F2B-SC-008	**@**	F2B-SC-008-NL
	5/8	**124199**	F2B-SC-010	**124256**	F2B-SC-010-NL
	17mm	***125875***	*F2B-SC-17M*	**@**	*F2B-SC-17M-NL*
204	1/2	**124166**	F2B-SC-008L	**052220**	F2B-SC-008L-NL
	5/8	**124167**	F2B-SC-010L	**124176**	F2B-SC-010L-NL
	3/4	**124170**	F2B-SC-012	**124175**	F2B-SC-012-NL
	20mm	***125876***	*F2B-SC-20M*	***050119***	*F2B-SC-20M-NL*
205	7/8	**124171**	F2B-SC-014	**126516**	F2B-SC-014-NL
	15/16	**124172**	F2B-SC-015	**073662**	F2B-SC-015-NL
	1	**124173**	F2B-SC-100	**124174**	F2B-SC-100-NL
	25mm	***125877***	*F2B-SC-25M*	***124785***	*F2B-SC-25M-NL*
206	1-1/16	**124410**	F2B-SC-101	**@**	F2B-SC-101-NL
	1-1/8	**124274**	F2B-SC-102	**065766**	F2B-SC-102-NL
	1-3/16	**124275**	F2B-SC-103	**124614**	F2B-SC-103-NL
	1-1/4	**123172**	F2B-SC-104S	**064656**	F2B-SC-104S-NL
	30mm	***125878***	*F2B-SC-30M*	***126102***	*F2B-SC-30M-NL*
207	1-1/4	**124276**	F2B-SC-104	**126518**	F2B-SC-104-NL
	1-5/16	**124411**	F2B-SC-105	**@**	F2B-SC-105-NL
	1-3/8	**124277**	F2B-SC-106	**126519**	F2B-SC-106-NL
	1-7/16	**124278**	F2B-SC-107	**124618**	F2B-SC-107-NL
	35mm	***125879***	*F2B-SC-35M*	***067663***	*F2B-SC-35M-NL*

@Assembled to order



Setscrew Ball Bearings
SC NORMAL DUTY 2-BOLT FLANGE BEARINGS

Series	Shaft Size	Weight lbs. kgs.	A	B	C	D	F Bolt Dia.	H	J	L	M	N
203	1/2	0.8	1.00	3.88	1.17	3.00	3/8	0.38	0.32	0.96	2.13	1.13
	5/8	0.7										
	17mm	*0.3*	*25.4*	*98.6*	*29.7*	*76.2*	*M10*	*9.7*	*8.1*	*24.4*	*54.1*	*28.7*
204	1/2	1.6	*1.23*	*4.41*	*1.34*	*3.53*	*3/8*	*0.50*	*0.36*	*1.12*	*2.38*	*1.50*
	5/8	1.5										
	3/4	1.4										
	20mm	*0.5*	*31.2*	*112.0*	*34.0*	*89.7*	*M10*	*12.7*	*9.1*	*28.4*	*60.5*	*38.1*
205	7/8	1.6	1.34	4.88	1.37	3.89	7/16	0.52	0.42	1.32	2.75	1.44
	15/16	1.5										
	1	1.4										
	25mm	*0.6*	*34.0*	*124.0*	*34.8*	*98.8*	*M10*	*13.2*	*10.7*	*33.5*	*69.9*	*36.6*
206	1-1/16	2.3	*1.52*	*5.56*	*1.56*	*4.59*	*7/16*	*0.50*	*0.49*	*1.57*	*3.13*	*1.56*
	1-1/8	2.2										
	1-3/16	2.1										
	1-1/4	2.0										
	30mm	*1.0*	*38.6*	*141.2*	*39.6*	*116.7*	*M10*	*12.7*	*12.4*	*39.9*	*79.5*	*39.6*
207	1-1/4	3.5	1.71	6.13	1.75	5.12	1/2	0.56	0.53	1.84	3.75	1.84
	1-5/16	3.4										
	1-3/8	3.2										
	1-7/16	3.1										
	35mm	*1.5*	*43.4*	*155.7*	*44.5*	*130.0*	*M12*	*14.2*	*13.5*	*46.7*	*95.3*	*46.7*

FEATURES/BENEFITS PAGE B4-3	HOW TO ORDER/NOMENCLATURE PAGE B4-5	SELECTION PAGE B4-6	ACCESSORIES PAGE B4-98

SELECTION/DIMENSIONS

Setscrew Ball Bearings
SC NORMAL DUTY 2-BOLT FLANGE BEARINGS

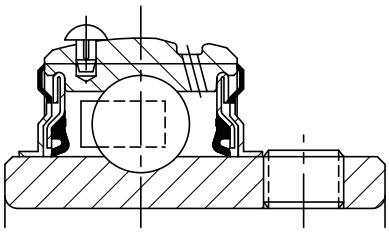

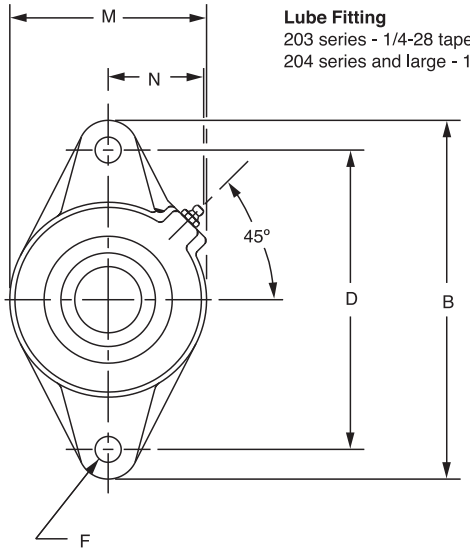

Lube Fitting
203 series - 1/4-28 tapered thread
204 series and large - 1/8-27 NPT

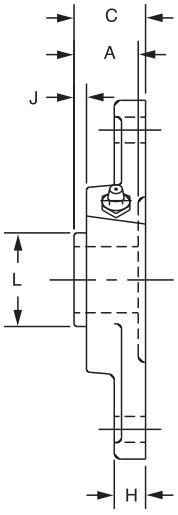

Series	Shaft Size	Standard		No-Lube/Sealed for Life (-NL)	
		Part No.	Description	Part No.	Description
208	1-1/2	**124268**	F2B-SC-108	**052011**	F2B-SC-108-NL
	1-5/8	**124412**	F2B-SC-110	**@**	F2B-SC-110-NL
	40mm	***125880***	*F2B-SC-40M*	***126042***	*F2B-SC-40M-NL*
209	1-5/8	**125171**	F2B-SC-110L	**@**	F2B-SC-110L-NL
	1-11/16	**124279**	F2B-SC-111	**067666**	F2B-SC-111-NL
	1-3/4	**124413**	F2B-SC-112	**126521**	F2B-SC-112-NL
	1-13/16	**124280**	F2B-SC-113	**067019**	F2B-SC-113-NL
	45mm	***125881***	*F3B-SC-45M*	**@**	*F2B-SC-45M-NL*
210	1-15/16	**124269**	F2B-SC-115	**126522**	F2B-SC-115-NL
	2	**124270**	F2B-SC-200	**126523**	F2B-SC-200-NL
	50mm	***125882***	*F2B-SC-50M*	***124282***	*F2B-SC-50M-NL*
211	2	**126293**	F2B-SCM-200	**065595**	F2B-SCM-200-NL
	2-3/16	**124034**	F2B-SC-203	**067959**	F2B-SC-203-NL
	2-1/4	**124373**	F2B-SC-204	**@**	F2B-SC-204-NL
	55mm	***124942***	*F2B-SC-55M*	**@**	*F2B-SC-55M-NL*
212	2-1/4	**@**	F2B-SCM-204	**093733**	F2B-SCM-204-NL
	2-7/16	**053175**	F2B-SC-207	**049437**	F2B-SC-207-NL
	60mm	***053883***	*F2B-SC-60M*	**@**	*F2B-SC-60M-NL*

@Assembled to order



Setscrew Ball Bearings
SC NORMAL DUTY 2-BOLT FLANGE BEARINGS

Series	Shaft Size	Weight lbs. kgs.	A	B	C	D	F Bolt Dia.	H	J	L	M	N
208	1-1/2	4.1	1.94	6.75	1.97	5.66	1/2	0.56	0.63	2.05	4.13	1.83
	1-5/8	4.0										
	40mm	*1.8*	*49.3*	*171.5*	*50.0*	*143.8*	*M12*	*14.2*	*16.0*	*52.1*	*104.9*	*46.5*
209	1-5/8	5.2	*1.94*	*7.06*	*1.99*	*5.84*	*1/2*	*0.63*	*0.59*	*2.22*	*4.38*	*1.91*
	1-11/16	5.0										
	1-3/4	4.9										
	1-13/16	4.7										
	45mm	*2.2*	*49.3*	*179.3*	*50.5*	*148.3*	*M14*	*16.0*	*15.0*	*56.4*	*111.3*	*48.5*
210	1-15/16	5.4	1.94	7.44	2.02	6.19	1/2	0.63	0.55	2.43	4.56	2.03
	2	5.2										
	50mm	*2.5*	*49.3*	*189.0*	*51.3*	*157.2*	*M16*	*16.0*	*14.0*	*61.7*	*115.8*	*51.6*
211	2	6.7	2.22	8.63	2.28	7.25	5/8	0.67	0.68	2.71	5.25	2.27
	2-3/16	6.5										
	2-1/4	6.3										
	55mm	*3.0*	*56.4*	*219.2*	*57.9*	*184.2*	*M16*	*17.0*	*17.3*	*68.8*	*133.4*	*57.7*
212	2-1/4	7.4	2.31	9.81	2.38	7.96	5/8	0.81	0.66	2.97	5.50	2.47
	2-7/16	7.0										
	60mm	*3.4*	*58.7*	*249.2*	*60.5*	*202.1*	*M22*	*20.6*	*16.8*	*75.4*	*139.7*	*62.7*

SELECTION/DIMENSIONS



Setscrew Ball Bearings

SCAH NORMAL DUTY AIR HANDLING 2-BOLT FLANGE BEARINGS

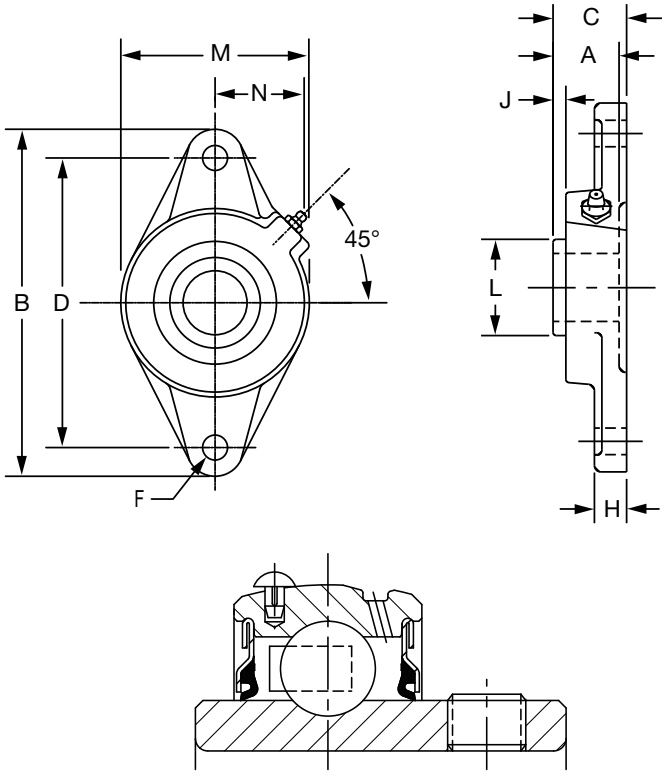

Series	Shaft Size	Part No.	Description
203	1/2	@	F2B-SCAH-008
	5/8	**049742**	F2B-SCAH-010
	17mm	***056902***	*F2B-SCAH-17M*
204	1/2	@	F2B-SCAH-008L
	5/8	@	F2B-SCAH-010L
	3/4	**123730**	F2B-SCAH-012
	20mm	***076602***	*F2B-SCAH-20M*
205	7/8	@	F2B-SCAH-014
	15/16	**124244**	F2B-SCAH-015
	1	**123731**	F2B-SCAH-100
	25mm	@	*F2B-SCAH-25M*
206	1-1/16	@	F2B-SCAH-101
	1-1/8	@	F2B-SCAH-102
	1-3/16	**123732**	F2B-SCAH-103
	1-1/4	**123184**	F2B-SCAH-104S
	30mm	@	*F2B-SCAH-30M*
207	1-1/4	**123733**	F2B-SCAH-104
	1-5/16	@	F2B-SCAH-105
	1-3/8	@	F2B-SCAH-106
	1-7/16	**123734**	F2B-SCAH-107
	35mm	@	*F2B-SCAH-35M*

@ Assembled to order

Series	Shaft Size	Weight lbs. kgs.	A	B	C	D	F	H	J	L	M	N
203	1/2	0.8	1.00	3.88	1.17	3.00	3/8	0.38	0.32	0.96	2.13	1.13
	5/8	0.7										
	17mm	*0.3*	*25.4*	*98.6*	*29.7*	*76.2*	*M10*	*9.7*	*8.1*	*24.4*	*54.1*	*28.7*
204	1/2	1.6	1.23	4.41	1.34	3.53	3/8	0.50	0.36	1.12	2.38	1.50
	5/8	1.5										
	3/4	1.4										
	20mm	*0.5*	*31.2*	*112.0*	*34.0*	*89.7*	*M10*	*12.7*	*9.1*	*28.4*	*60.5*	*38.1*
205	7/8	1.6	1.34	4.88	1.37	3.89	7/16	0.52	0.42	1.32	2.75	1.44
	15/16	1.5										
	1	1.4										
	25mm	*0.6*	*34.0*	*124.0*	*34.8*	*98.8*	*M10*	*13.2*	*10.7*	*33.5*	*69.9*	*36.6*
206	1-1/16	2.0	1.52	5.56	1.56	4.59	7/16	0.50	0.49	1.57	3.13	1.56
	1-1/8	2.2										
	1-3/16	2.1										
	1-1/4	2.0										
	30mm	*1.0*	*38.6*	*141.2*	*39.6*	*116.7*	*M10*	*12.7*	*12.4*	*39.9*	*79.5*	*39.6*
207	1-1/4	3.5	1.71	6.13	1.75	5.12	1/2	0.56	0.53	1.84	3.75	1.84
	1-5/16	3.45										
	1-3/8	3.2										
	1-7/16	3.1										
	35mm	*1.5*	*43.4*	*155.7*	*44.5*	*130.0*	*M12*	*14.2*	*13.5*	*46.7*	*95.3*	*46.7*



Setscrew Ball Bearings
SCAH NORMAL DUTY AIR HANDLING 2-BOLT FLANGE BEARINGS

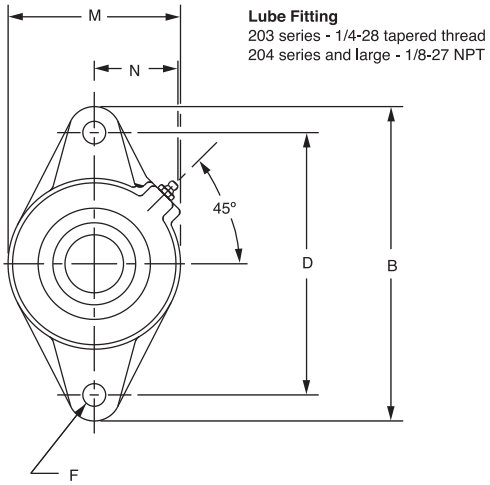

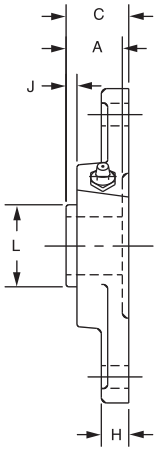

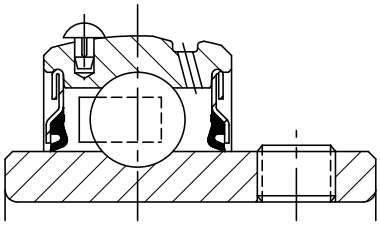

Series	Shaft Size	Part No.	Description
208	1-1/2	**123735**	F2B-SCAH-108
	1-5/8	**@**	F2B-SCAH-110
	40mm	**@**	*F2B-SCAH-40M*
209	1-5/8	**@**	F2B-SCAH-110L
	1-11/16	**123736**	F2B-SCAH-111
	1-3/4	**123737**	F2B-SCAH-112
	45mm	**@**	*F2B-SCAH-45M*
210	1-15/16	**123738**	F2B-SCAH-115
	2	**@**	F2B-SCAH-200
	50mm	**@**	*F2B-SCAH-50M*
211	2	**@**	F2B-SCMAH-200
	2/3/16	**124794**	F2B-SCAH-203
	2-1/4	**@**	F2B-SCAH-204
	55mm	**@**	*F2B-SCAH-55M*
212	2-1/4	**@**	F2B-SCMAH-204
	2-7/16	**057707**	F2B-SCAH-207
	60mm	**@**	*F2B-SCAH-60M*

@ Assembled to order

Series	Shaft Size	Weight lbs. kgs.	A	B	C	D	F Bolt Dia.	H	J	L	M	N
208	1-1/2	4.1	1.94	6.75	1.97	5.66	1/2	0.56	0.63	2.05	4.13	1.83
	1-5/8	4.0										
	40mm	*1.8*	*49.3*	*171.5*	*50.0*	*143.8*	*M12*	*14.2*	*16.0*	*52.1*	*104.9*	*46.5*
209	1-5/8	5.2	1.94	7.06	1.99	5.84	1/2	0.63	0.59	2.22	4.38	1.91
	1-11/16	5.0										
	1-3/4	4.9										
	45mm	*2.2*	*49.3*	*179.3*	*50.5*	*148.3*	*M14*	*16.0*	*15.0*	*56.4*	*111.3*	*48.5*
210	1-15/16	5.4	1.94	7.44	2.02	6.19	1/2	0.63	0.55	2.43	4.56	2.03
	2	5.2										
	50mm	*2.5*	*49.3*	*189.0*	*51.3*	*157.2*	*M16*	*16.0*	*14.0*	*61.7*	*115.8*	*51.6*
211	2	6.7	2.22	8.63	2.28	7.25	5/8	0.67	0.68	2.71	5.25	2.27
	2/3/16	6.4										
	2-1/4	6.3										
	55mm	*3.0*	*56.4*	*219.2*	*57.9*	*184.2*	*M16*	*17.0*	*17.3*	*68.8*	*133.4*	*57.7*
212	2-1/4	7.4	2.31	9.81	2.38	7.96	5/8	0.81	0.66	2.97	5.50	2.47
	2-7/16	7.0										
	60mm	*3.4*	*58.7*	*249.2*	*60.5*	*202.1*	*M22*	*20.6*	*16.8*	*75.4*	*139.7*	*62.7*

FEATURES/BENEFITS PAGE B4-3	HOW TO ORDER/NOMENCLATURE PAGE B4-5	SELECTION PAGE B4-6	ACCESSORIES PAGE B4-98

SELECTION/DIMENSIONS

Setscrew Ball Bearings

SC NORMAL DUTY 2-BOLT PILOTED FLANGE BEARINGS

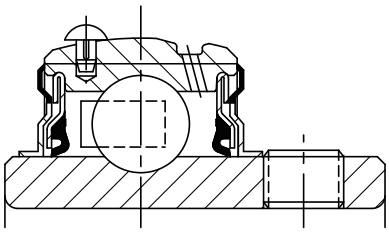

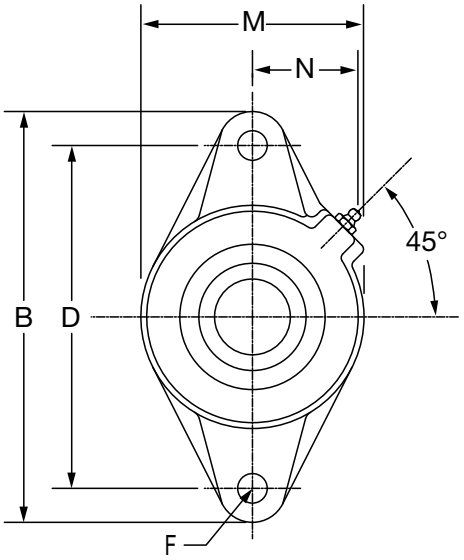

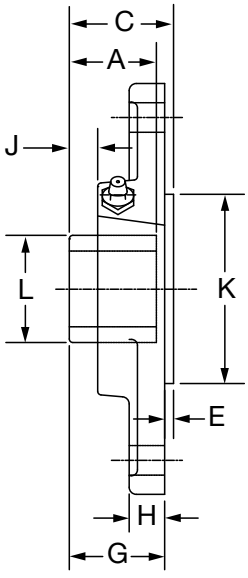

Series	Shaft Size	Part No.	Description
204	1/2	@	F2BZ-SC-008L
	5/8	**064775**	F2BZ-SC-010L
	3/4	**062648**	F2BZ-SC-012
	20mm	***130367***	*F2BZ-SC-20M*
205	7/8	**068915**	F2BZ-SC-014
	15/16	@	F2BZ-SC-015
	1	**056929**	F2BZ-SC-100
	25mm	***130368***	*F2BZ-SC-25M*
206	1-1/8	**049926**	F2BZ-SC-102
	1-3/16	**064480**	F2BZ-SC-103
	1-1/4	**064361**	F2BZ-SC-104S
	30mm	***130369***	*F2BZ-SC-30M*
207	1-1/4	**064089**	F2BZ-SC-104
	1-3/8	**068937**	F2BZ-SC-106
	1-7/16	**065565**	F2BZ-SC-107
	35mm	***130370***	*F2BZ-SC-35M*
208	1-1/2	**062686**	F2BZ-SC-108
	1-5/8	@	F2BZ-SC-110
	40mm	***130371***	*F2BZ-SC-40M*
209	1-5/8	@	F2BZ-SC-110L
	1-11/16	**068839**	F2BZ-SC-111
	1-3/4	@	F2BZ-SC-112
	45mm	***130372***	*F2BZ-SC-45M*
210	1-15/16	**056845**	F2BZ-SC-115
	2	**074396**	F2BZ-SC-200
	50mm	***130373***	*F2BZ-SC-50M*

@ Assembled to order



Setscrew Ball Bearings
SC NORMAL DUTY 2-BOLT PILOTED FLANGE BEARINGS

Series	Shaft Size	Weight lbs kg	A	B	C	D	E	F Bolt Dia	G	H	J	K	L	M	N
204	1/2	1.2	1.23	4.41	1.39	3.53	0.14	3/8	1.26	0.50	0.41	2.165/2.163	1.12	2.38	1.50
	5/8	1.2													
	3/4	1.1													
	20mm	*0.3*	*31.2*	*112.0*	*35.3*	*89.7*	*3.6*	*M10*	*32.0*	*12.7*	*10.4*	*54.99/54.94*	*28.4*	*60.5*	*38.1*
205	7/8	1.4	1.34	4.88	1.51	3.89	0.14	7/16	1.37	0.52	0.42	2.362/2.360	1.32	2.75	1.44
	15/16	1.4													
	1	1.4													
	25mm	*0.6*	*34.0*	*124.0*	*38.4*	*98.8*	*3.6*	*M10*	*34.8*	*13.2*	*10.7*	*59.99/59.94*	*33.5*	*69.9*	*36.6*
206	1-1/8	1.8	1.52	5.56	1.68	4.59	0.12	7/16	1.56	0.50	0.49	3.150/3.148	1.57	3.13	1.56
	1-3/16	1.8													
	1-1/4	1.8													
	30mm	*0.8*	*38.6*	*141.2*	*42.7*	*116.7*	*3.0*	*M10*	*39.6*	*12.7*	*12.4*	*80.01/79.96*	*39.9*	*79.5*	*39.6*
207	1-1/4	2.7	1.71	6.13	1.91	5.12	0.16	1/2	1.75	0.56	0.53	3.543/3.541	1.84	3.75	1.84
	1-3/8	2.6													
	1-7/16	2.6													
	35mm	*1.2*	*43.4*	*155.7*	*48.5*	*130.0*	*4.1*	*M12*	*44.5*	*14.2*	*13.5*	*89.99/89.94*	*46.7*	*95.3*	*46.7*
208	1-1/2	3.9	1.94	6.75	2.13	5.66	0.16	1/2	1.98	0.56	0.63	3.937/3.935	2.05	4.13	1.83
	1-5/8	3.8													
	40mm	*1.7*	*49.3*	*171.5*	*54.1*	*143.8*	*4.1*	*M12*	*50.3*	*14.2*	*16.0*	*100.00/99.95*	*52.1*	*104.9*	*46.5*
209	1-5/8	4.2	1.94	7.06	2.15	5.84	0.16	1/2	1.99	0.63	0.59	4.134/4.132	2.22	4.38	1.91
	1-11/16	4.1													
	1-3/4	4.1													
	45mm	*2.5*	*49.3*	*179.3*	*54.6*	*148.3*	*4.1*	*M14*	*50.5*	*16.0*	*15.0*	*105.00/104.95*	*56.4*	*111.3*	*48.5*
210	1-15/16	3.6	1.94	7.44	2.18	6.19	0.16	1/2	2.02	0.63	0.55	4.134/4.132	2.43	4.56	2.03
	2	4.4													
	50mm	*2.6*	*49.3*	*189.0*	*55.4*	*157.2*	*4.1*	*M16*	*51.3*	*16.0*	*14.0*	*105.00/104.95*	*61.7*	*115.8*	*51.6*

FEATURES/BENEFITS PAGE B4-3	HOW TO ORDER/NOMENCLATURE PAGE B4-5	SELECTION PAGE B4-6	ACCESSORIES PAGE B4-98

SELECTION/DIMENSIONS

Setscrew Ball Bearings
SCM MEDIUM DUTY 2-BOLT FLANGE BEARINGS

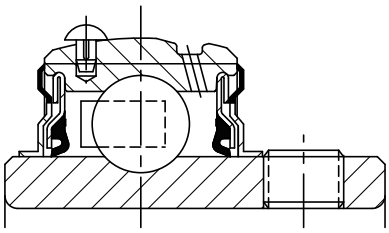

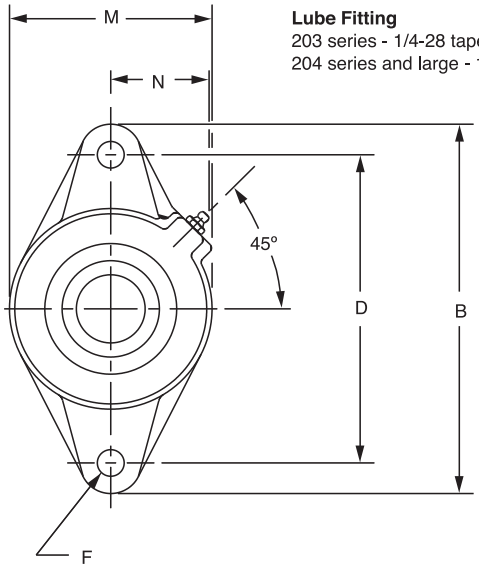

Lube Fitting
203 series - 1/4-28 tapered thread
204 series and large - 1/8-27 NPT

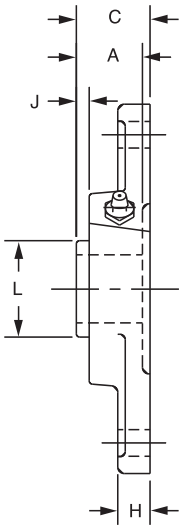

Series	Shaft Size	Standard		Sealed for Life	
		Part No.	Description	Part No.	Description
206	1	**126284**	F2B-SCM-100	**@**	F2B-SCM-100-NL
	25mm	***125954***	*F2B-SCM-25M*	**@**	*F2B-SCM-25M-NL*
207	1-3/16	**126285**	F2B-SCM-103	**@**	F2B-SCM-103-NL
	1-1/4	**124276**	F2B-SC-104	**126518**	F2B-SC-104-NL
	30mm	***125955***	*F2B-SCM-30M*	**@**	*F2B-SCM-30M-NL*
208	1-7/16	**126287**	F2B-SCM-107	**@**	F2B-SCM-107-NL
	35mm	***125956***	*F2B-SCM-35M*	**@**	*F2B-SCM-35M-NL*
209	1-1/2	**126288**	F2B-SCM-108	**126536**	F2B-SCM-108-NL
	1-5/8	**125171**	F2B-SC-110L	**@**	F2B-SC-110L-NL
	40mm	***125957***	*F2B-SCM-40M*	***067674***	*F2B-SCM-40M-NL*
210	1-11/16	**126289**	F2B-SCM-111	**@**	F2B-SCM-111-NL
	1-3/4	**126290**	F2B-SCM-112	**@**	F2B-SCM-112-NL
	45mm	***125958***	*F2B-SCM-45M*	**@**	*F2B-SCM-45M-NL*
211	1-15/16	**126292**	F2B-SCM-115	**@**	F2B-SCM-115-NL
	2	**126293**	F2B-SCM-200	**065595**	F2B-SCM-200-NL
	50mm	***125960***	*F2B-SCM-50M*	**@**	*F2B-SCM-50M-NL*
212	2-3/16	**062746**	F2B-SCM-203	**@**	F2B-SCM-203-NL
	2-1/4	**073492**	F2B-SCM-204	**@**	F2B-SCM-204-NL
	55mm	***@***	*F2B-SCM-55M*	**@**	*F2B-SCM-55M-NL*

@ Assembled to order



Setscrew Ball Bearings
SCM MEDIUM DUTY 2-BOLT FLANGE BEARINGS

Series	Shaft Size	Weight lbs. kgs.	A	B	C	D	F Bolt Dia.	H	J	L	M	N
206	1	2.4	1.52	5.56	1.56	4.59	7/16	0.50	0.49	1.57	3.13	1.56
	25mm	*1.0*	*38.6*	*141.2*	*39.6*	*116.7*	*M10*	*12.7*	*12.4*	*39.9*	*79.5*	*39.6*
207	1-3/16	3.6	1.71	6.13	1.75	5.12	1/2	0.56	0.53	1.84	3.75	1.84
	1-1/4	3.5										
	30mm	*1.6*	*43.4*	*155.7*	*44.5*	*130.0*	*M12*	*14.2*	*13.5*	*46.7*	*95.3*	*46.7*
208	1-7/16	4.1	1.94	6.75	1.98	5.66	1/2	0.56	0.63	2.05	4.13	1.83
	35mm	*1.9*	*49.3*	*171.5*	*50.3*	*143.8*	*M12*	*14.2*	*16.0*	*52.1*	*104.9*	*46.5*
209	1-1/2	5.3	1.94	7.06	1.99	5.84	1/2	0.63	0.59	2.22	4.38	1.91
	1-5/8	5.2										
	40mm	*2.3*	*49.3*	*179.3*	*50.5*	*148.3*	*M14*	*16.0*	*15.0*	*56.4*	*111.3*	*48.5*
210	1-11/16	5.8	1.94	7.44	2.02	6.19	1/2	0.63	0.55	2.43	4.56	2.03
	1-3/4	5.6										
	45mm	*2.6*	*49.3*	*189.0*	*51.3*	*157.2*	*M16*	*16.0*	*14.0*	*61.7*	*115.8*	*51.6*
211	1-15/16	6.7	2.22	8.63	2.28	7.25	5/8	0.67	0.68	2.71	5.25	2.27
	2	6.5										
	50mm	*2.9*	*56.4*	*219.2*	*57.9*	*184.2*	*M16*	*17.0*	*17.3*	*68.8*	*133.4*	*57.7*
212	2-3/16	7.4	2.31	9.81	2.38	7.96	5/8	0.81	0.66	2.97	5.50	2.47
	2-1/4	7.2										
	55mm	*3.2*	*58.7*	*249.2*	*60.5*	*202.1*	*M22*	*20.6*	*16.8*	*75.4*	*139.7*	*62.7*

SELECTION/DIMENSIONS

Setscrew Ball Bearings
SCMAH MEDIUM DUTY AIR HANDLING 2-BOLT FLANGE BEARINGS

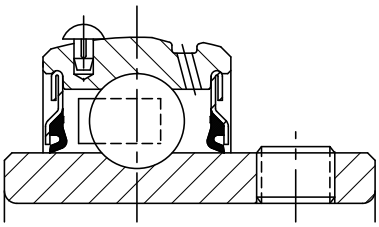

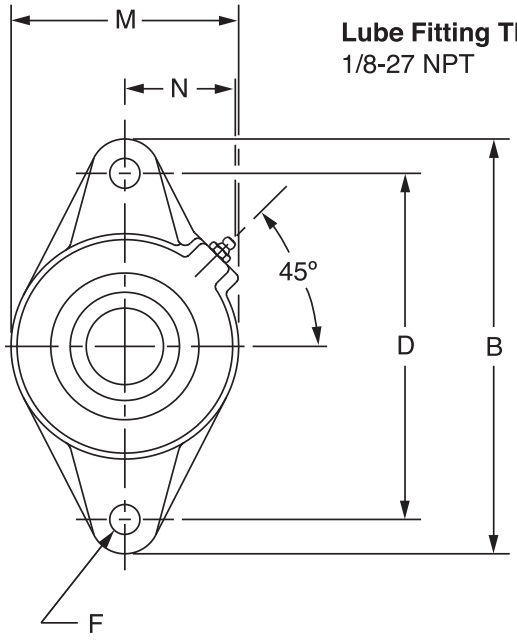

Lube Fitting Thread Size:
1/8-27 NPT

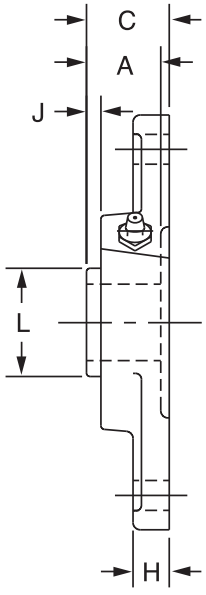

Series	Shaft Size	Part No.	Standard Description
206	1	**050498**	F2B-SCMAH-100
	25mm	**@**	*F2B-SCMAH-25M*
207	1-3/16	**050146**	F2B-SCMAH-103
	1-1/4	**123733**	F2B-SCAH-104
	30mm	**@**	*F2B-SCMAH-30M*
208	1-7/16	**123755**	F2B-SCMAH-107
	35mm	**@**	*F2B-SCMAH-35M*
209	1-1/2	**123756**	F2B-SCMAH-108
	1-5/8	**@**	F2B-SCAH-110L
	40mm	**@**	*F2B-SCMAH-40M*
210	1-11/16	**123757**	F2B-SCMAH-111
	1-3/4	**123758**	F2B-SCMAH-112
	45mm	**@**	*F2B-SCMAH-45M*
211	1-15/16	**064198**	F2B-SCMAH-115
	2	**@**	F2B-SCMAH-200
	50mm	**@**	*F2B-SCMAH-50M*
212	2-3/16	**@**	F2B-SCMAH-203
	2-1/4	**@**	F2B-SCMAH-204
	55mm	**@**	*F2B-SCMAH-55M*

@ Assembled to order



Series	Shaft Size	Weight lbs. kgs.	A	B	C	D	F Bolt Dia.	H	J	L	M	N
206	1	2.4	1.52	5.56	1.56	4.59	7/16	0.50	0.49	1.57	3.13	1.56
	25mm	*1.0*	*38.6*	*141.2*	*39.6*	*116.7*	*M10*	*12.7*	*12.4*	*39.9*	*79.5*	*39.6*
207	1-3/16	3.6	1.71	6.13	1.75	5.12	1/2	0.56	0.53	1.84	3.75	1.84
	1-1/4	3.5										
	30mm	*1.6*	*43.4*	*155.7*	*44.5*	*130.0*	*M12*	*14.2*	*13.5*	*46.7*	*95.3*	*46.7*
208	1-7/16	4.1	1.94	6.75	1.98	5.66	1/2	0.56	0.63	2.05	4.13	1.83
	35mm	1.9	49.3	171.5	50.3	143.8	M12	14.2	16.0	52.1	104.9	46.5
209	1-1/2	5.3	1.94	7.06	1.99	5.84	1/2	0.63	0.59	2.22	4.38	1.91
	1-5/8	5.2										
	40mm	*2.3*	*49.3*	*179.3*	*50.5*	*148.3*	*M14*	*16.0*	*15.0*	*56.4*	*111.3*	*48.5*
210	1-11/16	5.8	1.94	7.44	2.02	6.19	1/2	0.63	0.55	2.43	4.56	2.03
	1-3/4	5.6										
	45mm	*2.6*	*49.3*	*189.0*	*51.3*	*157.2*	*M16*	*16.0*	*14.0*	*61.7*	*115.8*	*51.6*
211	1-15/16	6.7	2.22	8.63	2.28	7.25	5/8	0.67	0.68	2.71	5.25	2.27
	2	6.5										
	50mm	*2.9*	*56.4*	*219.2*	*57.9*	*184.2*	*M16*	*17.0*	*17.3*	*68.8*	*133.4*	*57.7*
212	2-3/16	7.4	2.31	9.81	2.38	7.96	5/8	0.81	0.66	2.97	5.50	2.47
	2-1/4	7.2										
	55mm	*3.2*	*58.7*	*249.2*	*60.5*	*202.1*	*M22*	*20.6*	*16.8*	*75.4*	*139.7*	*62.7*

SELECTION/DIMENSIONS

Setscrew Ball Bearings
SC LFT DUTY 2-BOLT FLANGE BEARINGS

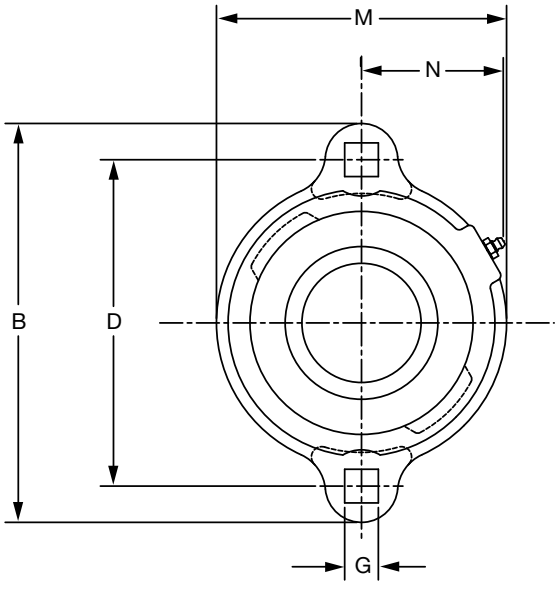

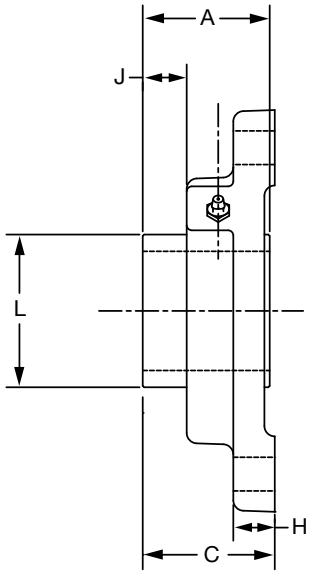

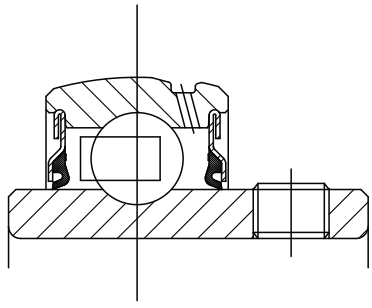

Series	Shaft Size	Standard		Sealed for Life (No Lube)	
		Part No.	Description	Part No.	Description
203	1/2	**124640**	LFT-SC-008	**124660**	LFT-SC-008-NL
	5/8	**124641**	LFT-SC-010	**124661**	LFT-SC-010-NL
	17mm	***130362***	*LFT-SC-17M*	**@**	*LFT-SC-17M-NL*
204	3/4	**124642**	LFT-SC-012	**124662**	LFT-SC-012-NL
	20mm	***130363***	*LFT-SC-20M*	***062260***	*LFT-SC-20M-NL*
205	7/8	**124643**	LFT-SC-014	**124663**	LFT-SC-014-NL
	15/16	**124644**	LFT-SC-015	**124664**	LFT-SC-015-NL
	1	**124645**	LFT-SC-100	**124665**	LFT-SC-100-NL
	25mm	***130364***	*LFT-SC-25M*	***068996***	*LFT-SC-25M-NL*
206	1-1/16	**124646**	LFT-SC-101	**124666**	LFT-SC-101-NL
	1-1/8	**124647**	LFT-SC-102	**124667**	LFT-SC-102-NL
	1-3/16	**124648**	LFT-SC-103	**124668**	LFT-SC-103-NL
	1-1/4	**124649**	LFT-SC-104S	**124669**	LFT-SC-104S-NL
	30mm	***130365***	*LFT-SC-30M*	**@**	*LFT-SC-30M-NL*
207	1-1/4	**124650**	LFT-SC-104	**124670**	LFT-SC-104-NL
	1-5/16	**124651**	LFT-SC-105	**124671**	LFT-SC-105-NL
	1-3/8	**124652**	LFT-SC-106	**124672**	LFT-SC-106-NL
	1-7/16	**124653**	LFT-SC-107	**124673**	LFT-SC-107-NL
	35mm	***130366***	*LFT-SC-35M*	**@**	*LFT-SC-35M-NL*

* No lube fitting required in the SCLFT NoLube

@ Assembled to order.



Setscrew Ball Bearings
SC LFT DUTY 2-BOLT FLANGE BEARINGS

Series	Shaft Size	Weight lbs. kgs.	A	B	C	D	G	H	J	L	M	N
203	1/2	0.60	1.00	3.19	1.05	2.50	0.28	0.38	0.33	0.96	2.13	1.23
	5/8	0.55										
	17mm	*0.27*	*25.4*	*81.0*	*26.7*	*63.5*	*7.1*	*9.7*	*8.4*	*24.4*	*54.1*	*31.2*
204	3/4	0.80	1.02	3.56	1.21	2.81	0.34	0.42	0.36	1.12	2.38	1.34
	20mm	*0.36*	*25.9*	*90.4*	*30.7*	*71.4*	*8.6*	*10.7*	*9.1*	*28.4*	*60.5*	*34.0*
205	7/8	0.95	1.06	3.75	1.24	3.00	0.34	0.42	0.37	1.32	2.63	1.44
	15/16	0.90										
	1	0.85										
	25mm	*0.43*	*26.9*	*95.3*	*31.5*	*76.2*	*8.6*	*10.7*	*9.4*	*33.5*	*66.8*	*36.6*
206	1-1/16	1.50	1.26	4.44	1.45	3.56	0.41	0.47	0.46	1.57	3.25	1.72
	1-1/8	1.45										
	1-3/16	1.40										
	1-1/4	1.35										
	30mm	*0.67*	*32.0*	*112.8*	*36.8*	*90.4*	*10.4*	*11.9*	*11.7*	*39.9*	*82.6*	*43.7*
207	1-1/4	1.85	1.40	4.82	1.59	3.94	0.41	0.50	0.52	1.84	3.50	1.83
	1-5/16	1.80										
	1-3/8	1.75										
	1-7/16	1.70										
	35mm	*0.81*	*35.6*	*122.4*	*40.4*	*100.1*	*10.4*	*12.7*	*13.2*	*46.7*	*88.9*	*46.5*

FEATURES/BENEFITS PAGE B4-3	HOW TO ORDER/NOMENCLATURE PAGE B4-5	SELECTION PAGE B4-6	ACCESSORIES PAGE B4-98

SELECTION/DIMENSIONS

Setscrew Ball Bearings
SL LIGHT DUTY 2-BOLT FLANGE BEARINGS

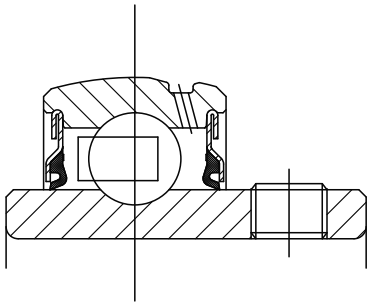

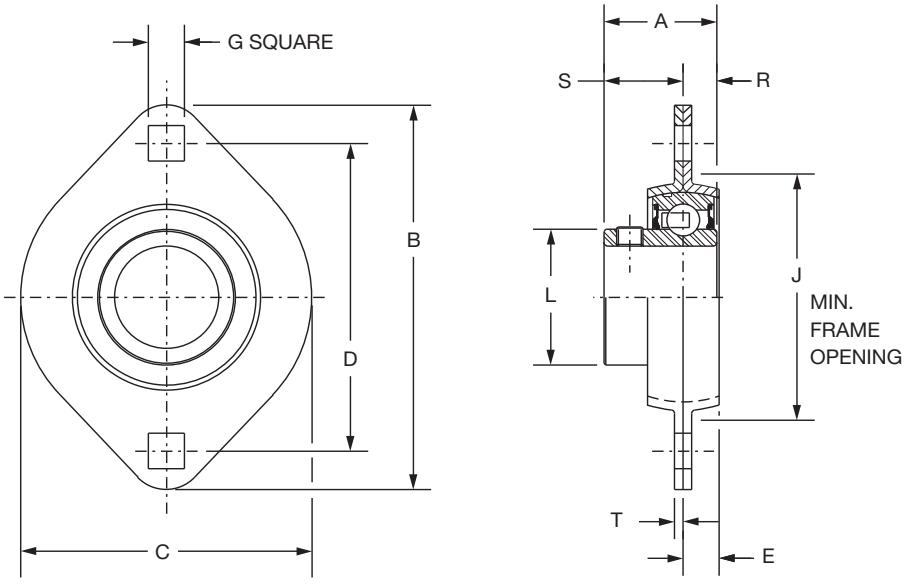

Series	Shaft Size	Part No.	Description
203	1/2	**128151**	F2B-SL-008
	5/8	**128154**	F2B-SL-010
	17mm	***068789***	*F2B-SL-17M*
204	3/4	**128092**	F2B-SL-012
	20mm	***074287***	*F2B-SL-20M*
205	7/8	**128174**	F2B-SL-014
	15/16	**128175**	F2B-SL-015
	1	**128093**	F2B-SL-100
	25mm	***074288***	*F2B-SL-25M*
206	1-1/8	**128176**	F2B-SL-102
	1-3/16	**128094**	F2B-SL-103
	1-1/4	**128097**	F2B-SL-104S
	30mm	***@***	*F2B-SL-30M*
207	1-1/4	**128095**	F2B-SL-104
	1-3/8	**128177**	F2B-SL-106
	1-7/16	**128096**	F2B-SL-107
	35mm	***068532***	*F2B-SL-35M*



Setscrew Ball Bearings
SL LIGHT DUTY 2-BOLT FLANGE BEARINGS

Series	Shaft Size	Weight lbs. kgs.	A	B	C	D	E	G	J	L	R	S	T
203	1/2	0.45	1.00	3.19	2.31	2.54	0.28	0.28	1.94	0.96	0.36	0.64	0.08
	5/8	0.42											
	17mm	*0.20*	*25.4*	*81.0*	*58.7*	*64.5*	*7.1*	*7.1*	*49.3*	*24.4*	*9.1*	*16.3*	*2.0*
204	3/4	0.55	*1.02*	*3.56*	*2.63*	*2.81*	*0.31*	*0.34*	*2.19*	*1.12*	*0.29*	*0.73*	*0.08*
	20mm	*0.25*	*25.9*	*90.4*	*66.8*	*71.4*	*7.9*	*8.6*	*55.6*	*28.4*	*7.4*	*18.5*	*2.0*
205	7/8	0.891	*1.06*	*3.75*	*2.80*	*3.00*	*0.34*	*0.34*	*2.38*	*1.32*	*0.30*	*0.76*	*0.08*
	15/16	0.77											
	1	0.65											
	25mm	*0.34*	*26.9*	*95.3*	*71.1*	*76.2*	*8.6*	*8.6*	*60.5*	*33.5*	*7.6*	*19.3*	*2.0*
206	1-1/8	1.05	1.26	4.44	3.31	3.56	0.34	0.41	2.81	1.57	0.35	0.91	0.10
	1-3/16	1.02											
	1-1/4	1.00											
	30mm	*0.46*	*32.0*	*112.8*	*84.1*	*90.4*	*8.6*	*10.4*	*71.4*	*39.9*	*8.9*	*23.1*	*2.5*
207	1-1/4	1.53	*1.40*	*4.94*	*3.69*	*3.94*	*0.44*	*0.41*	*3.19*	*1.84*	*0.37*	*1.03*	*0.10*
	1-3/8	1.5											
	1-7/16	1.37											
	35mm	*0.67*	*35.6*	*125.5*	*93.7*	*100.1*	*11.2*	*10.4*	*81.0*	*46.7*	*9.4*	*26.2*	*2.5*

FEATURES/BENEFITS PAGE B4-3	HOW TO ORDER/NOMENCLATURE PAGE B4-5	SELECTION PAGE B4-6	ACCESSORIES PAGE B4-98

SELECTION/DIMENSIONS

DODGE®



Setscrew Ball Bearings

SC FB NORMAL DUTY 3-BOLT FLANGED BRACKET BEARINGS

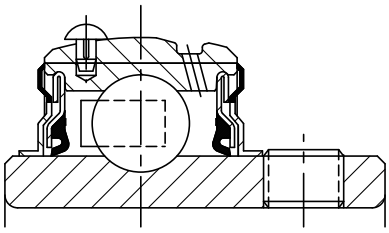

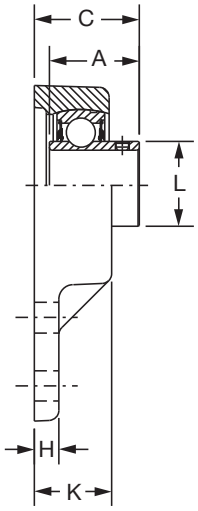

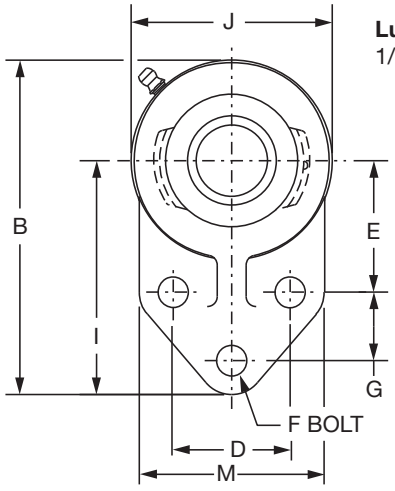

Lube Fitting Thread Size:
1/8-27 NPT

Series	Shaft Size	Standard		No Lube/Sealed for Life (-NL)	
		Part No.	Description	Part No.	Description
204	1/2	**124435**	FB-SC-008	**068720**	FB-SC-008-NL
	5/8	**124436**	FB-SC-010	**059816**	FB-SC-010-NL
	3/4	**124437**	FB-SC-012	**058544**	FB-SC-012-NL
205	7/8	**124438**	FB-SC-014	**056765**	FB-SC-014-NL
	15/16	**124439**	FB-SC-015	**@**	FB-SC-015-NL
	1	**124440**	FB-SC-100	**051774**	FB-SC-100-NL
206	1-1/16	**124441**	FB-SC-101	**@**	FB-SC-101-NL
	1-1/8	**124442**	FB-SC-102	**@**	FB-SC-102-NL
	1-3/16	**124443**	FB-SC-103	**049615**	FB-SC-103-NL
	1-1/4	**124444**	FB-SC-104S	**124450**	FB-SC-104S-NL
207	1-1/4	**124445**	FB-SC-104	**058545**	FB-SC-104-NL
	1-5/16	**124446**	FB-SC-105	**@**	FB-SC-105-NL
	1-3/8	**124447**	FB-SC-106	**@**	FB-SC-106-NL
	1-7/16	**124448**	FB-SC-107	**052016**	FB-SC-107-NL
210	1-11/16	**052906**	FB-SCM-111	**068840**	FB-SCM-111-NL
	1-15/16	**052094**	FB-SC-115	**073669**	FB-SC-115-NL
	2	**058529**	FB-SC-200	**073139**	FB-SC-200-NL

@ Assembled to order.



Setscrew Ball Bearings

SC FB NORMAL DUTY 3-BOLT FLANGED BRACKET BEARINGS

Series	Shaft Size	Weight lbs. kgs.	A	B	C	D	E	F Bolt Dia.	G	H	I	J	K	L	M
	1/2	1.51	1.23	4.25	1.34	1.50	1.69	3/8	0.88	0.31	3.00	2.50	0.98	1.12	2.38
204	5/8	1.48													
	3/4	1.45	31.2	108.0	34.0	38.1	42.9	M10	22.4	7.9	76.2	63.5	24.9	28.4	60.5
	7/8	1.81	1.34	4.75	1.51	1.63	1.81	3/8	1.13	0.38	3.38	2.75	1.11	1.32	2.50
205	15/16	1.78													
	1	1.75	34.0	120.7	38.4	41.4	46.0	M10	28.7	9.7	85.9	69.9	28.2	33.5	63.5
	1-1/16	2.12	1.52	5.38	1.65	1.88	2.06	3/8	1.25	0.38	3.75	3.25	1.13	1.57	2.75
206	1-1/8	2.08													
	1-3/16	2.05													
	1-1/4	2.02	38.6	136.7	41.9	47.8	52.3	M10	31.8	9.7	95.3	82.6	28.7	39.9	69.9
	1-1/4	3.46	1.71	6.13	1.88	2.00	2.37	1/2	1.25	0.50	4.25	3.75	1.31	1.84	3.25
207	1-5/16	3.41													
	1-3/8	3.36													
	1-7/16	3.30	43.4	155.7	47.8	50.8	60.2	M12	31.8	12.7	108.0	95.3	33.3	46.7	82.6
	1-11/16	5.70	1.94	7.50	2.06	2.75	2.94	1/2	1.63	0.50	5.19	4.63	1.50	2.43	4.00
210	1-15/16	5.50													
	2	5.40	49.3	190.5	52.3	69.9	74.7	M12	41.4	12.7	131.8	117.6	38.1	61.7	101.6

FEATURES/BENEFITS PAGE B4-3	HOW TO ORDER/NOMENCLATURE PAGE B4-5	SELECTION PAGE B4-6	ACCESSORIES PAGE B4-98

SELECTION/DIMENSIONS

DODGE®



Setscrew Ball Bearings

SC LF NORMAL DUTY 3-BOLT FLANGE BEARINGS

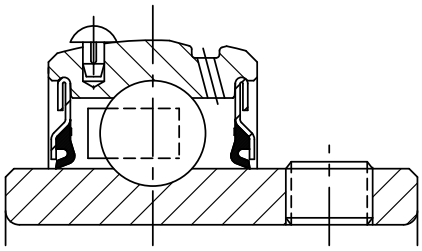

Lube Fitting Thread Size:
203 - 204 series - 1/4-28 tapered thread
207 - 207 series - 1/8-27 NPT

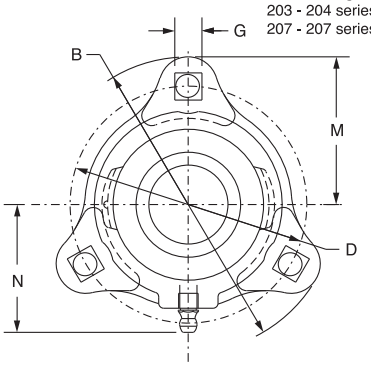

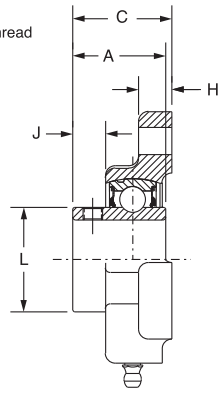

Series	Shaft Size	Standard		Sealed for Life (No Lube)	
		Part No.	Description	Part No.	Description
203	1/2	**124600**	LF-SC-008	**124620**	LF-SC-008-NL
	5/8	**124601**	LF-SC-010	**124621**	LF-SC-010-NL
	17mm	***050895***	*LF-SC-17M*	**@**	*LF-SC-17M-NL*
204	3/4	**124602**	LF-SC-012	**124622**	LF-SC-012-NL
	20mm	***124934***	*LF-SC-20M*	***125384***	*LF-SC-20M-NL*
205	7/8	**124603**	LF-SC-014	**124623**	LF-SC-014-NL
	15/16	**124604**	LF-SC-015	**124624**	LF-SC-015-NL
	1	**124605**	LF-SC-100	**124625**	LF-SC-100-NL
	25mm	**@**	*LF-SC-25M*	**@**	*LF-SC-25M-NL*
206	1-1/16	**124606**	LF-SC-101	**124626**	LF-SC-101-NL
	1-1/8	**124607**	LF-SC-102	**124627**	LF-SC-102-NL
	1-3/16	**124608**	LF-SC-103	**124628**	LF-SC-103-NL
	1-1/4	**124609**	LF-SC-104S	**124629**	LF-SC-104S-NL
	30mm	***067892***	*LF-SC-30M*	**@**	*LF-SC-30M-NL*
207	1-1/4	**124610**	LF-SC-104	**124630**	LF-SC-104-NL
	1-5/16	**124611**	LF-SC-105	**124631**	LF-SC-105-NL
	1-3/8	**124612**	LF-SC-106	**124632**	LF-SC-106-NL
	1-7/16	**124613**	LF-SC-107	**124633**	LF-SC-107-NL
	35mm	***065699***	*LF-SC-35M*	**@**	*LF-SC-35M-NL*

@ Assembled to order.

Series	Shaft Size	Weight lbs. kgs.	A	B	C	D	G	H	J	L	M	N
203	1/2	0.65	1.00	3.19	1.05	2.50	0.28	0.38	0.33	0.96	1.59	1.84
	5/8	0.60										
	17mm	*0.29*	*25.4*	*81.0*	*26.7*	*63.5*	*7.1*	*9.7*	*8.4*	*24.4*	*40.4*	*46.7*
204	3/4	0.85	1.02	3.56	1.21	2.81	0.34	0.42	0.36	1.12	1.78	1.56
	20mm	*0.38*	*25.9*	*90.4*	*30.7*	*71.4*	*8.6*	*10.7*	*9.1*	*28.4*	*45.2*	*39.6*
205	7/8	1.10	1.06	3.75	1.24	3.00	0.34	0.42	0.37	1.32	1.88	1.70
	15/16	1.05										
	1	1.00										
	25mm	*0.47*	*26.9*	*95.3*	*31.5*	*76.2*	*8.6*	*10.7*	*9.4*	*33.5*	*47.8*	*43.2*
206	1-1/16	1.65	1.26	4.44	1.45	3.56	0.41	0.47	0.46	1.57	2.22	2.02
	1-1/8	1.60										
	1-3/16	1.55										
	1-1/4	1.50										
	30mm	*0.70*	*32.0*	*112.8*	*36.8*	*90.4*	*10.4*	*11.9*	*11.7*	*39.9*	*56.4*	*51.3*
207	1-1/4	2.10	1.40	4.81	1.59	3.94	0.41	0.50	0.52	1.84	2.41	2.14
	1-5/16	2.05										
	1-3/8	2.00										
	1-7/16	1.95										
	35mm	*0.90*	*35.6*	*122.2*	*40.4*	*100.1*	*10.4*	*12.7*	*13.2*	*46.7*	*61.2*	*54.4*

FEATURES/BENEFITS PAGE B4-3 | HOW TO ORDER/NOMENCLATURE PAGE B4-5 | SELECTION PAGE B4-6 | ACCESSORIES PAGE B4-98

DODGE®



Setscrew Ball Bearings
SL LIGHT DUTY 3-BOLT FLANGE BEARINGS

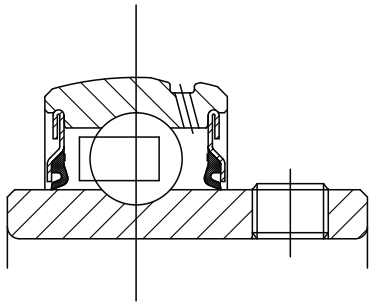

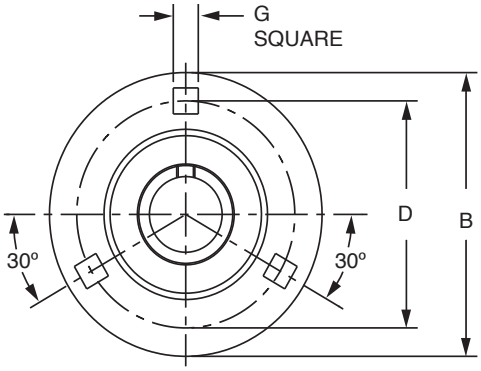

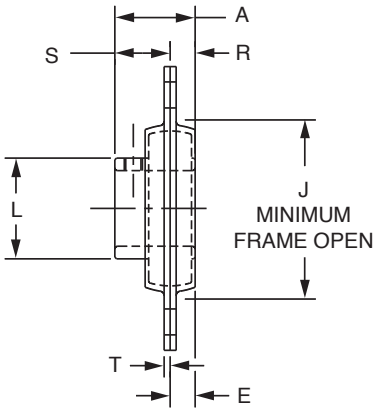

Series	Shaft Size	Part No.	Description
204	3/4	**128083**	F3B-SL-012
	20mm	**@**	*F3B-SL-20M*
205	7/8	**128178**	F3B-SL-014
	15/16	**128179**	F3B-SL-015
	1	**128084**	F3B-SL-100
	25mm	**@**	*F3B-SL-25M*
206	1-1/8	**128180**	F3B-SL-102
	1-3/16	**128085**	F3B-SL-103
	1-1/4	**128082**	F3B-SL-104S
	30mm	**@**	*F3B-SL-30M*
207	1-1/4	**128086**	F3B-SL-104
	1-3/8	**128181**	F3B-SL-106
	1-7/16	**128087**	F3B-SL-107
	35mm	**@**	*F3B-SL-35M*

@ Assembled to order.

Series	Shaft Size	Weight lbs. kgs.	A	B	D	E	G	J	L	R	S	T
204	3/4	0.74	1.02	3.56	2.81	0.31	0.34	2.19	1.12	0.29	0.73	0.08
	20mm	*0.33*	*25.9*	*90.4*	*71.4*	*7.9*	*8.6*	*55.6*	*28.4*	*7.4*	*18.5*	*2.0*
205	7/8	1.01	1.06	3.75	3.00	0.34	0.34	2.38	1.32	0.30	0.76	0.08
	15/16	0.97										
	1	0.85										
	25mm	*0.43*	*26.9*	*95.3*	*76.2*	*8.6*	*8.6*	*60.5*	*33.5*	*7.6*	*19.3*	*2.0*
206	1-1/8	1.39	1.26	4.44	3.56	0.34	0.41	2.81	1.57	0.35	0.91	0.10
	1-3/16	1.36										
	1-1/4	1.34										
	30mm	*0.61*	*32.0*	*112.8*	*90.4*	*8.6*	*10.4*	*71.4*	*39.9*	*8.9*	*23.1*	*2.5*
207	1-1/4	1.89	1.40	4.81	3.94	0.38	0.41	3.19	1.84	0.37	1.03	0.10
	1-3/8	1.86										
	1-7/16	1.73										
	35mm	*0.83*	*35.6*	*122.2*	*100.1*	*9.7*	*10.4*	*81.0*	*46.7*	*9.4*	*26.2*	*2.5*

SELECTION/DIMENSIONS

Setscrew Ball Bearings
SC NORMAL DUTY 4-BOLT FLANGE BEARINGS

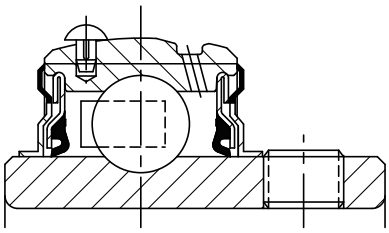

Lube Fitting Thread Size:
203 - 204 series - 1/4-28 tapered thread
207 - 207 series - 1/8-27 NPT

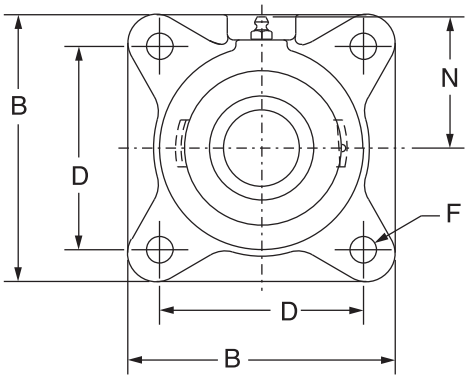

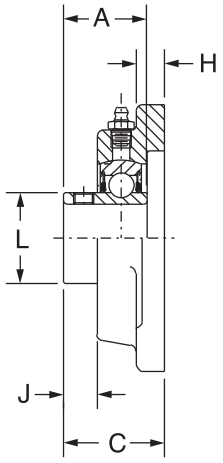

Series	Shaft Size	Standard		No-Lube/Sealed for Life (-NL)	
		Part No.	Description	Part No.	Description
203	1/2	**124048**	F4B-SC-008	**@**	F4B-SC-008-NL
	5/8	**124049**	F4B-SC-010	**067642**	F4B-SC-010-NL
	17mm	***125885***	*F4B-SC-17M*	**@**	*F4B-SC-17M-NL*
204	1/2	**124098**	F4B-SC-008L	**@**	F4B-SC-008L-NL
	5/8	**124099**	F4B-SC-010L	**@**	F4B-SC-010L-NL
	3/4	**124100**	F4B-SC-012	**052010**	F4B-SC-012-NL
	13/16	**124567**	F4B-SC-013	**@**	F4B-SC-013-NL
	20mm	***125886***	*F4B-SC-20M*	***074714***	*F4B-SC-20M-NL*
205	7/8	**124101**	F4B-SC-014	**075765**	F4B-SC-014-NL
	15/16	**124102**	F4B-SC-015	**126524**	F4B-SC-015-NL
	1	**124103**	F4B-SC-100	**126525**	F4B-SC-100-NL
	25mm	***125887***	*F4B-SC-25M*	***064943***	*F4B-SC-25M-NL*
206	1-1/16	**124218**	F4B-SC-101	**@**	F4B-SC-101-NL
	1-1/8	**124204**	F4B-SC-102	**126526**	F4B-SC-102-NL
	1-3/16	**124205**	F4B-SC-103	**050834**	F4B-SC-103-NL
	1-1/4	**123173**	F4B-SC-104S	**051987**	F4B-SC-104S-NL
	30mm	***125888***	*F4B-SC-30M*	***067874***	*F4B-SC-30M-NL*
207	1-1/4	**124206**	F4B-SC-104	**126528**	F4B-SC-104-NL
	1-5/16	**124219**	F4B-SC-105	**@**	F4B-SC-105-NL
	1-3/8	**124207**	F4B-SC-106	**052009**	F4B-SC-106-NL
	1-7/16	**124208**	F4B-SC-107	**050835**	F4B-SC-107-NL
	35mm	***125889***	*F4B-SC-35M*	**@**	*F4B-SC-35M-NL*

@ Assembled to order



Setscrew Ball Bearings
SC NORMAL DUTY 4-BOLT FLANGE BEARINGS

Series	Shaft Size	Weight lbs. kgs.	A	B	C	D	F	H	J	L	N
203	1/2	1.1	1.00	3.00	1.17	2.13	3/8	0.44	0.32	0.96	1.69
	5/8	1.0									
	17mm	*0.5*	*25.4*	*76.2*	*29.7*	*54.0*	*M10*	*11.2*	*8.1*	*24.4*	*42.9*
204	1/2	1.8	1.23	3.38	1.34	2.5	3/8	0.44	0.36	1.12	1.94
	5/8	1.7									
	3/4	1.6									
	13/16	1.5									
	20mm	*0.8*	*31.2*	*85.9*	*34.0*	*63.5*	*M10*	*11.2*	*9.1*	*28.4*	*49.3*
205	7/8	2.0	1.34	3.75	1.37	2.75	7/16	0.50	0.42	1.32	2.06
	15/16	1.9									
	1	1.8									
	25mm	*0.9*	*34.0*	*95.3*	*34.8*	*69.9*	*M10*	*12.7*	*10.7*	*33.5*	*52.3*
206	1-1/16	2.9	1.52	4.25	1.56	3.25	7/16	0.50	0.49	1.57	2.19
	1-1/8	2.8									
	1-3/16	2.7									
	1-1/4	2.6									
	30mm	*1.3*	*38.6*	*108.0*	*39.6*	*82.6*	*M10*	*12.7*	*12.4*	*39.9*	*55.6*
207	1-1/4	4.0	1.71	4.75	1.75	3.63	1/2	0.56	0.53	1.84	2.44
	1-5/16	3.9									
	1-3/8	3.8									
	1-7/16	3.7									
	35mm	*1.7*	*43.4*	*120.7*	*44.5*	*92.1*	*M12*	*14.2*	*13.5*	*46.7*	*62.0*

SELECTION/DIMENSIONS

Setscrew Ball Bearings
SC NORMAL DUTY 4-BOLT FLANGE BEARINGS

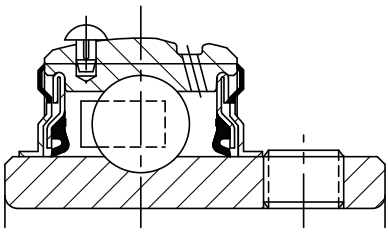

Lube Fitting Thread Size:
203 - 204 series - 1/4-28 tapered thread
207 - 207 series - 1/8-27 NPT

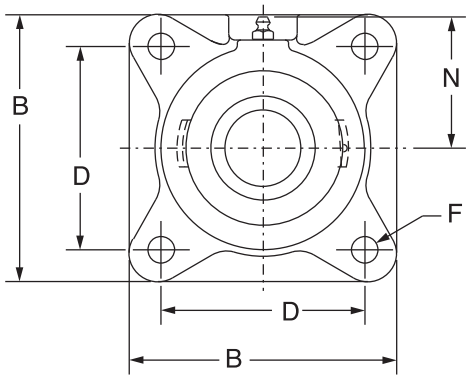

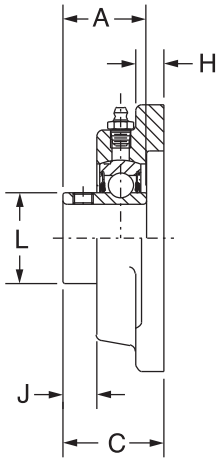

Series	Shaft Size	Standard		No-Lube/Sealed for Life (-NL)	
		Part No.	Description	Part No.	Description
208	1-1/2	**124209**	F4B-SC-108	**051991**	F4B-SC-108-NL
	1-5/8	**124210**	F4B-SC-110	**052008**	F4B-SC-110-NL
	40mm	***125890***	*F4B-SC-40M*	***073769***	*F4B-SC-40M-NL*
209	1-5/8	**125170**	F4B-SC-110L	**@**	F4B-SC-110L-NL
	1-11/16	**124211**	F4B-SC-111	**064214**	F4B-SC-111-NL
	1-3/4	**124212**	F4B-SC-112	**126531**	F4B-SC-112-NL
	45mm	***125891***	*F4B-SC-45M*	***@***	*F4B-SC-45M-NL*
210	1-15/16	**124213**	F4B-SC-115	**051992**	F4B-SC-115-NL
	2	**124214**	F4B-SC-200	**050867**	F4B-SC-200-NL
	50mm	***125892***	*F4B-SC-50M*	***068571***	*F4B-SC-50M-NL*
211	2	**126192**	F4B-SCM-200	**052004**	F4B-SCM-200-NL
	2-3/16	**124215**	F4B-SC-203	**052007**	F4B-SC-203-NL
	2-1/4	**124216**	F4B-SC-204	**052006**	F4B-SC-204-NL
	55mm	***125893***	*F4B-SC-55M*	***068572***	*F4B-SC-55M-NL*
212	2-1/4	**126283**	F4B-SCM-204	**126537**	F4B-SCM-204-NL
	2-7/16	**124217**	F4B-SC-207	**050843**	F4B-SC-207-NL
	60mm	***125894***	*F4B-SC-60M*	***064203***	*F4B-SC-60M-NL*
214	2-1/2	**126195**	F4B-SCM-208	**@**	F4B-SCM-208-NL
	2-11/16	**124261**	F4B-SC-211	**@**	F4B-SC-211-NL
	70mm	***125895***	*F4B-SC-70M*	***@***	*F4B-SC-70M-NL*
215	2-15/16	**124220**	F4B-SC-215	**052291**	F4B-SC-215-NL
	75mm	***125896***	*F4B-SC-75M*	***068573***	*F4B-SC-75M-NL*

@ Assembled to order



Setscrew Ball Bearings
SC NORMAL DUTY 4-BOLT FLANGE BEARINGS

Series	Shaft Size	Weight lbs. kgs.	A	B	C	D	F Bolt Dia	H	J	L	N
208	1-1/2	4.8	1.94	5.13	1.98	4.00	1/2	0.56	0.63	2.05	2.38
	1-5/8	4.7									
	40mm	*2.1*	*49.3*	*130.3*	*50.3*	*101.6*	*M12*	*14.2*	*16.0*	*52.1*	*60.5*
209	1-5/8	6.1	1.94	5.38	1.99	4.13	1/2	0.63	0.59	2.22	2.75
	1-11/16	6.0									
	1-3/4	5.9									
	45mm	*2.7*	*49.3*	*136.7*	*50.5*	*104.8*	*M12*	*16.0*	*15.0*	*56.4*	*69.9*
210	1-15/16	6.7	1.94	5.63	2.02	4.38	1/2	0.63	0.55	2.43	2.88
	2	6.6									
	50mm	*3.0*	*49.3*	*143.0*	*51.3*	*111.1*	*M12*	*16.0*	*14.0*	*61.7*	*73.2*
211	2	9.3	2.22	6.50	2.28	5.13	5/8	0.69	0.68	2.71	3.25
	2-3/16	9.0									
	2-1/4	8.9									
	55mm	*4.1*	*56.4*	*165.1*	*57.9*	*130.2*	*M16*	*17.5*	*17.3*	*68.8*	*82.6*
212	2-1/4	11.1	2.31	6.88	2.38	5.63	5/8	0.69	0.66	2.97	3.50
	2-7/16	10.6									
	60mm	*6.0*	*58.7*	*174.8*	*60.5*	*142.9*	*M16*	*17.5*	*16.8*	*75.4*	*88.9*
214	2-1/2	16.0	2.54	7.38	2.78	5.88	5/8	0.69	0.60	3.31	3.69
	2-11/16	15.4									
	70mm	*6.9*	*64.5*	*187.5*	*70.6*	*149.2*	*M16*	*17.5*	*15.2*	*84.1*	*93.7*
215	2-15/16	17.6	2.33	7.75	2.88	6.00	3/4	1.00	0.63	3.62	3.88
	75mm	*8.0*	*59.2*	*196.9*	*73.2*	*152.4*	*M18*	*25.4*	*16.0*	*91.9*	*98.6*

SELECTION/DIMENSIONS

Setscrew Ball Bearings

SCAH NORMAL DUTY AIR HANDLING 4-BOLT FLANGE BEARINGS

Lube Fitting Thread Size:
203 - 204 series - 1/4-28 tapered thread
207 - 207 series - 1/8-27 NPT

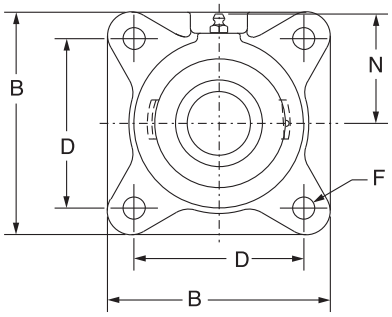

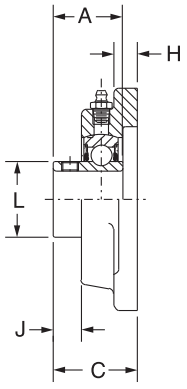

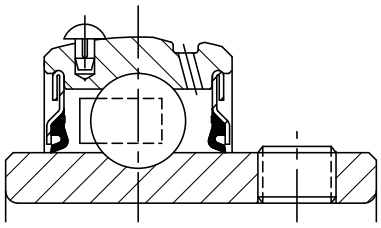

Series	Shaft Size	Part No.	Description
204	1/2	**051931**	F4B-SCAH-008L
	5/8	**050130**	F4B-SCAH-010L
	3/4	**123740**	F4B-SCAH-012
	20mm	***@***	*F4B-SCAH-20M*
205	7/8	**068301**	F4B-SCAH-014
	15/16	**124246**	F4B-SCAH-015
	1	**123741**	F4B-SCAH-100
	25mm	***058736***	*F4B-SCAH-25M*
206	1-1/16	***@***	F4B-SCAH-101
	1-1/8	**064335**	F4B-SCAH-102
	1-3/16	**123742**	F4B-SCAH-103
	1-1/4	**076609**	F4B-SCAH-104S
	30mm	***054726***	*F4B-SCAH-30M*
207	1-1/4	**123743**	F4B-SCAH-104
	1-5/16	***@***	F4B-SCAH-105
	1-3/8	**068785**	F4B-SCAH-106
	1-7/16	**123744**	F4B-SCAH-107
	35mm	***064911***	*F4B-SCAH-35M*
208	1-1/2	**123745**	F4B-SCAH-108
	1-5/8	***@***	F4B-SCAH-110
	40mm	***064912***	*F4B-SCAH-40M*

@ Assembled to order

Series	Shaft Size	Weight lbs. kgs.	A	B	C	D	F Bolt Dia.	H	J	L	N
204	1/2	1.8	1.23	3.38	1.34	2.50	3/8	0.44	0.36	1.12	1.94
	5/8	1.7									
	3/4	1.6									
	20mm	*0.8*	*31.2*	*85.9*	*34.0*	*63.5*	*M10*	*11.2*	*9.1*	*28.4*	*49.3*
205	7/8	2.0	1.34	3.75	1.37	2.75	7/16	0.50	0.42	1.32	2.06
	15/16	1.9									
	1	1.8									
	25mm	*0.9*	*34.0*	*95.3*	*34.8*	*69.9*	*M10*	*12.7*	*10.7*	*33.5*	*52.3*
206	1-1/16	2.9	1.52	4.25	1.56	3.25	7/16	0.50	0.49	1.57	2.19
	1-1/8	2.8									
	1-3/16	2.7									
	1-1/4	2.6									
	30mm	*1.3*	*38.6*	*108.0*	*39.6*	*82.6*	*M10*	*12.7*	*12.4*	*39.9*	*55.6*
207	1-1/4	4.0	1.71	4.75	1.75	3.63	1/2	0.56	0.53	1.84	2.44
	1-5/16	3.9									
	1-3/8	3.8									
	1-7/16	3.7									
	35mm	*1.7*	*43.4*	*120.7*	*44.5*	*92.1*	*M12*	*14.2*	*13.5*	*46.7*	*62.0*
208	1-1/2	4.8	1.94	5.13	1.98	4.00	1/2	0.56	0.63	2.05	2.38
	1-5/8	4.7									
	40mm	*2.1*	*49.3*	*130.3*	*50.3*	*101.6*	*M12*	*14.2*	*16.0*	*52.1*	*60.5*

DODGE®



Setscrew Ball Bearings

SCAH NORMAL DUTY AIR HANDLING 4-BOLT FLANGE BEARINGS

Lube Fitting Thread Size:
203 - 204 series - 1/4-28 tapered thread
207 - 207 series - 1/8-27 NPT

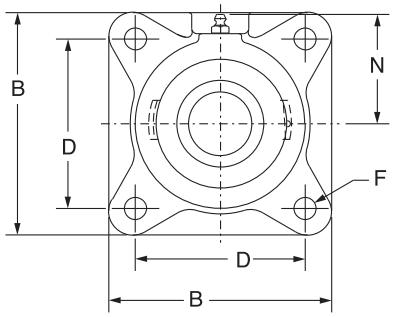

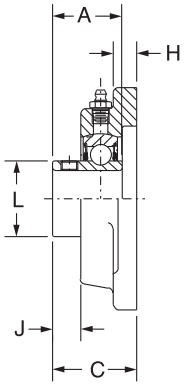

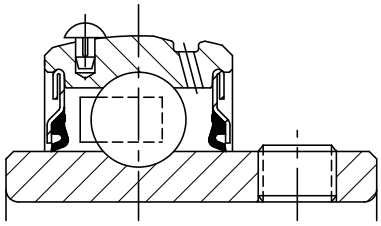

Series	Shaft Size	Part No.	Description
209	1-5/8	@	F4B-SCAH-110L
	1-11/16	**123746**	F4B-SCAH-111
	1-3/4	**123747**	F4B-SCAH-112
	45mm	**@**	*F4B-SCAH-45M*
210	1-15/16	**123748**	F4B-SCAH-115
	2	**064853**	F4B-SCAH-200
	50mm	***064913***	*F4B-SCAH-50M*
211	2	**068973**	F4B-SCMAH-200
	2-3/16	**123749**	F4B-SCAH-203
	2-1/4	**@**	F4B-SCAH-204
	55mm	**@**	*F4B-SCAH-55M*
212	2-1/4	**064586**	F4B-SCMAH-204
	2-7/16	**123750**	F4B-SCAH-207
	60mm	***074008***	*F4B-SCAH-60M*
214	2-1/2	**050662**	F4B-SCMAH-208
	2-11/16	**124395**	F4B-SCAH-211
	70mm	**@**	*F4B-SCAH-70M*
215	2-15/16	**123751**	F4B-SCAH-215
	75mm	**@**	*F4B-SCAH-75M*

@ Assembled to order

Series	Shaft Size	Weight lbs. kgs.	A	B	C	D	F Bolt Dia.	H	J	L	N
209	1-5/8	6.1	1.94	5.38	1.99	4.13	1/2	0.63	0.59	2.22	2.75
	1-11/16	6.0									
	1-3/4	5.9									
	45mm	*2.7*	*49.3*	*136.7*	*50.5*	*104.8*	*M14*	*16.0*	*15.0*	*56.4*	*69.9*
210	1-15/16	6.7	1.94	5.63	2.02	4.38	1/2	0.63	0.55	2.43	2.88
	2	6.6									
	50mm	*3.0*	*49.3*	*143.0*	*51.3*	*111.1*	*M16*	*16.0*	*14.0*	*61.7*	*73.2*
211	2	9.3	2.22	6.50	2.28	5.13	5/8	0.69	0.68	2.71	3.25
	2-3/16	9.0									
	2-1/4	8.9									
	55mm	*4.1*	*56.4*	*165.1*	*57.9*	*130.2*	*M16*	*17.5*	*17.3*	*68.8*	*82.6*
212	2-1/4	11.1	2.31	6.88	2.38	5.63	5/8	0.69	0.66	2.97	3.50
	2-7/16	10.6									
	60mm	*6.0*	*58.7*	*174.8*	*60.5*	*142.9*	*M16*	*17.5*	*16.8*	*75.4*	*88.9*
214	2-1/2	16.0	2.54	7.38	2.78	5.88	5/8	0.69	0.60	3.31	3.69
	2-11/16	15.4									
	70mm	6.9	64.5	187.5	70.6	149.2	M16	17.5	15.2	84.1	93.7
215	2-15/16	17.6	2.33	7.75	2.88	6.00	3/4	1.00	0.63	3.62	3.88
	75mm	*8.0*	*59.2*	*196.9*	*73.2*	*152.4*	*M18*	*25.4*	*16.0*	*91.9*	*98.6*

FEATURES/BENEFITS PAGE B4-3	HOW TO ORDER/NOMENCLATURE PAGE B4-5	SELECTION PAGE B4-6	ACCESSORIES PAGE B4-98

SELECTION/DIMENSIONS

DODGE®



Setscrew Ball Bearings
SCM MEDIUM DUTY 4-BOLT FLANGE BEARINGS

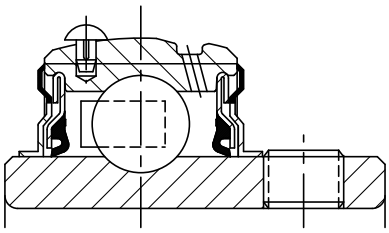

Lube Fitting Thread Size:
203 - 204 series - 1/4-28 tapered thread
207 - 207 series - 1/8-27 NPT

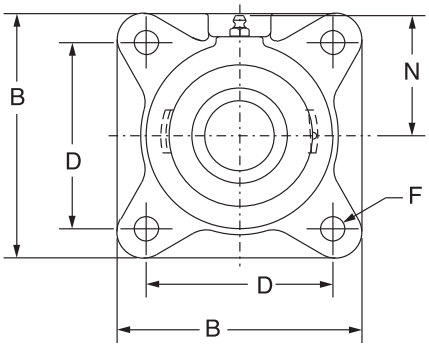

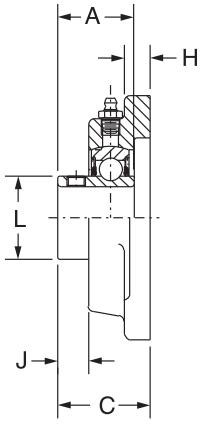

Series	Shaft Size	Standard		No-Lube/Sealed for Life (-NL)	
		Part No.	Description	Part No.	Description
206	1	**126226**	F4B-SCM-100	**052017**	F4B-SCM-100-NL
	25mm	***125965***	*F4B-SCM-25M*	**@**	*F4B-SCM-25M-NL*
207	1-3/16	**126227**	F4B-SCM-103	**056907**	F4B-SCM-103-NL
	1-1/4	**124206**	F4B-SC-104	**126528**	F4B-SC-104-NL
	30mm	***125966***	*F4B-SCM-30M*	**@**	*F4B-SCM-30M-NL*
208	1-7/16	**126187**	F4B-SCM-107	**062842**	F4B-SCM-107-NL
	35mm	***125967***	*F4B-SCM-35M*	**@**	*F4B-SCM-35M-NL*
209	1-1/2	**126188**	F4B-SCM-108	**062897**	F4B-SCM-108-NL
	1-5/8	**125170**	F4B-SC-110L	**@**	F4B-SC-110L-NL
	40mm	***125968***	*F4B-SCM-40M*	**@**	*F4B-SCM-40M-NL*
210	1-11/16	**126189**	F4B-SCM-111	**065576**	F4B-SCM-111-NL
	1-3/4	**126190**	F4B-SCM-112	**@**	F4B-SCM-112-NL
	45mm	***125969***	*F4B-SCM-45M*	**@**	*F4B-SCM-45M-NL*
211	1-15/16	**126191**	F4B-SCM-115	**052302**	F4B-SCM-115-NL
	2	**126192**	F4B-SCM-200	**052004**	F4B-SCM-200-NL
	50mm	***125970***	*F4B-SCM-50M*	***073950***	*F4B-SCM-50M-NL*
212	2-3/16	**126193**	F4B-SCM-203	**052003**	F4B-SCM-203-NL
	2-1/4	**126283**	F4B-SCM-204	**126537**	F4B-SCM-204-NL
	55mm	***125971***	*F4B-SCM-55M*	**@**	*F4B-SCM-55M-NL*
214	2-7/16	**126194**	F4B-SCM-207	**052002**	F4B-SCM-207-NL
	2-1/2	**126195**	F4B-SCM-208	**065653**	F4B-SCM-208-NL
	65mm	***125972***	*F4B-SCM-65M*	**@**	*F4B-SCM-65M-NL*
215	2-11/16	**126186**	F4B-SCM-211	**052205**	F4B-SCM-211-NL
	70mm	***125973***	*F4B-SCM-70M*	**@**	*F4B-SCM-70M-NL*
216	2-15/16	**126196**	F4B-SCM-215	**126538**	F4B-SCM-215-NL
	3	**126197**	F4B-SCM-300	**126539**	F4B-SCM-300-NL
	75mm	***125974***	*F4B-SCM-75M*	**@**	*F4B-SCM-75M-NL*
218	3-7/16	**126198**	F4B-SCM-307	**126540**	F4B-SCM-307-NL
	3-1/2	**126199**	F4B-SCM-308	**126541**	F4B-SCM-308-NL
	85mm	***125975***	*F4B-SCM-85M*	**@**	*F4B-SCM-85M-NL*

@ Assembled to order



Setscrew Ball Bearings
SCM MEDIUM DUTY 4-BOLT FLANGE BEARINGS

Series	Shaft Size	Weight lbs. kgs.	A	B	C	D	F	H	J	L	N
206	1	3.0	1.52	4.25	1.56	3.25	7/16	0.50	0.49	1.57	2.19
	25mm	*1.3*	*38.6*	*108.0*	*39.6*	*82.6*	*M10*	*12.7*	*12.4*	*39.9*	*55.6*
207	1-3/16	4.1	1.71	4.75	1.75	3.63	1/2	0.56	0.53	1.84	2.44
	1-1/4	4.0									
	30mm	*1.4*	*43.4*	*120.7*	*44.5*	*92.1*	*M12*	*14.2*	*13.5*	*46.7*	*62.0*
208	1-7/16	5.0	1.94	5.13	1.98	4.00	1/2	0.56	0.63	2.05	2.38
	35mm	*2.1*	*49.3*	*130.3*	*50.3*	*101.6*	*M12*	*14.2*	*16.0*	*52.1*	*60.5*
209	1-1/2	6.1	1.94	5.38	1.99	4.13	1/2	0.63	0.59	2.22	2.75
	1-5/8	6.1									
	40mm	*2.7*	*49.3*	*136.7*	*50.5*	*104.8*	*M12*	*16.0*	*15.0*	*56.4*	*69.9*
210	1-11/16	7.1	1.94	5.63	2.02	4.38	1/2	0.63	0.55	2.43	2.88
	1-3/4	6.9									
	45mm	*3.0*	*49.3*	*143.0*	*51.3*	*111.1*	*M12*	*16.0*	*14.0*	*61.7*	*73.2*
211	1-15/16	9.5	2.22	6.50	2.28	5.13	5/8	0.69	0.68	2.71	3.25
	2	9.3									
	50mm	*4.1*	*56.4*	*165.1*	*57.9*	*130.2*	*M16*	*17.5*	*17.3*	*68.8*	*82.6*
212	2-3/16	11.3	2.31	6.88	2.38	5.63	5/8	0.69	0.66	2.97	3.50
	2-1/4	11.1									
	55mm	*6.0*	*58.7*	*174.8*	*60.5*	*142.9*	*M16*	*17.5*	*16.8*	*75.4*	*88.9*
214	2-7/16	16.2	2.54	7.38	2.78	5.88	5/8	0.69	0.60	3.31	3.69
	2-1/2	16.0									
	65mm	*7.3*	*64.5*	*187.5*	*70.6*	*149.2*	*M16*	*17.5*	*15.2*	*84.1*	*93.7*
215	2-11/16	18.3	2.33	7.75	2.88	6.00	3/4	1.00	0.63	3.62	3.88
	70mm	*8.0*	*59.2*	*196.9*	*73.2*	*152.4*	*M18*	*25.4*	*16.0*	*91.9*	*98.6*
216	2-15/16	21.5	2.38	7.75	3.09	6.00	3/4	0.88	0.59	3.83	4.09
	3	21.2									
	75mm	*9.4*	*60.5*	*196.9*	*78.5*	*152.4*	*M18*	*22.4*	*15.0*	*97.3*	*103.9*
218	3-7/16	28.0	2.56	8.44	3.38	6.75	3/4	1.00	0.60	4.35	4.63
	3-1/2	27.4									
	85mm	*12.2*	*65.0*	*214.4*	*85.9*	*171.5*	*M18*	*25.4*	*15.2*	*110.5*	*117.6*

FEATURES/BENEFITS PAGE B4-3	HOW TO ORDER/NOMENCLATURE PAGE B4-5	SELECTION PAGE B4-6	ACCESSORIES PAGE B4-98

SELECTION/DIMENSIONS

Setscrew Ball Bearings
SCMAH AIR HANDLING MEDIUM DUTY 4-BOLT FLANGE BEARINGS

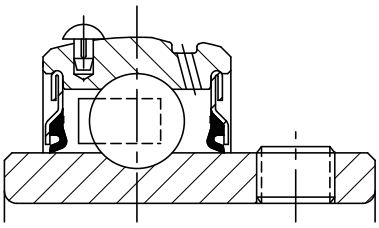

Lube Fitting Thread Size:
203 - 204 series - 1/4-28 tapered thread
207 - 207 series - 1/8-27 NPT

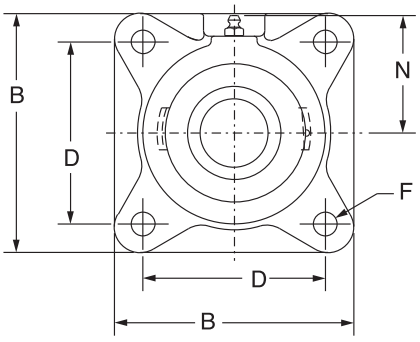

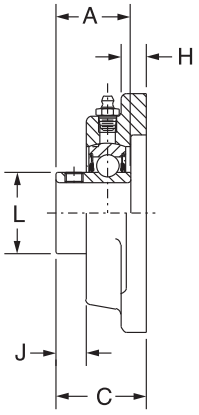

Series	Shaft Size	Part No.	Description
206	1	**053901**	F4B-SCMAH-100
	25mm	***@***	*F4B-SCMAH-25M*
207	1-3/16	**050132**	F4B-SCMAH-103
	1-1/4	**123743**	F4B-SCAH-104
	30mm	***@***	*F4B-SCMAH-30M*
208	1-7/16	**123760**	F4B-SCMAH-107
	35mm	***@***	*F4B-SCMAH-35M*
209	1-1/2	**123761**	F4B-SCMAH-108
	1-5/8	**@**	F4B-SCAH-110L
	40mm	***@***	*F4B-SCMAH-40M*
210	1-11/16	**123762**	F4B-SCMAH-111
	1-3/4	**123763**	F4B-SCMAH-112
	45mm	***067829***	*F4B-SCMAH-45M*
211	1-15/16	**123764**	F4B-SCMAH-115
	2	**068973**	F4B-SCMAH-200
	50mm	***075020***	*F4B-SCMAH-50M*
212	2-3/16	**123765**	F4B-SCMAH-203
	2-1/4	**064586**	F4B-SCMAH-204
	55mm	***@***	*F4B-SCMAH-55M*
214	2-7/16	**123766**	F4B-SCMAH-207
	2-1/2	**050662**	F4B-SCMAH-208
	65mm	***@***	*F4B-SCMAH-65M*
215	2-11/16	**123767**	F4B-SCMAH-211
	70mm	***@***	*F4B-SCMAH-70M*
216	2-15/16	**123768**	F4B-SCMAH-215
	3	**073911**	F4B-SCMAH-300
	75mm	***@***	*F4B-SCM-75M*
218	3-7/16	**123769**	F4B-SCMAH-307
	3-1/2	**057709**	F4B-SCMAH-308
	85mm	***@***	*F4B-SCMAH-85M*

@ Assembled to order



Setscrew Ball Bearings
SCMAH AIR HANDLING MEDIUM DUTY 4-BOLT FLANGE BEARINGS

Series	Shaft Size	Weight lbs. kgs.	A	B	C	D	F Bolt Dia.	H	J	L	N
206	1	3.0	1.52	4.25	1.56	3.25	7/16	0.50	0.49	1.57	2.19
	25mm	*1.3*	*38.6*	*108.0*	*39.6*	*82.6*	*M10*	*12.7*	*12.4*	*39.9*	*55.6*
207	1-3/16 1-1/4	4.1	1.71	4.75	1.75	3.63	1/2	0.56	0.53	1.84	2.44
	30mm	*1.7*	*43.4*	*120.7*	*44.5*	*92.1*	*M12*	*14.2*	*13.5*	*46.7*	*62.0*
208	1-7/16	5.0	1.94	5.13	1.98	4.00	1/2	0.56	0.63	2.05	2.38
	35mm	*2.1*	*49.3*	*130.3*	*50.3*	*101.6*	*M12*	*14.2*	*16.0*	*52.1*	*60.5*
209	1-1/2 1-5/8	6.1	1.94	5.38	1.99	4.13	1/2	0.63	0.59	2.22	2.75
	40mm	*2.7*	*49.3*	*136.7*	*50.5*	*104.8*	*M14*	*16.0*	*15.0*	*56.4*	*69.9*
210	1-11/16 1-3/4	7.1	1.94	5.63	2.02	4.38	1/2	0.63	0.55	2.43	2.88
	45mm	*3.0*	*49.3*	*143.0*	*51.3*	*111.1*	*M16*	*16.0*	*14.0*	*61.7*	*73.2*
211	1-15/16 2	9.5	2.22	6.50	2.28	5.13	5/8	0.69	0.68	2.71	3.25
	50mm	*4.1*	*56.4*	*165.1*	*57.9*	*130.2*	*M16*	*17.5*	*17.3*	*68.8*	*82.6*
212	2-3/16 2-1/4	11.3	2.31	6.88	2.38	5.63	5/8	0.69	0.66	2.97	3.50
	55mm	*6.0*	*58.7*	*174.8*	*60.5*	*142.9*	*M16*	*17.5*	*16.8*	*75.4*	*88.9*
214	2-7/16 2-1/2	16.2	2.54	7.38	2.78	5.88	5/8	0.69	0.60	3.31	3.69
	65mm	*7.3*	*64.5*	*187.5*	*70.6*	*149.2*	*M16*	*17.5*	*15.2*	*84.1*	*93.7*
215	2-11/16	18.3	2.33	7.75	2.88	6.00	3/4	1.00	0.63	3.62	3.88
	70mm	*8.0*	*59.2*	*196.9*	*73.2*	*152.4*	*M18*	*25.4*	*16.0*	*91.9*	*98.6*
216	2-15/16 3	21.5	2.38	7.75	3.09	6.00	3/4	0.88	0.59	3.83	4.09
	75mm	*9.4*	*60.5*	*196.9*	*78.5*	*152.4*	*M18*	*22.4*	*15.0*	*97.3*	*103.9*
218	3-7/16 3-1/2	28.0	2.56	8.44	3.38	6.75	3/4	1.00	0.60	4.35	4.63
	85mm	*12.2*	*65.0*	*214.4*	*85.9*	*171.5*	*M18*	*25.4*	*15.2*	*110.5*	*117.6*

FEATURES/BENEFITS PAGE B4-3	HOW TO ORDER/NOMENCLATURE PAGE B4-5	SELECTION PAGE B4-6	ACCESSORIES PAGE B4-98

SELECTION/DIMENSIONS

Setscrew Ball Bearings
SL LIGHT DUTY 4-BOLT FLANGE BEARINGS

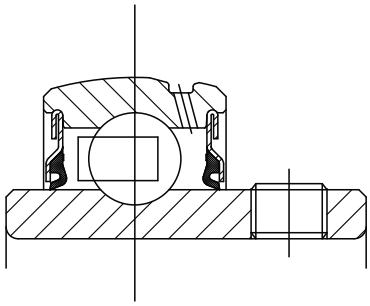

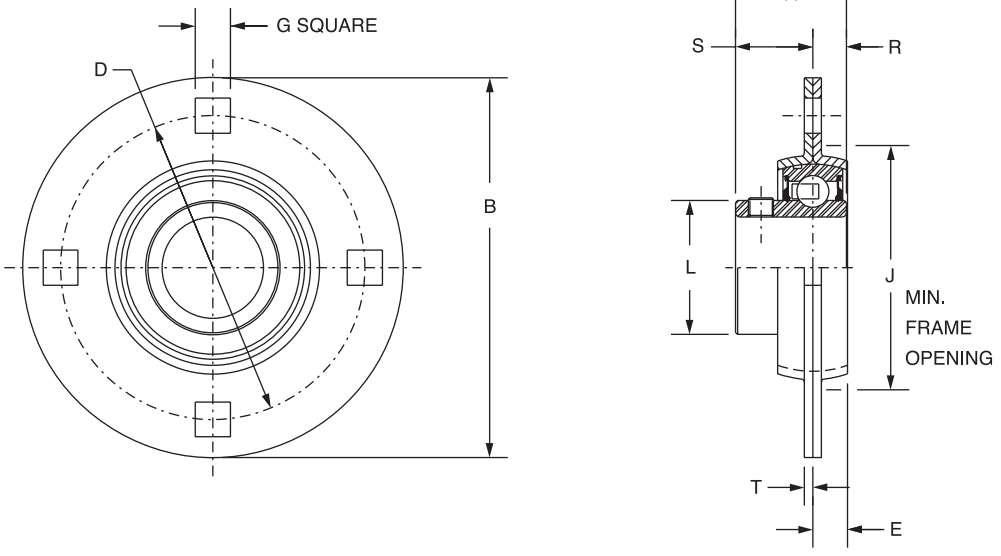

Series	Shaft Size	Part No.	Description
208	1-1/2	**128088**	F4B-SL-108
	40mm	***067868***	*F4B-SL-40M*
210	1-15/16	**128089**	F4B-SL-115
	2	**128090**	F4B-SL-200
	50mm	*@*	*F4B-SL-50M*
211	2	**128182**	F4B-SL-200L
	2-3/16	**128091**	F4B-SL-203
	55mm	*@*	*F4B-SL-55M*

@ Assembled to order



Setscrew Ball Bearings
SL LIGHT DUTY 4-BOLT FLANGE BEARINGS

Series	Shaft Size	Weight lbs. kgs.	A	B	D	E	G	J	L	R	S	T
208	1-1/2	2.64	1.94	5.81	4.69	0.41	0.53	3.56	2.05	0.75	1.19	0.13
	40mm	*1.15*	*49.3*	*147.6*	*119.1*	*10.4*	*13.5*	*90.4*	*52.1*	*19.1*	*30.2*	*3.3*
210	1-15/16	2.95	1.94	6.13	5.00	0.44	0.53	4.00	2.43	0.75	1.19	0.15
	2	2.86										
	50mm	*1.28*	*49.3*	*155.7*	*127.0*	*11.2*	*13.5*	*101.6*	*61.7*	*19.1*	*30.2*	*3.8*
211	2	3.73	2.22	6.56	5.44	0.47	0.53	4.44	2.71	0.87	1.35	0.15
	2-3/16	3.63										
	55mm	*1.62*	*56.4*	*166.6*	*138.2*	*11.9*	*13.5*	*112.8*	*68.8*	*22.1*	*34.3*	*3.8*

FEATURES/BENEFITS PAGE B4-3	HOW TO ORDER/NOMENCLATURE PAGE B4-5	SELECTION PAGE B4-6	ACCESSORIES PAGE B4-98

SELECTION/DIMENSIONS

Setscrew Ball Bearings
SC NORMAL DUTY PILOTED FLANGE BEARINGS

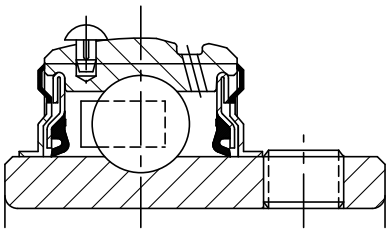

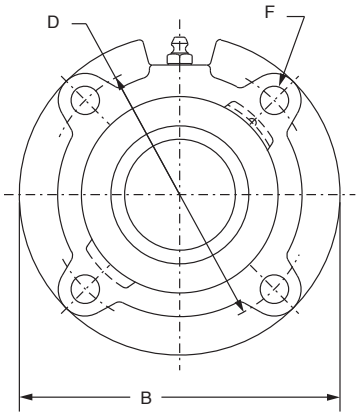

Lube Fitting Thread Size:
1/8-27 NPT

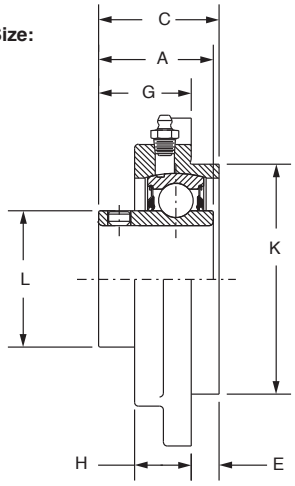

Series	Shaft Size	Part No.	Description
206	1-1/16	**124578**	FC-SC-101
	1-1/8	**124582**	FC-SC-102
	1-3/16	**124579**	FC-SC-103
	1-1/4	**124587**	FC-SC-104S
	30mm	***125865***	*FC-SC-30M*
207	1-1/4	**124224**	FC-SC-104
	1-5/16	**124237**	FC-SC-105
	1-3/8	**124235**	FC-SC-106
	1-7/16	**124236**	FC-SC-107
	35mm	***125866***	*FC-SC-35M*
208	1-1/2	**124225**	FC-SC-108
	1-5/8	**124226**	FC-SC-110
	40mm	***125867***	*FC-SC-40M*
209	1-5/8	**065644**	FC-SC-110L
	1-11/16	**124227**	FC-SC-111
	1-3/4	**124228**	FC-SC-112
	45mm	***125868***	*FC-SC-45M*
210	1-15/16	**124229**	FC-SC-115
	2	**124230**	FC-SC-200
	50mm	***125869***	*FC-SC-50M*
211	2	**126175**	FC-SCM-200
	2-3/16	**124231**	FC-SC-203
	2-1/4	**124232**	FC-SC-204
	55mm	***125870***	*FC-SC-55M*
212	2-1/4	**126177**	FC-SCM-204
	2-7/16	**124233**	FC-SC-207
	60mm	***125871***	*FC-SC-60M*
214	2-1/2	**126179**	FC-SCM-208
	2-11/16	**124729**	FC-SC-211
	70mm	***125872***	*FC-SC-70M*

@ Assembled to order



Setscrew Ball Bearings
SC NORMAL DUTY PILOTED FLANGE BEARINGS

Series	Shaft Size	Weight lbs. kgs.	A	B	C	D	E	F Bolt Dia.	G	H	K	L
	1-1/16	3.2	1.52	4.38	1.53	3.63	0.25	3/8	1.28	0.81	3.000/2.998	1.57
	1-1/8	3.1										
206	1-3/16	3.0										
	1-1/4	2.9										
	30mm	*1.3*	*38.6*	*111.3*	*38.9*	*92.2*	*6.4*	*M10*	*32.5*	*20.6*	*76.20/76.15*	*39.9*
	1-1/4	4.2	1.71	5.00	1.78	4.13	0.38	3/8	1.40	0.84	3.375/3.373	1.84
	1-5/16	4.1										
207	1-3/8	4.0										
	1-7/16	3.9										
	35mm	*1.8*	*43.4*	*127.0*	*45.2*	*104.9*	*9.7*	*M10*	*35.6*	*21.3*	*85.73/85.67*	*46.7*
	1-1/2	4.6	1.94	5.25	1.98	4.38	0.44	7/16	1.54	0.89	3.625/3.623	2.05
208	1-5/8	4.5										
	40mm	*2.0*	*49.3*	*133.4*	*50.3*	*111.3*	*11.2*	*M12*	*39.1*	*22.6*	*92.08/92.02*	*52.1*
	1-5/8	5.6	1.94	5.75	1.95	4.75	0.44	1/2	1.51	0.91	4.000/3.998	2.22
209	1-11/16	5.5										
	1-3/4	5.4										
	45mm	*2.4*	*49.3*	*146.1*	*49.5*	*120.7*	*11.2*	*M12*	*38.4*	*23.1*	*101.60/101.55*	*56.4*
	1-15/16	6.4	1.94	6.13	1.98	5.13	0.47	1/2	1.51	0.92	4.250/4.248	2.43
210	2	6.3										
	50mm	*2.9*	*49.3*	*155.7*	*50.3*	*130.3*	*11.9*	*M12*	*38.4*	*23.4*	*107.95/107.90*	*61.7*
	2	7.3	2.22	6.38	2.35	5.38	0.63	1/2	1.72	1.00	4.500/4.498	2.71
211	2-3/16	7.2										
	2-1/4	7.1										
	55mm	*3.3*	*56.4*	*162.1*	*59.7*	*136.7*	*16.0*	*M12*	*43.7*	*25.4*	*114.30/114.25*	*68.8*
	2-1/4	9.6	2.31	7.13	2.54	6.00	0.88	1/2	1.67	1.00	5.000/4.998	2.97
212	2-7/16	9.5										
	60mm	*4.3*	*58.7*	*181.1*	*64.5*	*152.4*	*22.4*	*M12*	*42.4*	*25.4*	*127.00/126.95*	*75.4*
	2-1/2	13.0	2.54	7.63	2.80	6.50	1.13	1/2	1.67	1.06	5.500/5.498	3.31
214	2-11/16	12.9										
	70mm	*5.5*	*64.5*	*193.8*	*71.1*	*165.1*	*28.7*	*M12*	*42.4*	*26.9*	*139.70/139.65*	*84.1*

FEATURES/BENEFITS PAGE B4-3	HOW TO ORDER/NOMENCLATURE PAGE B4-5	SELECTION PAGE B4-6	ACCESSORIES PAGE B4-98

SELECTION/DIMENSIONS

Setscrew Ball Bearings
SCM MEDIUM DUTY PILOTED FLANGE BEARINGS

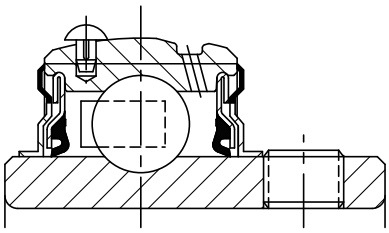

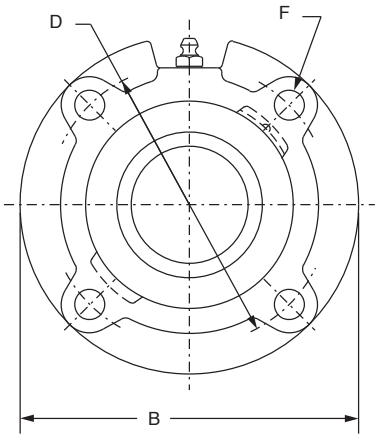

Lube Fitting Thread Size:
1/8-27 NPT

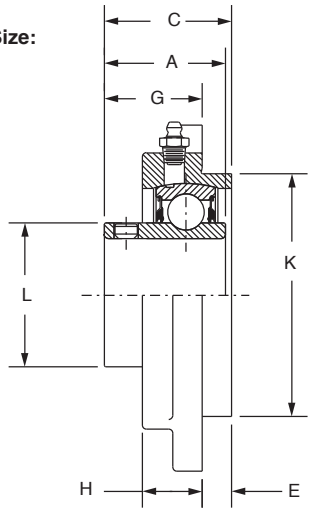

Series	Shaft Size	Part No.	Description
206	1	**126167**	FC-SCM-100
	25mm	***125940***	*FC-SCM-25M*
207	1-3/16	**126168**	FC-SCM-103
	1-1/4	**124224**	FC-SC-104
	30mm	***125941***	*FC-SCM-30M*
208	1-7/16	**126170**	FC-SCM-107
	1-1/2	**126171**	FC-SCM-108
	35mm	***125942***	*FC-SCM-35M*
209	1-1/2	**056492**	FC-SCM-108L
	1-5/8	**065644**	FC-SC-110L
	40mm	***125943***	*FC-SCM-40M*
210	1-11/16	**126172**	FC-SCM-111
	1-3/4	**126173**	FC-SCM-112
	45mm	***125944***	*FC-SCM-45M*
211	1-15/16	**126174**	FC-SCM-115
	2	**126175**	FC-SCM-200
	50mm	***125945***	*FC-SCM-50M*
212	2-3/16	**126176**	FC-SCM-203
	2-1/4	**126177**	FC-SCM-204
	55mm	***125946***	*FC-SCM-55M*
214	2-7/16	**126178**	FC-SCM-207
	2-1/2	**126179**	FC-SCM-208
	65mm	***125947***	*FC-SCM-65M*
216	2-15/16	**126180**	FC-SCM-215
	3	**126182**	FC-SCM-300
	75mm	***125948***	*FC-SCM-75M*
218	3-7/16	**126183**	FC-SCM-307
	3-1/2	**126184**	FC-SCM-308
	85mm	***125949***	*FC-SCM-85M*

@ Assembled to order



Setscrew Ball Bearings
SCM MEDIUM DUTY PILOTED FLANGE BEARINGS

Series	Shaft Size	Weight lbs. kgs.	A	B	C	D	E	F Bolt Dia.	G	H	K	L
206	1	3.3	1.52	4.38	1.53	3.63	0.25	3/8	1.28	0.81	3.000/2.998	1.57
	25mm	*1.4*	*38.6*	*111.3*	*38.9*	*92.2*	*6.4*	*M10*	*32.5*	*20.6*	*76.20/76.15*	*39.9*
207	1-3/16	4.2	1.71	5.00	1.78	4.13	0.38	3/8	1.40	0.84	3.375/3.373	1.84
	1-1/4	4.2										
	30mm	*1.9*	*43.4*	*127.0*	*45.2*	*104.9*	*9.7*	*M10*	*35.6*	*21.3*	*85.73/85.67*	*46.7*
208	1-7/16	4.8	1.94	5.25	1.98	4.38	0.44	7/16	1.54	0.89	3.625/3.623	2.05
	1-1/2	4.6										
	35mm	*2.1*	*49.3*	*133.4*	*50.3*	*111.3*	*11.2*	*M12*	*39.1*	*22.6*	*92.08/92.02*	*52.1*
209	1-1/2	5.6	1.94	5.75	1.95	4.75	0.44	1/2	1.51	0.91	4.000/3.998	2.22
	1-5/8	5.6										
	40mm	*2.5*	*49.3*	*146.1*	*49.5*	*120.7*	*11.2*	*M12*	*38.4*	*23.1*	*101.60/101.55*	*56.4*
210	1-11/16	6.4	1.94	6.13	1.98	5.13	0.47	1/2	1.51	0.92	4.250/4.248	2.43
	1-3/4	6.3										
	45mm	*2.9*	*49.3*	*155.7*	*50.3*	*130.3*	*11.9*	*M12*	*38.4*	*23.4*	*107.95/107.90*	*61.7*
211	1-15/16	7.6	2.22	6.38	2.35	5.38	0.63	1/2	1.72	1.00	4.500/4.498	2.71
	2	7.4										
	50mm	*3.4*	*56.4*	*162.1*	*59.7*	*136.7*	*16.0*	*M12*	*43.7*	*25.4*	*114.30/114.25*	*68.8*
212	2-3/16	9.5	2.31	7.13	2.54	6.00	0.88	1/2	1.67	1.00	5.000/4.998	2.97
	2-1/4	9.8										
	55mm	*4.4*	*58.7*	*181.1*	*64.5*	*152.4*	*22.4*	*M12*	*42.4*	*25.4*	*127.00/126.95*	*75.4*
214	2-7/16	13.2	2.54	7.63	2.80	6.50	1.13	1/2	1.67	1.06	5.500/5.498	3.31
	2-1/2	13.0										
	65mm	*5.9*	*64.5*	*193.8*	*71.1*	*165.1*	*28.7*	*M12*	*42.4*	*26.9*	*139.70/139.65*	*84.1*
216	2-15/16	18.8	2.38	8.75	3.02	7.50	1.25	5/8	1.77	1.19	6.375/6.373	3.83
	3	18.6										
	75mm	*8.5*	*60.5*	*222.3*	*76.7*	*190.5*	*31.8*	*M16*	*45.0*	*30.2*	*161.93/161.87*	*97.3*
218	3-7/16	28.7	2.56	10.25	3.33	8.38	1.13	3/4	2.21	1.63	7.375/7.373	4.35
	3-1/2	28.5										
	85mm	*13.5*	*65.0*	*260.4*	*84.6*	*212.9*	*28.6*	*M18*	*56.1*	*41.4*	*187.33/187.27*	*110.5*

FEATURES/BENEFITS PAGE B4-3 | HOW TO ORDER/NOMENCLATURE PAGE B4-5 | SELECTION PAGE B4-6 | ACCESSORIES PAGE B4-98

SELECTION/DIMENSIONS

Setscrew Ball Bearings
SC NORMAL DUTY NARROW SLOT TAKE-UP BEARINGS

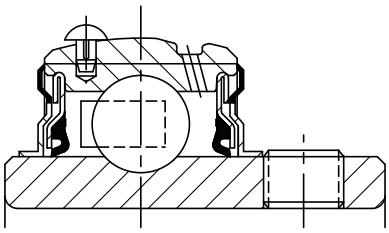

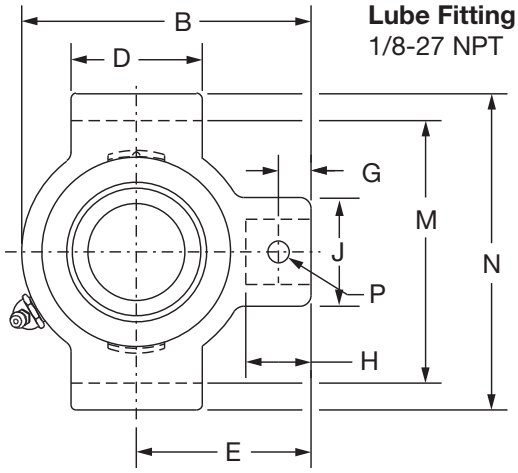

Lube Fitting Thread Size:
1/8-27 NPT

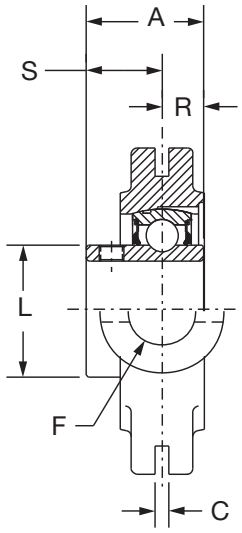

Series	Shaft Size	Standard		No Lube/Sealed for Life (-NL)	
		Part No.	Description	Part No.	Description
204	1/2	**125328**	NSTU-SC-008	**@**	NSTU-SC-008-NL
	5/8	**125329**	NSTU-SC-010	**@**	NSTU-SC-010-NL
	3/4	**125050**	NSTU-SC-012	**073970**	NSTU-SC-012-NL
	20mm	***125900***	*NSTU-SC-20M*	**@**	*NSTU-SC-20M-NL*
205	7/8	**125365**	NSTU-SC-014	**@**	NSTU-SC-014-NL
	15/16	**125051**	NSTU-SC-015	**@**	NSTU-SC-015-NL
	1	**125052**	NSTU-SC-100	**125054**	NSTU-SC-100-NL
	25mm	***125901***	*NSTU-SC-25M*	**@**	*NSTU-SC-25M-NL*
206	1-1/16	**125366**	NSTU-SC-101	**@**	NSTU-SC-101-NL
	1-1/8	**125367**	NSTU-SC-102	**065642**	NSTU-SC-102-NL
	1-3/16	**125153**	NSTU-SC-103	**052194**	NSTU-SC-103-NL
	1-1/4	**123174**	NSTU-SC-104S	**@**	NSTU-SC-104S-NL
	30mm	***125902***	*NSTU-SC-30M*	**@**	*NSTU-SC-30M-NL*
207	1-1/4	**125154**	NSTU-SC-104	**058897**	NSTU-SC-104-NL
	1-5/16	**125368**	NSTU-SC-105	**065681**	NSTU-SC-105-NL
	1-3/8	**125369**	NSTU-SC-106	**125378**	NSTU-SC-106-NL
	1-7/16	**125155**	NSTU-SC-107	**052199**	NSTU-SC-107-NL
	35mm	***125903***	*NSTU-SC-35M*	**@**	*NSTU-SC-35M-NL*

@ Assembled to order

See B15-9 for Take-Up Frames



Setscrew Ball Bearings
SC NORMAL DUTY NARROW SLOT TAKE-UP BEARINGS

Series	Shaft Size	Weight lbs. kgs.	Take-Up Frame No. Ref.	A	B	C	D	E	F Bolt Dia.	G	H	J	L	M	N	P Pin Dia.	R	S
204	1/2	1.6	NS210	1.23	3.50	0.250	1.50	2.19	3/4	0.44	0.88	1.38	1.12	2.635/2.605	3.13	0.32	0.50	0.73
	5/8	1.5																
	3/4	1.4																
	20mm	*0.8*		*31.2*	*88.9*	*6.35*	*38.1*	*55.6*	*19.1*	*11.2*	*22.4*	*35.1*	*28.4*	*66.93/66.17*	*79.5*	*8.1*	*12.7*	*18.5*
205	7/8	1.7	NS210	1.34	3.56	0.250	1.50	2.19	3/4	0.44	0.88	1.38	1.32	2.635/2.605	3.13	0.32	0.56	0.78
	15/16	1.6																
	1	1.5																
	25mm	*0.7*		*34.0*	*90.4*	*6.35*	*38.1*	*55.6*	*19.1*	*11.2*	*22.4*	*35.1*	*33.5*	*66.93/66.17*	*79.5*	*8.1*	*14.2*	*19.8*
206	1-1/16	2.9	NS308	1.52	4.31	0.250	2.50	2.69	3/4	0.50	0.94	1.38	1.57	3.510/3.480	4.13	0.32	0.58	0.94
	1-1/8	2.8																
	1-3/16	2.7																
	1-1/4	2.6																
	30mm	*1.2*		*38.6*	*109.5*	*6.35*	*63.5*	*68.3*	*19.1*	*12.7*	*23.9*	*35.1*	*39.9*	*89.15/88.39*	*104.9*	*8.1*	*14.7*	*23.9*
207	1-1/4	2.8	NS308	1.71	4.50	0.250	2.50	2.69	3/4	0.50	0.94	1.38	1.84	3.510/3.480	4.13	0.32	0.67	1.04
	1-5/16	2.7																
	1-3/8	2.6																
	1-7/16	2.5																
	35mm	*1.2*		*43.4*	*114.3*	*6.35*	*63.5*	*68.3*	*19.1*	*12.7*	*23.9*	*35.1*	*46.7*	*89.15/88.39*	*104.9*	*8.1*	*17.0*	*26.4*

FEATURES/BENEFITS PAGE B4-3	HOW TO ORDER/NOMENCLATURE PAGE B4-5	SELECTION PAGE B4-6	ACCESSORIES PAGE B4-98

SELECTION/DIMENSIONS

DODGE®



Setscrew Ball Bearings
SC NORMAL DUTY NARROW SLOT TAKE-UP BEARINGS

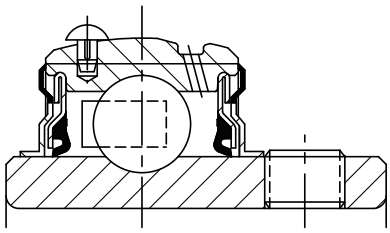

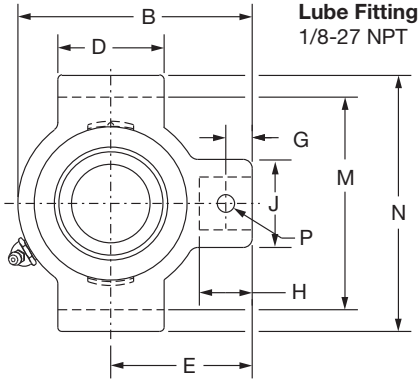

Lube Fitting Thread Size:
1/8-27 NPT

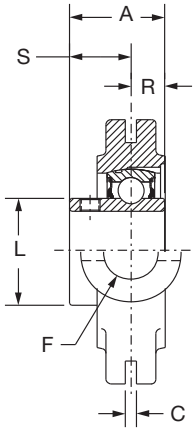

Series	Shaft Size	Standard		Sealed For Life	
		Part No.	Description	Part No.	Description
208	1-1/2	**125156**	NSTU-SC-108	**@**	NSTU-SC-108-NL
	1-5/8	**125370**	NSTU-SC-110	**@**	NSTU-SC-110-NL
	40mm	***125904***	*NSTU-SC-40M*	**@**	*NSTU-SC-40M-NL*
209	1-5/8	**065593**	NSTU-SC-110L	**@**	NSTU-SC-110L-NL
	1-11/16	**125157**	NSTU-SC-111	**052939**	NSTU-SC-111-NL
	1-3/4	**125371**	NSTU-SC-112	**068184**	NSTU-SC-112-NL
	45mm	***125905***	*NSTU-SC-45M*	**@**	*NSTU-SC-45M-NL*
210	1-15/16	**125158**	NSTU-SC-115	**125159**	NSTU-SC-115-NL
	2	**125372**	NSTU-SC-200	**068659**	NSTU-SC-200-NL
	50mm	***125906***	*NSTU-SC-50M*	**@**	*NSTU-SC-50M-NL*
211	2	**135171**	NSTU-SCM-200	**@**	NSTU-SCM-200-NL
	2-3/16	**125160**	NSTU-SC-203	**@**	NSTU-SC-203-NL
	2-1/4	**125373**	NSTU-SC-204	**@**	NSTU-SC-204-NL
	55mm	***125907***	*NSTU-SC-55M*	**@**	*NSTU-SC-55M-NL*
212	2-1/4	**135172**	NSTU-SCM-204	**126544**	NSTU-SCM-204-NL
	2-7/16	**125162**	NSTU-SC-207	**073430**	NSTU-SC-207-NL
	60mm	***125908***	*NSTU-SC-60M*	**@**	*NSTU-SC-60M-NL*

@ Assembled to order

See B15-9 for Take-Up Frames

Series	Shaft Size	Weight lbs. kgs.	Take-Up Frame No. Ref.	A	B	C *	D	E	F Screw Dia	G	H	J	L	M	N	P Pin Dia	R	S
208	1-1/2	4.7	NS400	1.94	5.38	0.313	3.00	3.25	7/8	0.66	1.16	1.63	2.05	4.015/3.985	4.75	0.38	0.75	1.19
	1-5/8	4.6																
	40mm	*2.1*		*49.3*	*136.7*	*7.95*	*76.2*	*82.6*	*22.2*	*16.8*	*29.5*	*41.4*	*52.1*	*101.98/101.22*	*120.7*	*9.7*	*19.1*	*30.2*
209	1-5/8	4.9	NS400	1.94	5.44	0.313	3.00	3.25	7/8	0.72	1.22	1.63	2.22	4.015/3.985	4.75	0.38	0.75	1.19
	1-11/16	4.8																
	1-3/4	4.7																
	45mm	*2.1*		*49.3*	*138.2*	*7.95*	*76.2*	*82.6*	*22.2*	*18.3*	*31.0*	*41.4*	*56.4*	*101.98/101.22*	*120.7*	*9.7*	*19.1*	*30.2*
210	1-15/16	4.9	NS400	1.94	5.50	0.313	3.00	3.25	7/8	0.59	1.09	1.63	2.43	4.015/3.985	4.75	0.38	0.75	1.19
	2	4.8																
	50mm	*2.2*		*49.3*	*139.7*	*7.95*	*76.2*	*82.6*	*22.2*	*15.0*	*27.7*	*41.4*	*61.7*	*101.98/101.22*	*120.7*	*9.7*	*19.1*	*30.2*
211	2	6.8	NS407	2.22	6.13	0.313	3.50	3.63	1	0.69	1.28	1.75	2.71	4.448/4.418	5.38	0.44	0.87	1.35
	2-3/16	6.6																
	2-1/4	6.5																
	55mm	*3.0*		*56.4*	*155.7*	*7.95*	*88.9*	*92.2*	*25.4*	*17.5*	*32.5*	*44.5*	*68.8*	*112.98/112.22*	*136.7*	*11.2*	*22.1*	*34.3*
212	2-1/4	8.7	NS415	2.31	6.69	0.313	3.75	3.88	1	0.69	1.28	1.63	2.97	4.947/4.917	5.75	0.44	0.90	1.41
	2-7/16	8.4																
	60mm	*4.9*		*58.7*	*169.9*	*7.95*	*95.3*	*98.6*	*25.4*	*17.5*	*32.5*	*41.4*	*75.4*	*125.65/124.89*	*146.1*	*11.2*	*22.9*	*35.8*

#+.010, -.020" +.25mm, -.50mm

DODGE®



Setscrew Ball Bearings

SCM MEDIUM DUTY NARROW SLOT TAKE-UP BEARINGS

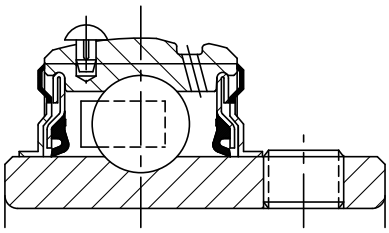

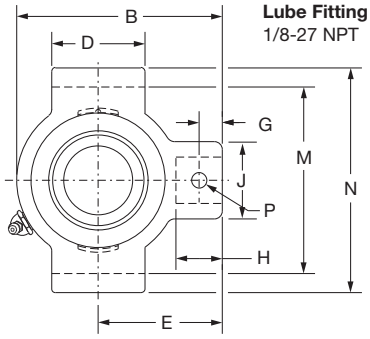

Lube Fitting Thread Size:
1/8-27 NPT

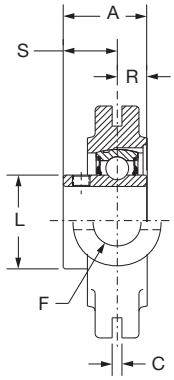

Series	Shaft Size	Part No.	Description
206	1	**135102**	NSTU-SCM-100
	25mm	***125980***	*NSTU-SCM-25M*
207	1-3/16	**135081**	NSTU-SCM-103
	1-1/4	**125154**	NSTU-SC-104
	30mm	***125981***	*NSTU-SCM-30M*
208	1-7/16	**135105**	NSTU-SCM-107
	35mm	***125982***	*NSTU-SCM-35M*
209	1-1/2	**135106**	NSTU-SCM-108
	1-5/8	**065593**	NSTU-SC-110L
	40mm	***125983***	*NSTU-SCM-40M*
210	1-11/16	**135107**	NSTU-SCM-111
	1-3/4	**135170**	NSTU-SCM-112
	45mm	***125984***	*NSTU-SCM-45M*
211	1-15/16	**135109**	NSTU-SCM-115
	2	**135171**	NSTU-SCM-200
	50mm	***125985***	*NSTU-SCM-50M*
212	2-3/16	**135111**	NSTU-SCM-203
	2-1/4	**135172**	NSTU-SCM-204
	55mm	***125986***	*NSTU-SCM-55M*

@ Assembled to order

Series	Shaft Size	Weight lbs. kgs.	Take-Up Frame No. Ref	A	B	C	D	E	F Bolt Dia.	G	H	J	L	M	N	P Pin Dia.	R	S
206	1	3.0	NS308	1.52	4.31	0.250	2.50	2.69	3/4	0.50	0.94	1.38	1.57	3.510/3.480	4.13	0.32	0.58	0.94
	25mm	*1.2*		*38.6*	*109.5*	*6.35*	*63.5*	*68.3*	*19.1*	*12.7*	*23.9*	*35.1*	*39.9*	*89.15/88.39*	*104.9*	*8.1*	*14.7*	*23.9*
207	1-3/16	2.9	NS308	1.71	4.50	0.250	2.50	2.69	3/4	0.50	0.94	1.38	1.84	3.510/3.480	4.13	0.32	0.67	1.04
	1-1/4	2.8																
	30mm	*1.3*		*43.4*	*114.3*	*6.35*	*63.5*	*68.3*	*19.1*	*12.7*	*23.9*	*35.1*	*46.7*	*89.15/88.39*	*104.9*	*8.1*	*17.0*	*26.4*
208	1-7/16	4.7	NS400	1.94	5.38	0.313	3.00	3.25	7/8	0.66	1.16	1.63	2.05	4.015/3.985	4.75	0.38	0.75	1.19
	35mm	*2.2*		*49.3*	*136.7*	*7.95*	*76.2*	*82.6*	*22.2*	*16.8*	*29.5*	*41.4*	*52.1*	*101.98/101.22*	*120.7*	*9.7*	*19.1*	*30.2*
209	1-1/2	5.0	NS400	1.94	5.44	0.313	3.00	3.25	7/8	0.72	1.22	1.63	2.22	4.015/3.985	4.75	0.38	0.75	1.19
	1-5/8	4.9																
	40mm	*2.3*		*49.3*	*138.2*	*7.95*	*76.2*	*82.6*	*22.2*	*18.3*	*31.0*	*41.4*	*56.4*	*101.98/101.22*	*120.7*	*9.7*	*19.1*	*30.2*
210	1-11/16	5.3	NS400	1.94	5.50	0.313	3.00	3.25	7/8	0.59	1.09	1.63	2.43	4.015/3.985	4.75	0.38	0.75	1.19
	1-3/4	5.2																
	45mm	*2.4*		*49.3*	*139.7*	*7.95*	*76.2*	*82.6*	*22.2*	*15.0*	*27.7*	*41.4*	*61.7*	*101.98/101.22*	*120.7*	*9.7*	*19.1*	*30.2*
211	1-15/16	7.0	NS407	2.22	6.13	0.313	3.50	3.63	1	0.69	1.28	1.75	2.71	4.448/4.418	5.38	0.44	0.87	1.35
	2	6.8																
	50mm	*3.2*		*56.4*	*155.7*	*7.95*	*88.9*	*92.2*	*25.4*	*17.5*	*32.5*	*44.5*	*68.8*	*112.98/112.22*	*136.7*	*11.2*	*22.1*	*34.3*
212	2-3/16	8.9	NS415	2.31	6.69	0.313	3.75	3.88	1	0.69	1.28	1.63	2.97	4.947/4.917	5.75	0.44	0.90	1.41
	2-1/4	8.7																
	55mm	*4.0*		*58.7*	*169.9*	*7.95*	*95.3*	*98.6*	*25.4*	*17.5*	*32.5*	*41.4*	*75.4*	*125.65/124.89*	*146.1*	*11.2*	*22.9*	*35.8*

FEATURES/BENEFITS PAGE B4-3 | HOW TO ORDER/NOMENCLATURE PAGE B4-5 | SELECTION PAGE B4-6 | ACCESSORIES PAGE B4-98

SELECTION/DIMENSIONS

Setscrew Ball Bearings

SC NORMAL DUTY WIDE SLOT TAKE-UP BEARINGS

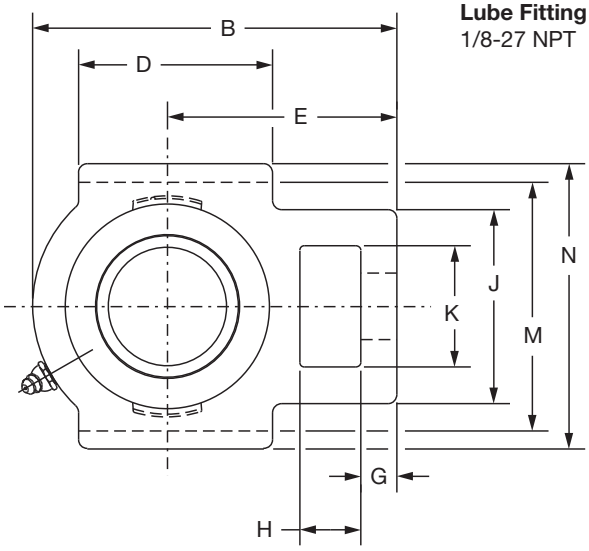

Lube Fitting Thread Size:
1/8-27 NPT

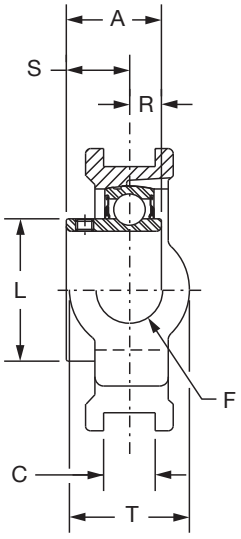

Series	Shaft Size	Standard		No Lube/Sealed for Life (-NL)	
		Part No.	Description	Part No.	Description
204	1/2	**125343**	WSTU-SC-008	**@**	WSTU-SC-008-NL
	5/8	**125344**	WSTU-SC-010	**@**	WSTU-SC-010-NL
	3/4	**125010**	WSTU-SC-012	**074935**	WSTU-SC-012-NL
	20mm	***125910***	*WSTU-SC-20M*	**@**	*WSTU-SC-20M-NL*
205	7/8	**125356**	WSTU-SC-014	**@**	WSTU-SC-014-NL
	15/16	**125011**	WSTU-SC-015	**@**	WSTU-SC-015-NL
	1	**125012**	WSTU-SC-100	**@**	WSTU-SC-100-NL
	25mm	***125911***	*WSTU-SC-25M*	**@**	*WSTU-SC-25M-NL*
206	1-1/16	**125357**	WSTU-SC-101	**@**	WSTU-SC-101-NL
	1-1/8	**125358**	WSTU-SC-102	**@**	WSTU-SC-102-NL
	1-3/16	**125113**	WSTU-SC-103	**@**	WSTU-SC-103-NL
	1-1/4	**123175**	WSTU-SC-104S	**@**	WSTU-SC-104S-NL
	30mm	***125912***	*WSTU-SC-30M*	**@**	*WSTU-SC-30M-NL*
207	1-1/4	**125360**	WSTU-SC-104	**073793**	WSTU-SC-104-NL
	1-5/16	**125359**	WSTU-SC-105	**@**	WSTU-SC-105-NL
	1-3/8	**125361**	WSTU-SC-106	**@**	WSTU-SC-106-NL
	1-7/16	**125114**	WSTU-SC-107	**050846**	WSTU-SC-107-NL
	35mm	***125913***	*WSTU-SC-35M*	**@**	*WSTU-SC-35M-NL*
208	1-1/2	**125120**	WSTU-SC-108	**049829**	WSTU-SC-108-NL
	1-5/8	**125355**	WSTU-SC-110	**@**	WSTU-SC-110-NL
	40mm	***125914***	*WSTU-SC-40M*	**@**	*WSTU-SC-40M-NL*

@ Assembled to order

DODGE®



Setscrew Ball Bearings
SC NORMAL DUTY WIDE SLOT TAKE-UP BEARINGS

Series	Shaft Size	Weight lbs. kgs.	Take-Up Frame Size	A	B	C	D	E	F	G	H
204	1/2	2.1	WS300	1.23	3.69	0.531	2.00	2.38	5/8	0.38	0.63
	5/8	2.0									
	3/4	1.9									
	20mm	*0.9*		*31.2*	*93.7*	*13.49*	*50.8*	*60.5*	*15.9*	*9.7*	*16.0*
205	7/8	2.2	WS300	1.34	3.81	0.531	2.00	2.44	5/8	0.38	0.63
	15/16	2.1									
	1	2.0									
	25mm	*1.0*		*34.0*	*96.8*	*13.49*	*50.8*	*62.0*	*15.9*	*9.7*	*16.0*
206	1-1/16	3.1	WS308	1.52	4.38	0.531	2.25	2.75	3/4	0.38	0.63
	1-1/8	3.0									
	1-3/16	2.9									
	1-1/4	2.8									
	30mm	*1.3*		*38.6*	*111.3*	*13.49*	*57.2*	*69.9*	*19.1*	*9.7*	*16.0*
207	1-1/4	3.8	WS308	1.71	4.87	0.531	2.50	3.06	3/4	0.50	0.63
	1-5/16	3.7									
	1-3/8	3.6									
	1-7/16	3.5									
	35mm	*1.6*		*43.4*	*123.7*	*13.49*	*63.5*	*77.7*	*19.1*	*12.7*	*16.0*
208	1-1/2	6.1	WS400	1.94	5.69	0.688	3.25	3.50	1	0.63	0.75
	1-5/8	6.0									
	40mm	*2.8*		*49.3*	*144.5*	*17.48*	*82.6*	*88.9*	*25.4*	*16.0*	*19.1*

Series	Shaft Size	J	K	L	M	N	R	S	T
204	1/2	2.00	1.25	1.12	2.985/3.015	3.63	0.50	0.73	1.38
	5/8								
	3/4								
	20mm	*50.8*	*31.8*	*28.4*	*75.82/76.58*	*92.2*	*12.7*	*18.5*	*35.1*
205	7/8	2.00	1.31	1.32	2.985/3.015	3.63	0.56	0.78	1.38
	15/16								
	1								
	25mm	*50.8*	*33.3*	*33.5*	*75.82/76.58*	*92.2*	*14.2*	*19.8*	*35.1*
206	1-1/16	2.19	1.44	1.57	3.480/3.510	4.13	0.58	0.94	1.63
	1-1/8								
	1-3/16								
	1-1/4								
	30mm	*55.6*	*36.6*	*39.9*	*88.39/89.15*	*104.9*	*14.7*	*23.9*	*41.3*
207	1-1/4	2.50	1.44	1.84	3.480/3.510	4.13	0.67	1.04	1.63
	1-5/16								
	1-3/8								
	1-7/16								
	35mm	*63.5*	*36.6*	*46.7*	*88.39/89.15*	*104.9*	*17.0*	*26.4*	*41.3*
208	1-1/2	3.25	1.94	2.05	3.985/4.015	4.50	0.75	1.19	1.94
	1-5/8								
	40mm	*82.6*	*49.3*	*52.1*	*101.22/101.98*	*114.3*	*19.1*	*30.2*	*49.3*

SELECTION/DIMENSIONS

Setscrew Ball Bearings
SC NORMAL DUTY WIDE SLOT TAKE-UP BEARINGS

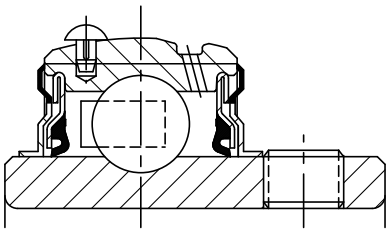

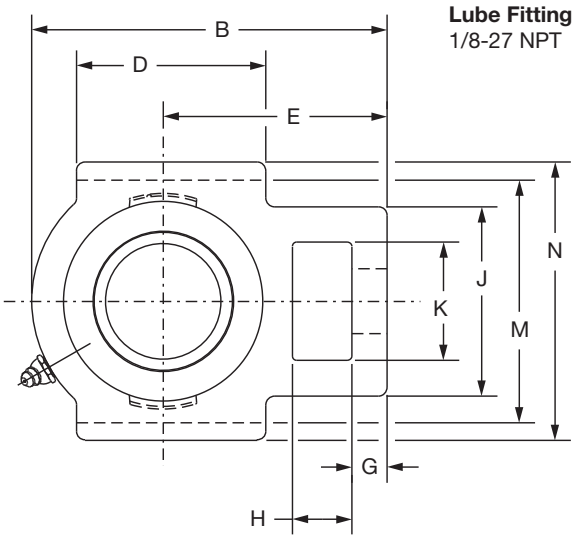

Lube Fitting Thread Size:
1/8-27 NPT

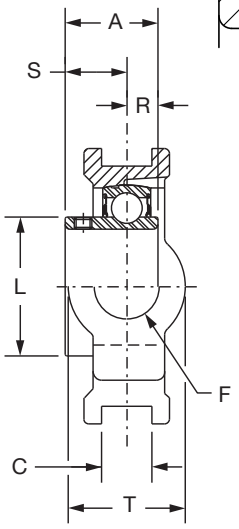

Series	Shaft Size	Standard		No Lube/Sealed for Life (-NL)	
		Part No.	Description	Part No.	Description
209	1-5/8	**125151**	WSTU-SC-110L	@	WSTU-SC-110L-NL
	1-11/16	**125115**	WSTU-SC-111	@	WSTU-SC-111-NL
	1-3/4	**125362**	WSTU-SC-112	@	WSTU-SC-112-NL
	1-13/16	**125121**	WSTU-SC-113	@	WSTU-SC-113-NL
	45mm	***125915***	*WSTU-SC-45M*	@	*WSTU-SC-45M-NL*
210	1-15/16	**125116**	WSTU-SC-115	**125071**	WSTU-SC-115-NL
	2	**125363**	WSTU-SC-200	**062691**	WSTU-SC-200-NL
	50mm	***125916***	*WSTU-SC-50M*	***068374***	*WSTU-SC-50M-NL*
211	2	**135183**	WSTU-SCM-200	**058705**	WSTU-SCM-200-NL
	2-3/16	**125117**	WSTU-SC-203	@	WSTU-SC-203-NL
	2-1/4	**125364**	WSTU-SC-204	@	WSTU-SC-204-NL
	55mm	***125917***	*WSTU-SC-55M*	@	*WSTU-SC-55M-NL*
212	2-1/4	**135184**	WSTU-SCM-204	@	WSTU-SCM-204-NL
	2-7/16	**125118**	WSTU-SC-207	@	WSTU-SC-207-NL
	60mm	***125918***	*WSTU-SC-60M*	@	*WSTU-SC-60M-NL*
214	2-1/2	**135185**	WSTU-SCM-208	@	WSTU-SCM-208-NL
	2-11/16	**064704**	WSTU-SC-211	@	WSTU-SC-211-NL
	70mm	***062975***	*WSTU-SC-70M*	@	*WSTU-SC-70M-NL*
215	2-15/16	**125119**	WSTU-SC-215	@	WSTU-SC-215-NL
	75mm	***125919***	WSTU-SC-75M	@	WSTU-SC-75M-NL

@ Assembled to order

DODGE®



Setscrew Ball Bearings
SC NORMAL DUTY WIDE SLOT TAKE-UP BEARINGS

Series	Shaft Size	Weight lbs *kgs.*	Take-Up Frame Size	A	B	C	D	E	F Screw Dia.	G
	1-5/8	6.1		1.94	5.63	0.688	3.25	3.44	1	0.63
	1-11/16	6.0								
209	1-3/4	5.9	WS400							
	1-13/16	5.8								
	45mm	*2.7*		*49.3*	*143.0*	*17.48*	*82.6*	*87.4*	*25.4*	*16.0*
	1-15/16	6.4		1.94	5.82	0.688	3.38	3.56	1	0.63
210	2	6.2	WS400							
	50mm	*2.9*		*49.3*	*147.8*	*17.48*	*85.9*	*90.4*	*25.4*	*16.0*
	2	10.1		*2.22*	*6.69*	*1.063*	*3.75*	*4.19*	*1-1/4*	*0.75*
211	2-3/16	10.0	WS502							
	2-1/4	9.8								
	55mm	*4.5*		*56.4*	*169.9*	*27.00*	*95.3*	*106.4*	*31.8*	*19.1*
	2-1/4	11.2		2.31	7.50	1.063	4.00	4.69	1-1/4	0.75
212	2-7/16	10.8	WS502							
	60mm	*4.9*		*58.7*	*190.5*	*27.00*	*101.6*	*119.1*	*31.8*	*19.1*
	2-1/2	18.0		2.54	8.56	1.063	4.75	5.38	1-1/2	*0.81*
214	2-11/16	17.8	WS515							
	70mm	*8.0*		*64.5*	*217.4*	*27.0*	*120.7*	*136.7*	*38.1*	*20.6*
215	2-15/16	18.9	WS515	2.33	9.13	1.063	4.75	5.50	1-1/2	0.81
	75mm	*8.6*		*59.2*	*231.9*	*27.00*	*120.7*	*139.7*	*38.1*	*20.6*

Series	Shaft Size	H	J	K	L	M	N	R	S	T
	1-5/8	0.75	3.25	1.94	2.22	3.985/4.015	4.75	0.75	1.19	1.94
	1-11/16									
209	1-3/4									
	1-13/16									
	45mm	*19.1*	*82.6*	*49.3*	*56.4*	*101.22/101.98*	*120.7*	*19.1*	*30.2*	*49.3*
	1-15/16	0.75	3.25	1.94	2.43	3.985/4.015	4.75	0.75	1.19	1.94
210	2									
	50mm	*19.1*	*82.6*	*49.3*	*61.7*	*101.22/101.98*	*120.7*	*19.1*	*30.2*	*49.3*
	2	*1.00*	*4.00*	*2.50*	*2.71*	*5.110/5.140*	*5.88*	*0.87*	*1.35*	*2.50*
211	2-3/16									
	2-1/4									
	55mm	*25.4*	*101.6*	*63.5*	*68.8*	*129.79/130.56*	*149.4*	*22.1*	*34.3*	*63.5*
	2-1/4	1.25	4.00	2.50	2.97	5.110/5.140	5.88	0.90	1.41	2.50
212	2-7/16									
	60mm	*31.8*	*101.6*	*63.5*	*75.4*	*129.79/130.56*	*149.4*	*22.9*	*35.8*	*63.5*
	2-1/2	1.25	4.38	2.75	3.31	5.923/5.953	6.56	1.06	1.48	2.75
214	2-11/16									
	70mm	*31.8*	*111.3*	*69.9*	*84.1*	*150.44/151.21*	*166.6*	*26.9*	*37.6*	*69.9*
	2-15/16	1.25	4.38	2.75	3.62	5.923/5.953	6.69	0.86	1.47	2.75
215	*75mm*	*31.8*	*111.3*	*69.9*	*91.9*	*150.44/151.21*	*169.9*	*21.8*	*37.3*	*69.9*

*+ or -.015", + or -.38mm

+.010, -.020" +.25mm, -.50mm

FEATURES/BENEFITS PAGE B4-3	HOW TO ORDER/NOMENCLATURE PAGE B4-5	SELECTION PAGE B4-6	ACCESSORIES PAGE B4-98

SELECTION/DIMENSIONS

Setscrew Ball Bearings
SCM MEDIUM DUTY WIDE SLOT TAKE-UP BEARINGS

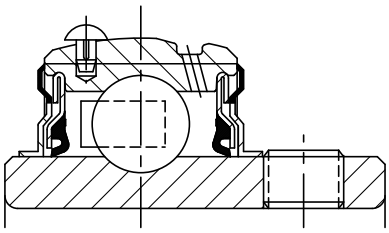

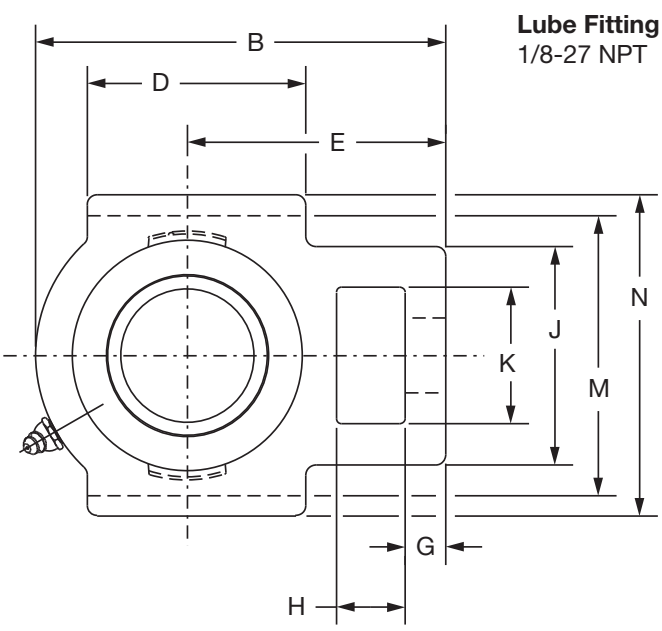

Lube Fitting Thread Size:
1/8-27 NPT

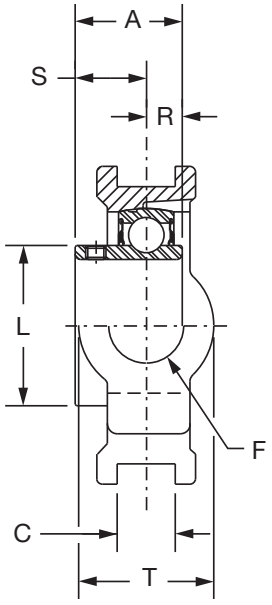

Series	Shaft Size	Part No.	Description
206	1	**135117**	WSTU-SCM-100
	25mm	***125989***	*WSTU-SCM-25M*
207	1-3/16	**135118**	WSTU-SCM-103
	1-1/4	**125360**	WSTU-SC-104
	30mm	***125990***	*WSTU-SCM-30M*
208	1-7/16	**135116**	WSTU-SCM-107
	35mm	***125991***	*WSTU-SCM-35M*
209	1-1/2	**135120**	WSTU-SCM-108
	40mm	***125992***	*WSTU-SCM-40M*
210	1-11/16	**135121**	WSTU-SCM-111
	1-3/4	**135182**	WSTU-SCM-112
	45mm	***125993***	*WSTU-SCM-45M*



Setscrew Ball Bearings
SCM MEDIUM DUTY WIDE SLOT TAKE-UP BEARINGS

Series	Shaft Size	Weight lbs. kgs.	Take-Up Frame No. Ref.	A	B	C	D	E	F Screw Dia.	G
206	1	2.9	WS308	1.52	4.38	0.531	2.25	2.75	3/4	0.38
	25mm	*1.4*		*38.6*	*111.3*	*13.49*	*57.2*	*69.9*	*19.1*	*9.7*
207	1-3/16	3.9	WS308	1.71	4.87	0.531	2.50	3.06	3/4	0.50
	1-1/4	3.8								
	30mm	*1.7*		*43.4*	*123.7*	*13.49*	*63.5*	*77.7*	*19.1*	*12.7*
208	1-7/16	6.1	WS400	1.94	5.69	0.688	3.25	3.50	1	0.63
	35mm	*2.9*		*49.3*	*144.5*	*17.48*	*82.6*	*88.9*	*25.4*	*16.0*
209	1-1/2	6.0	WS400	1.94	5.63	0.688	3.25	3.44	1	0.63
	40mm	*2.8*		*49.3*	*143.0*	*17.48*	*82.6*	*87.4*	*25.4*	*16.0*
210	1-11/16	6.4	WS400	1.94	5.82	0.688	3.38	3.56	1	0.63
	1-3/4	6.4								
	45mm	*3.0*		*49.3*	*147.8*	*17.48*	*85.9*	*90.4*	*25.4*	*16.0*

Series	Shaft Size	H	J	K	L	M	N	R	S	T
206	1	0.63	2.19	1.44	1.57	3.480/3.510	4.13	0.58	0.94	1.63
	25mm	*16.0*	*55.6*	*36.6*	*39.9*	*88.39/89.15*	*104.9*	*14.7*	*23.9*	*41.3*
207	1-3/16	0.63	2.50	1.44	1.84	3.480/3.510	4.13	0.67	1.04	1.63
	1-1/4									
	30mm	*16.0*	*63.5*	*36.6*	*46.7*	*88.39/89.15*	*104.9*	*17.0*	*26.4*	*41.3*
208	1-7/16	0.75	3.25	1.94	2.05	3.985/4.015	4.50	0.75	1.19	1.94
	35mm	*19.1*	*82.6*	*49.3*	*52.1*	*101.22/101.98*	*114.3*	*19.1*	*30.2*	*49.3*
209	1-1/2	0.75	3.25	1.94	2.22	3.985/4.015	4.75	0.75	1.19	1.94
	40mm	*19.1*	*82.6*	*49.3*	*56.4*	*101.22/101.98*	*120.7*	*19.1*	*30.2*	*49.3*
210	1-11/16	0.75	3.25	1.94	2.43	3.985/4.015	4.75	0.75	1.19	1.94
	1-3/4									
	45mm	*19.1*	*82.6*	*49.3*	*61.7*	*101.22/101.98*	*120.7*	*19.1*	*30.2*	*49.3*

FEATURES/BENEFITS PAGE B4-3 | HOW TO ORDER/NOMENCLATURE PAGE B4-5 | SELECTION PAGE B4-6 | ACCESSORIES PAGE B4-98

SELECTION/DIMENSIONS

Setscrew Ball Bearings
SCM MEDIUM DUTY WIDE SLOT TAKE-UP BEARINGS

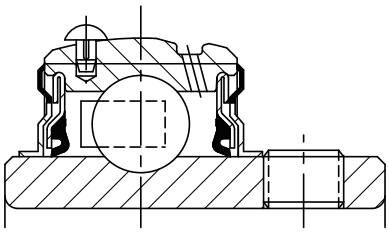

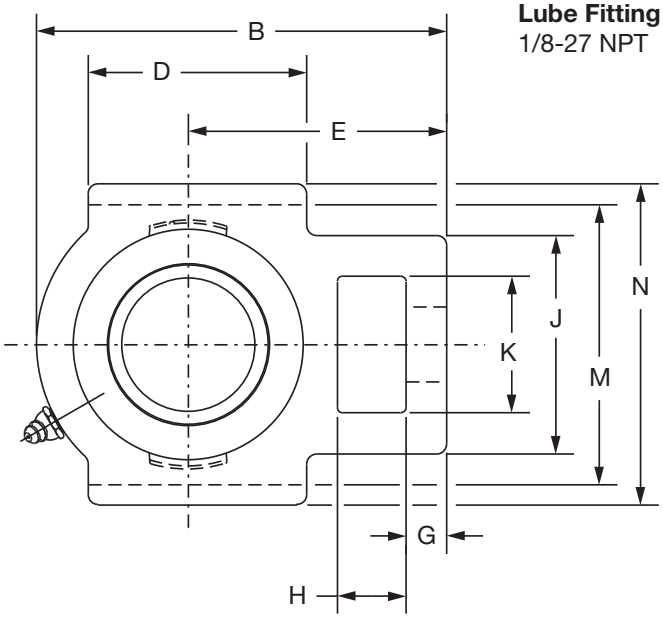

Lube Fitting Thread Size:
1/8-27 NPT

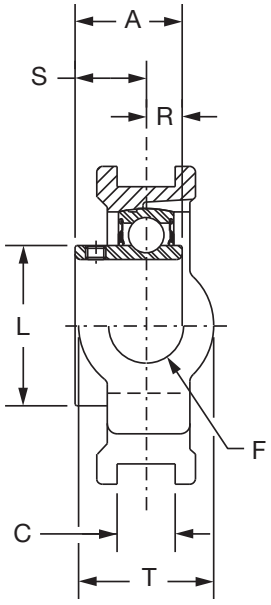

Series	Shaft Size	Part No.	Description
211	1-15/16	**135123**	WSTU-SCM-115
	2	**135183**	WSTU-SCM-200
	50mm	***125994***	*WSTU-SCM-50M*
212	2-3/16	**135125**	WSTU-SCM-203
	2-1/4	**135184**	WSTU-SCM-204
	55mm	***125995***	*WSTU-SCM-55M*
214	2-7/16	**135127**	WSTU-SCM-207
	2-1/2	**135185**	WSTU-SCM-208
	65mm	***125996***	*WSTU-SCM-65M*
215	2-11/16	**135129**	WSTU-SCM-211
	70mm	***125997***	*WSTU-SCM-70M*
216	2-15/16	**135130**	WSTU-SCM-215
	3	**135181**	WSTU-SCM-300
	75mm	***125998***	WSTU-SCM-75M



Setscrew Ball Bearings
SCM MEDIUM DUTY WIDE SLOT TAKE-UP BEARINGS

Series	Shaft Size	Weight lbs. kgs.	Take-up Frame No. Ref	A	B	C	D	E	F Screw Dai.	G
211	1-15/16 2 *50mm*	10.1 10.2 *4.7*	WS502	2.22 *56.4*	6.69 *169.9*	1.063 *27.00*	3.75 *95.3*	4.19 *106.4*	1-1/4 *31.8*	0.75 *19.1*
212	2-3/16 2-1/4 *55mm*	11.4 11.2 *5.1*	WS502	2.31 *58.7*	7.50 *190.5*	1.063 *27.00*	4.00 *101.6*	4.69 *119.1*	1-1/4 *31.8*	0.75 *19.1*
214	2-7/16 2-1/2 *65mm*	18.2 18.0 *8.1*	WS515	2.54 *64.5*	8.56 *217.4*	1.063 *27.0*	4.75 *120.7*	5.38 *136.7*	1-1/2 *38.1*	0.81 *20.6*
215	2-11/16 *70mm*	19.0 *8.9*	WS515	2.33 *59.2*	9.13 *231.9*	1.063 *27.00*	4.75 *120.7*	5.50 *139.7*	1-1/2 *38.1*	0.81 *20.6*
216	2-15/16 3 *75mm*	21.7 21.5 *9.5*	WS608	2.38 *60.5*	9.13 *231.6*	1.063 *27.00*	4.75 *120.7*	2.38 *60.5*	1-1/2 *38.1*	0.81 *20.6*

Series	Shaft Size	H	J	K	L	M	N	R	S	T
211	1-15/16 2 *50mm*	1.00 *25.4*	4.00 *101.6*	2.50 *63.5*	2.71 *68.8*	5.110/5.140 *129.79/130.56*	5.88 *149.4*	0.87 *22.1*	1.35 *34.3*	2.50 *63.5*
212	2-3/16 2-1/4 *55mm*	1.25 *31.8*	4.00 *101.6*	2.50 *63.5*	2.97 *75.4*	5.110/5.140 *129.79/130.56*	5.88 *149.4*	0.90 *22.9*	1.41 *35.8*	2.50 *63.5*
214	2-7/16 2-1/2 *65mm*	1.25 *31.8*	4.38 *111.3*	2.75 *69.9*	3.31 *84.1*	5.923/5.953 *150.44/151.21*	6.56 *166.6*	1.06 *26.9*	1.48 *37.6*	2.75 *69.9*
215	2-11/16 *70mm*	1.25 *31.8*	4.38 *111.3*	2.75 *69.9*	3.62 *91.9*	5.923/5.953 *150.44/151.21*	6.69 *169.9*	0.86 *21.8*	1.47 *37.3*	2.75 *69.9*
216	2-15/16 3 *75mm*	1.25 *31.8*	4.38 *111.3*	2.75 *69.9*	3.83 *97.3*	6.485/6.515 *164.72/165.48*	7.25 *184.2*	0.88 *22.4*	1.50 *38.1*	2.75 *69.9*

SELECTION/DIMENSIONS

Setscrew Ball Bearings
TYPE G NORMAL DUTY TOP ANGLE TAKE-UP BEARINGS

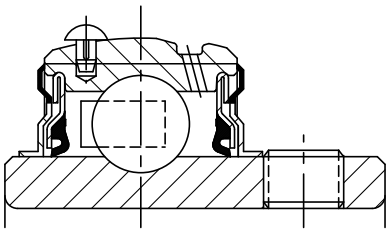

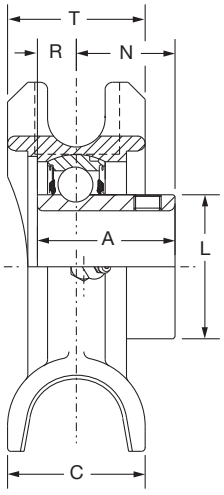

Lube Fitting Thread Size:
1/8-27 NPT

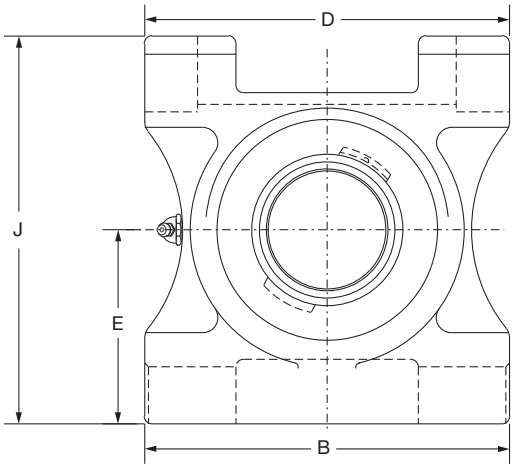

Series	Shaft Size	Part No.	Description
210	1-15/16	**012340**	TP-G-115
	2	**012302**	TP-G-200
211	2	**136081**	TP-GM-200
	2-3/16	**012341**	TP-G-203
	2-1/4	**012303**	TP-G-204
212	2-1/4	**136082**	TP-GM-204
	2-7/16	**012342**	TP-G-207
214	2-1/2	**136083**	TP-GM-208
	2-11/15	**@**	TP-G-211
215	2-15/16	**012343**	TP-G-215

@ Assembled to order

Series	Shaft Size	Weight lbs.	Frame Size	A	B	C	D	E	J	L	N	R	T
210	1-15/16 2	10.2 10.0	TP10	1.94	6.50	2.38	6.00	3.25	6.38	2.43	1.19	0.75	2.38
211	2 2-3/16 2-1/4	12.5 12.4 1.02	TP20	2.22	7.00	2.50	6.75	3.38	7.88	2.71	1.35	0.87	2.38
212	2-1/4 2-7/16	16.0 15.9	TP30	2.31	7.50	2.75	7.00	3.50	7.44	2.97	1.41	0.90	2.75
214	2-1/2 2-11/15	21.3 21.1	TP40	2.54	8.50	2.50	8.00	4.00	8.31	3.31	1.38	1.16	2.75
215	2-15/16	21.2	TP40	2.33	8.50	2.50	8.00	4.00	8.31	3.62	1.37	0.96	2.75

DODGE®



Setscrew Ball Bearings
TYPE GM MEDIUM DUTY TOP ANGLE TAKE-UP BEARINGS

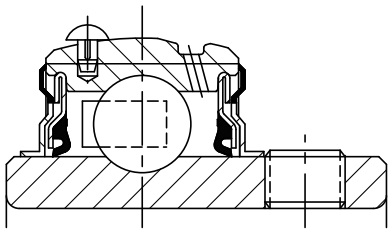

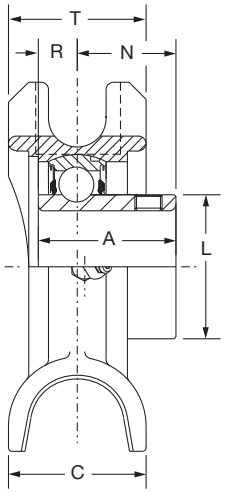

Lube Fitting Thread Size:
1/8-27 NPT

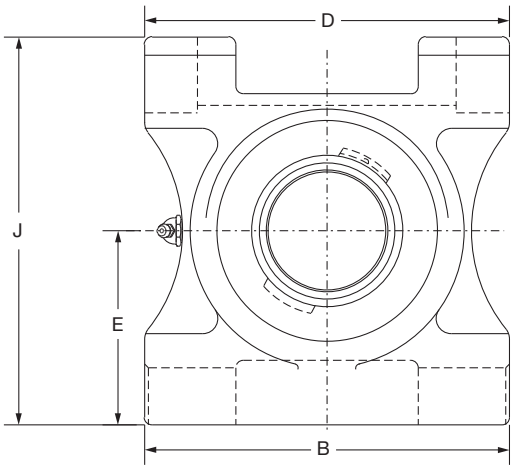

Series	Shaft Size	Part No.	Description
210	1-11/16	**136070**	TP-GM-111
	1-3/4	**136080**	TP-GM-112
211	1-15/16	**136071**	TP-GM-115
	2	**136081**	TP-GM-200
212	2-3/16	**136072**	TP-GM-203
	2-1/4	**136082**	TP-GM-204
214	2-7/16	**136073**	TP-GM-207
	2-1/2	**136083**	TP-GM-208
215	2-11/16	**136076**	TP-GM-211
216	2-15/16	**136074**	TP-GM-215
	3	**136084**	TP-GM-300
218	3-7/16	**136075**	TP-GM-307
	3-1/2	**136085**	TP-GM-308

Series	Shaft Size	Weight lbs.	Frame Size	A	B	C	D	E	J	L	N	R	T
210	1-11/16 1-3/4	10.4 10.0	TP10	1.94	6.50	2.38	6.00	3.25	6.38	2.43	1.19	0.75	2.38
211	1-15/16 2	12.8 12.5	TP20	2.22	7.00	2.50	6.75	3.38	7.88	2.71	1.35	0.87	2.38
212	2-3/16 2-1/4	16.2 16.0	TP30	2.31	7.50	2.75	7.00	3.50	7.44	2.97	1.41	0.90	2.75
214	2-7/16 2-1/2	21.7 21.0	TP40	2.54	8.50	2.50	8.00	4.00	8.31	3.31	1.38	1.16	2.75
215	2-11/16	25.0	TP40	2.33	8.50	2.50	8.00	4.00	8.31	3.62	1.37	0.96	2.75
216	2-15/16 3	29.8 29.5	TP50	2.38	9.50	2.75	9.00	4.50	9.63	3.83	1.41	0.97	3.13
218	3-7/16 3-1/2	40.2 40.0	TP60	2.56	11.00	3.13	10.50	5.50	11.00	4.35	1.54	1.02	3.13

FEATURES/BENEFITS PAGE B4-3	HOW TO ORDER/NOMENCLATURE PAGE B4-5	SELECTION PAGE B4-6	ACCESSORIES PAGE B4-98

SELECTION/DIMENSIONS

Setscrew Ball Bearings
SC NORMAL DUTY SCREW CONVEYOR HANGER BEARINGS

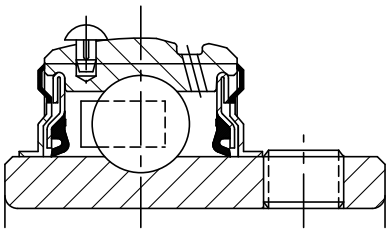

Lube Fitting Thread Size:
1/8-27 NPT

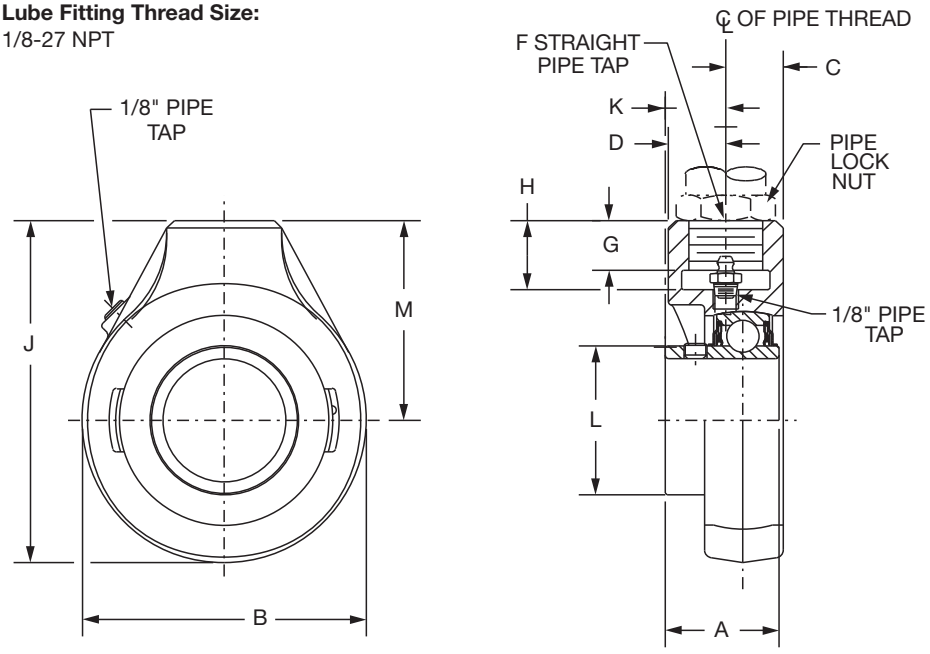

Series	Shaft Size	Part No.	Description
206	1	**057878**	SCHB-SC-100
	1-1/8	**073287**	SCHB-SC-102
207	1-3/16	**057220**	SCHB-SC-103
	1-1/4	**124996**	SCHB-SC-104
	1-3/8	**058630**	SCHB-SC-106
208	1-7/16	**126049**	SCHB-SC-107
	1-1/2	**124290**	SCHB-SC-108
	1-5/8	**124404**	SCHB-SC-110
210	1-11/16	**124408**	SCHB-SC-111
	1-3/4	**124299**	SCHB-SC-112
	1-15/16	**124405**	SCHB-SC-115
	2	**124291**	SCHB-SC-200
212	2-3/16	**124409**	SCHB-SC-203
	2-1/4	**124419**	SCHB-SC-204
	2-7/16	**124292**	SCHB-SC-207
216	2-15/16	**124406**	SCHB-SC-215
	3	**124293**	SCHB-SC-300
218	3-7/16	**053320**	SCHB-SC-307
	3-1/2	**057361**	SCHB-SC-308

@ Assembled to order



Setscrew Ball Bearings
SC NORMAL DUTY SCREW CONVEYOR HANGER BEARINGS

Series	Shaft Size	Weight lbs.	A	B	C	D	F*	G	H	J	K	L	M
206	1 1-1/8	3.0	1.52	3.13	0.53	1.03	3/4-14	0.75	0.94	4.06	0.89	1.57	2.50
207	1-3/16 1-1/4 1-3/8	3.5 3.5 3.5	1.71	3.88	0.82	0.82	3/4-14	0.63	0.94	4.69	0.98	1.84	2.75
208	1-7/16 1-1/2 1-5/8	3.4 3.4 3.8	1.94	4.00	0.83	0.83	3/4-14	0.63	0.94	4.88	1.02	2.05	2.88
210	1-11/16 1-3/4 1-15/16 2	5.4 4.8 4.5 4.4	1.94	4.63	0.94	1.78	1 - 11-1/2	0.81	1.13	5.56	0.91	2.43	3.25
212	2-3/16 2-1/4 2-7/16	5.0 5.0 7.4	2.31	5.50	1.16	1.78	1-1/4 - 11-1/2	1.13	1.44	6.75	1.07	2.97	4.00
216	2-15/16 3	14.0 14.6	2.38	7.00	1.36	1.45	1-1/2 - 11-1/2	1.25	1.69	8.38	1.17	3.83	4.88
218	3-7/16 3-1/2	21.2 21.0	2.56	8.31	1.76	1.74	2 - 11-1/2	1.75	2.19	10.16	1.39	4.35	6.00

Use straight thread for the pipe. Bearing to be secured with a heavy locknut
Pipe plug and lube fitting are factory installed and may be reversed from position shown

NOTE: Inserts use the ProGuard Plus (-FF) seals. 1, 1-3/16, 1-7/16, 1-11/16, 1-3/4, 2-3/16, 2-1/4 2-15/16, 3, 3-7/16 & 3-1/2 use SCM inserts with flingers.

FEATURES/BENEFITS PAGE B4-3	HOW TO ORDER/NOMENCLATURE PAGE B4-5	SELECTION PAGE B4-6	ACCESSORIES PAGE B4-98

SELECTION/DIMENSIONS

Setscrew Ball Bearings
SC NORMAL DUTY HANGER BEARINGS

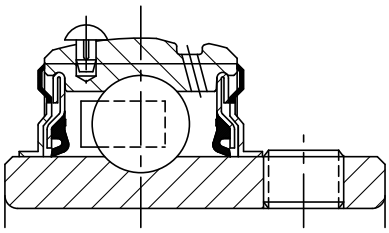

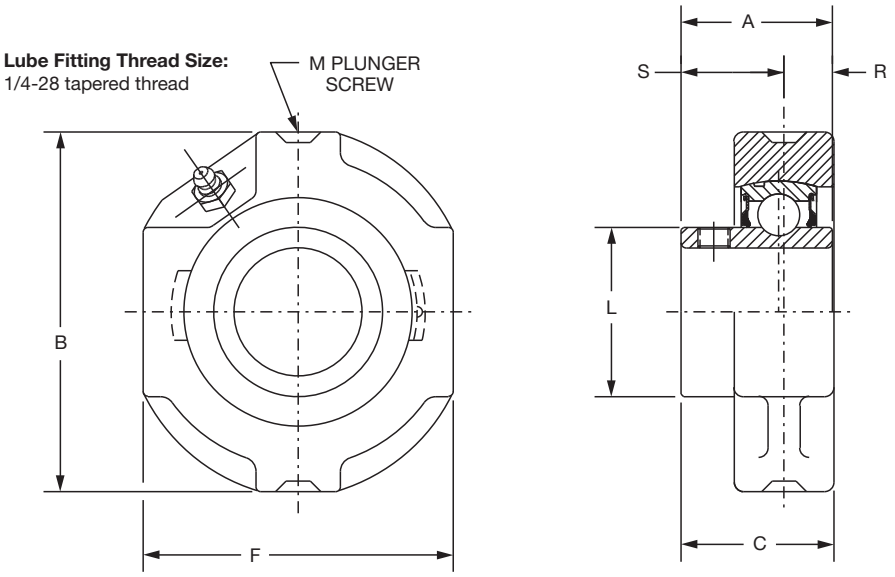

Series	Shaft Size	Part No.	Description
206	1-1/16	**124420**	HNG-SC-101
	1-1/8	**124421**	HNG-SC-102
	1-3/16	**124240**	HNG-SC-103
	1-1/4	**123176**	HNG-SC-104S
207	1-1/4	**124422**	HNG-SC-104
	1-5/16	**124423**	HNG-SC-105
	1-3/8	**124424**	HNG-SC-106
	1-7/16	**124242**	HNG-SC-107
210	1-15/16	**124245**	HNG-SC-115
	2	**124393**	HNG-SC-200

These bearings are designed for use in 4-point hanger frames.

Series	Shaft Size	Weight lbs.	A	B	C	F	L	M	R	S
206	1-1/16	2.0	1.52	3.63	1.50	3.00	1.57	1/2	0.58	0.94
	1-1/8	1.9								
	1-3/16	1.8								
	1-1/4	1.7								
207	1-1/4	2.8	1.71	4.25	1.68	3.50	1.84	1/2	0.67	1.04
	1-5/16	2.6								
	1-3/8	2.4								
	1-7/16	2.2								
210	1-15/16	6.2	1.94	5.00	2.00	4.19	2.43	1/2	0.75	1.19
	2	6.0								



Setscrew Ball Bearings
SC NORMAL DUTY CYLINDRICAL UNITS

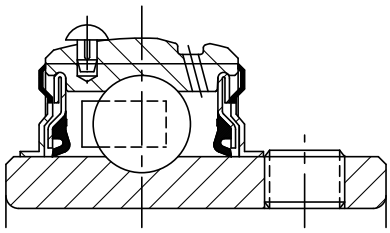

Lube Fitting Thread Size:
1/4-28 tapered thread

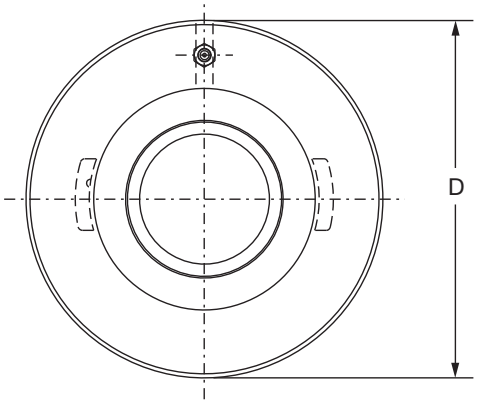

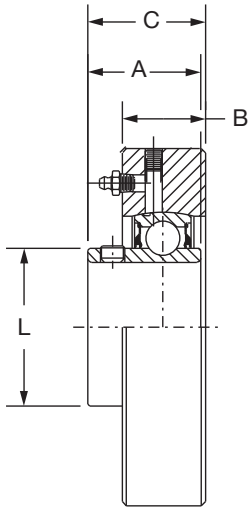

Series	Shaft Size	Part No.	Description
205	7/8	**124394**	CYL-SC-014
	15/16	**124148**	CYL-SC-015
	1	**124149**	CYL-SC-100
206	1-1/16	**124427**	CYL-SC-101
	1-1/8	**124428**	CYL-SC-102
	1-3/16	**124250**	CYL-SC-103
	1-1/4	**123177**	CYL-SC-104S
207	1-1/4	**124251**	CYL-SC-104
	1-5/16	**124429**	CYL-SC-105
	1-3/8	**124430**	CYL-SC-106
	1-7/16	**124253**	CYL-SC-107

Series	Shaft Size	Weight lbs.	A	B	C	D	L
205	7/8	1.4	1.34	0.84	1.19	3.125/3.123	1.32
	15/16	1.3					
	1	1.2					
206	1/16	2.2	1.52	0.94	1.38	3.500/3.498	1.57
	1/18	2.1					
	1-3/16	2.0					
	1-1/4	1.9					
207	1-1/4	2.8	1.71	1.06	1.54	3.875/3.873	1.84
	1-15/16	2.7					
	1-3/8	2.6					
	1-7/16	2.5					

FEATURES/BENEFITS PAGE B4-3	HOW TO ORDER/NOMENCLATURE PAGE B4-5	SELECTION PAGE B4-6	ACCESSORIES PAGE B4-98

SELECTION/DIMENSIONS

DODGE®



Setscrew Ball Bearings
SC NORMAL DUTY BEARING INSERTS

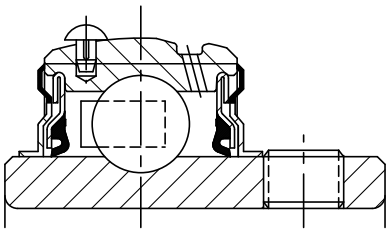

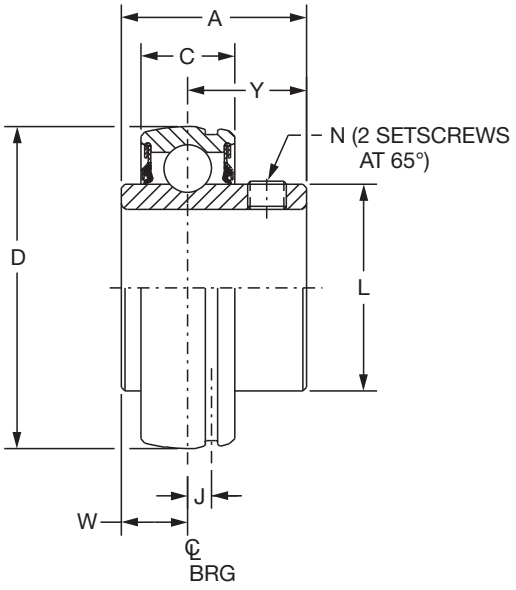

Series	Shaft Size	Standard Insert		High Temp	
		Part No.	Description	Part No.	Description
203	1/2	**123328**	INS-SC-008	---------	INS-SC-008-HT
	5/8	**123329**	INS-SC-010	---------	INS-SC-010-HT
	17mm	***125800***	*INS-SC-17M*	---------	*INS-SC-17M-HT*
204	1/2	**123330**	INS-SC-008L	**@**	INS-SC-008L-HT
	5/8	**123331**	INS-SC-010L	**@**	INS-SC-010L-HT
	3/4	**123332**	INS-SC-012	**052032**	INS-SC-012-HT
	13/16	**074505**	INS-SC-013	**@**	INS-SC-013-HT
	20mm	***125802***	*INS-SC-20M*	**@**	*INS-SC-20M-HT*
205	7/8	**123333**	INS-SC-014	**068013**	INS-SC-014-HT
	15/16	**123334**	INS-SC-015	**@**	INS-SC-015-HT
	1	**123335**	INS-SC-100	**054949**	INS-SC-100-HT
	25mm	***125804***	*INS-SC-25M*	**@**	*INS-SC-25M-HT*
206	1-1/16	**123336**	INS-SC-101	**@**	INS-SC-101-HT
	1-1/8	**123337**	INS-SC-102	**@**	INS-SC-102-HT
	1-3/16	**123338**	INS-SC-103	**067902**	INS-SC-103-HT
	1-1/4	**123469**	INS-SC-104S	**@**	INS-SC-104S-HT
	30mm	***125806***	*INS-SC-30M*	**@**	*INS-SC-30M-HT*
207	1-1/4	**123339**	INS-SC-104	**053776**	INS-SC-104-HT
	1-5/16	**123340**	INS-SC-105	**057201**	INS-SC-105-HT
	1-3/8	**123341**	INS-SC-106	**057354**	INS-SC-106-HT
	1-7/16	**123368**	INS-SC-107	**052645**	INS-SC-107-HT
	35mm	***125808***	*INS-SC-35M*	**@**	*INS-SC-35M-HT*

@ Assembled to order

* 20 piece minimum



Setscrew Ball Bearings
SC NORMAL DUTY BEARING INSERTS

Series	Shaft Size	Weight lbs. *kgs.*	A	C	D	J	L	N	W	Y
	1/2	.25	1.00	0.51	1.5748	0.15	0.96	10-32	0.36	0.64
203	5/8	.23								
	17mm	*.10*	*25.4*	*13.0*	*40.000*	*3.8*	*24.4*	*M5x0.8*	*9.1*	*16.3*
	1/2	.38	1.23	0.58	1.8504	0.15	1.12	1/4-28	0.50	0.73
	5/8	.35								
204	3/4	.32								
	13/16	.29								
	20mm	*.16*	*31.2*	*14.7*	*47.000*	*3.8*	*28.4*	*M6x1*	*12.7*	*18.5*
	7/8	.43	1.34	0.59	2.0472	0.16	1.32	1/4-28	0.56	0.78
205	15/16	.40								
	1	.37								
	25mm	*.18*	*34.0*	*15.0*	*52.000*	*4.1*	*33.5*	*M6x1*	*14.2*	*19.8*
	1-1/16	.67	1.52	0.69	2.4409	0.16	1.57	5/16-24	0.58	0.94
	1-1/8	.63								
206	1-3/16	.60								
	1-1/4	.58								
	30mm	*.27*	*38.6*	*17.5*	*62.000*	*4.1*	*39.9*	*M8x1.25*	*14.7*	*23.9*
	1-1/4	1.02	1.71	0.75	2.8346	0.20	1.84	5/16-24	0.67	1.04
	1-5/16	.97								
207	1-3/8	.92								
	1-7/16	.86								
	35mm	*.44*	*43.4*	*19.1*	*72.000*	*5.1*	*46.7*	*M8x1.25*	*17.0*	*26.4*

FEATURES/BENEFITS PAGE B4-3	HOW TO ORDER/NOMENCLATURE PAGE B4-5	SELECTION PAGE B4-6	ACCESSORIES PAGE B4-98

SELECTION/DIMENSIONS

Setscrew Ball Bearings
SC NORMAL DUTY BEARING INSERTS

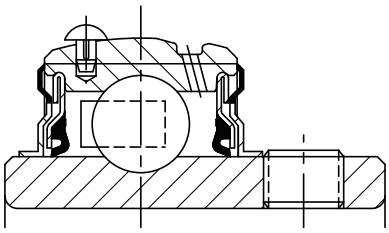

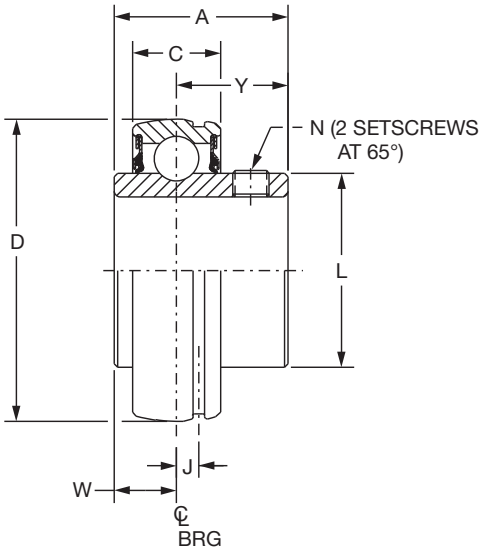

Series	Shaft Size	Standard Insert		High Temp	
		Part No.	Description	Part No.	Description
208	1-1/2	**123342**	INS-SC-108	**064149**	INS-SC-108-HT
	1-5/8	**123343**	INS-SC-110	**@**	INS-SC-110-HT
	40mm	***125810***	*INS-SC-40M*	***064865***	*INS-SC-40M-HT*
209	1-5/8	**045874**	INS-SC-110L	**@**	INS-SC-110L-HT
	1-11/16	**123344**	INS-SC-111	**053565**	INS-SC-111-HT
	1-3/4	**123345**	INS-SC-112	**@**	INS-SC-112-HT
	1-13/16	**054225**	INS-SC-113	**@**	INS-SC-113-HT
	45mm	***125812***	*INS-SC-45M*	***075014***	*INS-SC-45M-HT*
210	1-15/16	**123346**	INS-SC-115	**054019**	INS-SC-115-HT
	2	**123347**	INS-SC-200	**054431**	INS-SC-200-HT
	50mm	***125814***	*INS-SC-50M*	**@**	*INS-SC-50M-HT*
211	2	**123358**	INS-SCM-200	**058157**	INS-SCM-200-HT
	2-3/16	**123348**	INS-SC-203	**@**	INS-SC-203-HT
	2-1/4	**123349**	INS-SC-204	**@**	INS-SC-204-HT
	55mm	***125816***	*INS-SC-55M*	**@**	*INS-SC-55M-HT*
212	2-1/4	**123360**	INS-SCM-204	**073634**	INS-SCM-204-HT
	2-7/16	**123350**	INS-SC-207	**054196**	INS-SC-207-HT
	60mm	***125818***	*INS-SC-60M*	***057802***	*INS-SC-60M-HT*
214	2-1/2	**123362**	INS-SCM-208	**075714**	INS-SCM-208-HT
	2-11/16	**123326**	INS-SC-211	**@**	INS-SC-211-HT
	70mm	***125820***	*INS-SC-70M*	**@**	*INS-SC-70M-HT*
215	2-15/16	**123352**	INS-SC-215	**@**	INS-SC-215-HT
	75mm	***125822***	*INS-SC-75M*	**@**	*INS-SC-75M-HT*
218	*90mm*	**@**	*INS-SC-90M*	**@**	*INS-SC-90M-HT*

@ Assembled to order.

DODGE®



Setscrew Ball Bearings
SC NORMAL DUTY BEARING INSERTS

Series	Shaft Size	Weight lbs kgs.	A	C	D	J	L	N	W	Y
208	1-1/2	1.27	1.94	0.87	3.1496	0.22	2.05	5/16-24	0.75	1.19
	1-5/8	1.13								
	40mm	*0.51*	*49.3*	*22.1*	*80.000*	*5.6*	*52.1*	*M8x1.25*	*19.1*	*30.2*
209	1-5/8	1.49	1.94	0.87	3.3465	0.25	2.22	5/16-24	0.75	1.19
	1-11/16	1.43								
	1-3/4	1.36								
	1-13/16	1.30								
	45mm	*0.62*	*49.3*	*22.1*	*85.000*	*6.4*	*56.4*	*M8x1.25*	*19.1*	*30.2*
210	1-15/16	1.48	1.94	0.87	3.5433	0.25	2.43	3/8-24	0.75	1.19
	2	1.39								
	50mm	*0.67*	*49.3*	*22.1*	*90.000*	*6.4*	*61.7*	*M10x1.5*	*19.1*	*30.2*
211	2	2.26	2.22	0.94	3.9370	0.25	2.71	3/8-24	0.87	1.35
	2-3/16	1.97								
	2-1/4	1.87								
	55mm	*0.89*	*56.4*	*23.9*	*100.000*	*6.4*	*68.8*	*M10x1.5*	*22.1*	*34.3*
212	2-1/4	2.85	2.31	1.02	4.3307	0.25	2.97	3/8-24	0.90	1.41
	2-7/16	2.49								
	60mm	*1.13*	*58.7*	*25.9*	*110.000*	*6.4*	*75.4*	*M10x1.5*	*22.9*	*35.8*
214	2-1/2	4.25	2.54	1.10	4.9213	0.26	3.31	3/8-24	1.06	1.48
	2-11/16	3.60								
	70mm	*1.63*	*64.5*	*27.9*	*125.000*	*6.6*	*84.1*	*M10x1.5*	*26.9*	*37.6*
215	2-15/16	3.86	2.33	1.14	5.1181	0.28	3.62	3/8-24	0.86	1.47
	75mm	*1.85*	*59.2*	*29.0*	*130.000*	*7.1*	*91.9*	*M10x1.5*	*21.8*	*37.3*
218	*90mm*	*3.30*	*65.0*	*34.0*	*160.000*	*7.6*	*110.5*	*M10x1.5*	*24.4*	*40.6*

FEATURES/BENEFITS PAGE B4-3	HOW TO ORDER/NOMENCLATURE PAGE B4-5	SELECTION PAGE B4-6	ACCESSORIES PAGE B4-98

SELECTION/DIMENSIONS

Setscrew Ball Bearings
SCH-E EXPANSION NORMAL DUTY BEARING INSERTS

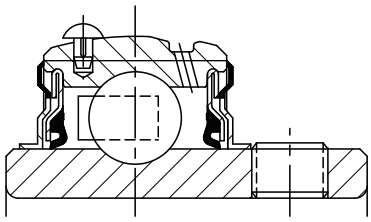

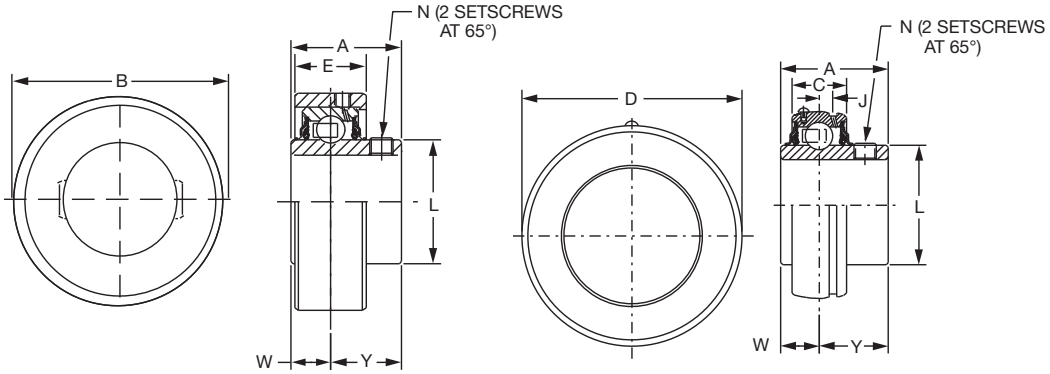

Series	Shaft Size	Expansion	
		Part No.	Description
205	1	@	INS-SCH-100-E
	25mm	@	*INS-SCH-25M-E*
206	1	@	INS-SCMH-100-E
	1-1/16	@	INS-SCH-101-E
	1-1/8	@	INS-SCH-102-E
	1-3/16	**126495**	INS-SCH-103-E
	1-1/4	@	INS-SCH-104S-E
	30mm	***049925***	*INS-SCH-30M-E*
207	1-1/4	@	INS-SCH-104-E
	1-5/16	@	INS-SCH-105-E
	1-3/8	@	INS-SCH-106-E
	1-7/16	**126496**	INS-SCH-107-E
	35mm	@	*INS-SCH-35M-E*
209	1-1/2	@	INS-SCMH-108-E
	1-5/8	@	INS-SCH-110-E
	1-11/16	**068478**	INS-SCH-111-E
	1-3/4	@	INS-SCH-112-E
	45mm	@	*INS-SCH-45M-E*
210	1-11/16	@	INS-SCMH-111-E
	1-3/4	@	INS-SCMH-112-E
	1-15/16	**126497**	INS-SCH-115-E
	2	@	INS-SCH-200-E
	50mm	@	*INS-SCH-50M-E*
211	1-15/16	@	INS-SCMH-115-E
	2	@	INS-SCMH-200-E
	2-3/16	**126498**	INS-SCH-203-E
	2-1/4	@	INS-SCH-204-E
	55mm	@	*INS-SCH-55M-E*
212	2-3/16	@	INS-SCMH-203-E
	2-1/4	@	INS-SCMH-204-E
	2-7/16	**126499**	INS-SCH-207-E
	60mm	@	*INS-SCH-60M-E*

@Assembled to order



Setscrew Ball Bearings
SCH-E EXPANSION NORMAL DUTY BEARING INSERTS

Series	Shaft Size	Weight - Expansion lbs. kgs.	Weight - Non-Exp lbs. kgs.	A	B	C	D	E	J	L	N	W	Y
205	1	0.69	0.37	1.34	2.500	.059	2.0472	0.77	0.16	1.32	1/4-28	0.56	0.78
	25mm	*0.31*	*0.17*	*34.0*	*63.50*	*15.0*	*52.000*	*19.6*	*4.1*	*33.5*	*M6x1*	*14.2*	*19.8*
206	1	1.29	0.69	1.52	2.875	0.69	2.4409	0.94	0.16	1.57	5/16-24	0.58	0.94
	1-1/16	1.26	0.66										
	1-1/8	1.23	0.63										
	1-3/16	1.20	0.60										
	1-1/4	1.18	0.58										
	30mm	*0.54*	*0.26*	*38.6*	*73.03*	*17.5*	*62.000*	*23.9*	*4.1*	*39.9*	*M8x1.25*	*14.7*	*23.9*
207	1-1/4	1.50	1.02	1.71	3.272	0.75	2.8346	1.00	0.20	1.84	5/16-24	0.67	1.04
	1-5/16	1.49	0.97										
	1-3/8	1.48	0.92										
	1-7/16	1.47	0.86										
	35mm	*0.67*	*0.44*	*43.4*	*83.11*	*19.1*	*72.000*	*25.4*	*5.1*	*46.7*	*M8x1.25*	*17.0*	*26.4*
209	1-1/2	2.51	1.62	1.94	3.813	0.87	3.3465	1.20	0.25	2.22	5/16-24	0.75	1.19
	1-5/8	2.48	1.49										
	1-11/16	2.45	1.43										
	1-3/4	2.43	1.36										
	45mm	*1.10*	*1.30*	*49.3*	*96.85*	*22.1*	*85.000*	*30.5*	*6.4*	*56.4*	*M8x1.25*	*19.1*	*30.2*
210	1-11/16	2.56	1.82	1.94	4.000	0.87	3.5433	1.36	0.25	2.43	3/8-24	0.75	1.19
	1-3/4	2.53	1.74										
	1-15/16	2.50	1.48										
	2	2.48	1.39										
	50mm	*1.13*	*0.67*	*49.3*	*101.60*	*22.1*	*90.000*	*34.5*	*6.4*	*61.7*	*M10x1.5*	*19.1*	*30.2*
211	1-15/16	3.46	2.36	2.22	4.475	0.94	3.9370	1.38	0.25	2.71	3/8-24	0.87	1.35
	2	3.43	2.26										
	2-3/16	3.40	1.97										
	2-1/4	3.38	1.87										
	55mm	*1.53*	*0.89*	*56.4*	*113.67*	*23.9*	*100.000*	*35.1*	*6.4*	*68.8*	*M10x1.5*	*22.1*	*34.3*
212	2-3/16	4.56	2.97	2.31	5.035	1.02	4.3307	1.55	0.25	2.97	3/8-24	0.90	1.41
	2-1/4	4.53	2.85										
	2-7/16	4.50	2.49										
	60mm	*2.04*	*1.13*	*58.7*	*127.89*	*25.9*	*110.000*	*39.4*	*6.4*	*75.4*	*M10x1.5*	*22.9*	*35.8*

FEATURES/BENEFITS PAGE B4-3 | HOW TO ORDER/NOMENCLATURE PAGE B4-5 | SELECTION PAGE B4-6 | ACCESSORIES PAGE B4-98

SELECTION/DIMENSIONS

DODGE®



Setscrew Ball Bearings
SCM MEDIUM DUTY BEARING INSERTS

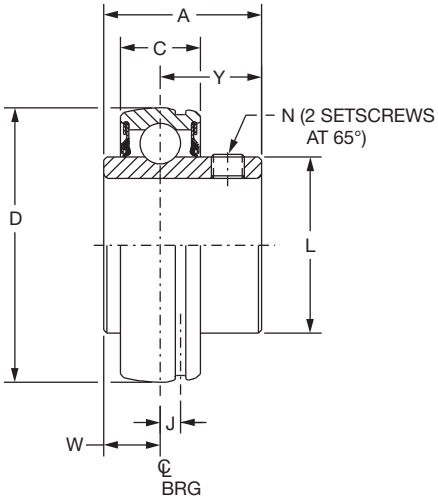

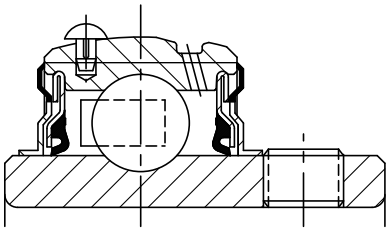

Series	Shaft Size	Standard Insert		High Temp	
		Part No.	Description	Part No.	Description
206	1	**123419**	INS-SCM-100	@	INS-SCM-100-HT
	25mm	***125825***	*INS-SCM-25M*	@	*INS-SCM-25M-HT*
207	1-3/16	**123420**	INS-SCM-103	@	INS-SCM-103-HT
	1-1/4	**123339**	INS-SC-104	**053776**	INS-SC-104-HT
	30mm	***125826***	*INS-SCM-30M*	@	*INS-SCM-30M-HT*
208	1-7/16	**123353**	INS-SCM-107	**049945**	INS-SCM-107-HT
	1-1/2#	**123342**	INS-SC-108	**064149**	INS-SC-108-HT
	35mm	***125828***	*INS-SCM-35M*	@	*INS-SCM-35M-HT*
209	1-1/2	**123354**	INS-SCM-108	**068889**	INS-SCM-108-HT
	1-5/8	**045874**	INS-SC-110L	@	INS-SC-110L-HT
	40mm	***125830***	*INS-SCM-40M*	@	*INS-SCM-40M-HT*
210	1-11/16	**123355**	INS-SCM-111	@	INS-SCM-111-HT
	1-3/4	**123356**	INS-SCM-112	@	INS-SCM-112-HT
	45mm	***125832***	*INS-SCM-45M*	@	*INS-SCM-45M-HT*
211	1-15/16	**123357**	INS-SCM-115	**068404**	INS-SCM-115-HT
	2	**123358**	INS-SCM-200	**058157**	INS-SCM-200-HT
	50mm	***125834***	*INS-SCM-50M*	@	*INS-SCM-50M-HT*
212	2-3/16	**123359**	INS-SCM-203	@	INS-SCM-203-HT
	2-1/4	**123360**	INS-SCM-204	**073634**	INS-SCM-204-HT
	55mm	***125836***	*INS-SCM-55M*	@	*INS-SCM-55M-HT*
214	2-7/16	**123361**	INS-SCM-207	**056912**	INS-SCM-207-HT
	2-1/2	**123362**	INS-SCM-208	**075714**	INS-SCM-208-HT
	60mm	***125838***	*INS-SCM-65M*	@	*INS-SCM-65M-HT*
215	2-11/16	**123363**	INS-SCM-211	@	INS-SCM-211-HT
	70mm	***125840***	*INS-SCM-70M*	@	*INS-SCM-70M-HT*
216	2-15/16	**123364**	INS-SCM-215	**049918**	INS-SCM-215-HT
	3	**123365**	INS-SCM-300	@	INS-SCM-300-HT
	75mm	***125842***	*INS-SCM-75M*	@	*INS-SCM-75M-HT*
218	3-7/16	**123366**	INS-SCM-307	@	INS-SCM-307-HT
	3-1/2	**123367**	INS-SCM-308	@	INS-SCM-308-HT
	85mm	***125844***	*INS-SCM-85M*	***062570***	*INS-SCM-85M-HT*

@ Assembled to order

SCM Piloted Flange Only



Setscrew Ball Bearings
SCM MEDIUM DUTY BEARING INSERTS

Series	Shaft Size	Weight lbs. *kgs.*	A	C	D	J	L	N	W	Y
206	1	0.71	1.52	0.69	2.4409	0.16	1.57	5/16-24	0.58	0.94
	25mm	*0.32*	*38.6*	*17.5*	*62.000*	*4.1*	*39.9*	*M8x1.25*	*14.7*	*23.9*
207	1-3/16	1.07	1.71	0.75	2.8346	0.20	1.84	5/16-24	0.67	1.04
	1-1/4	1.02								
	30mm	*0.53*	*43.4*	*19.1*	*72.000*	*5.1*	*46.7*	*M8x1.25*	*17.0*	*26.4*
208	1-7/16	1.32	1.94	0.87	3.1496	0.22	2.05	5/16-24	0.75	1.19
	1-1/2#	1.27								
	35mm	*0.60*	*49.3*	*22.1*	*80.000*	*5.6*	*52.1*	*M8x1.25*	*19.1*	*30.2*
209	1-1/2	1.62	1.94	0.87	3.3465	0.25	2.22	5/16-24	0.75	1.19
	1-5/8	1.49								
	40mm	*0.71*	*49.3*	*22.1*	*85.000*	*6.4*	*56.4*	*M8x1.25*	*19.1*	*30.2*
210	1-11/16	1.82	1.94	0.87	3.5433	0.25	2.43	3/8-24	0.75	1.19
	1-3/4	1.74								
	45mm	*0.76*	*49.3*	*22.1*	*90.000*	*6.4*	*61.7*	*M10x1.5*	*19.1*	*30.2*
211	1-15/16	2.36	2.22	0.94	3.9370	0.25	2.71	3/8-24	0.87	1.35
	2	2.26								
	50mm	*1.03*	*56.4*	*23.9*	*100.000*	*6.4*	*68.8*	*M10x1.5*	*22.1*	*34.3*
212	2-3/16	2.97	2.31	1.02	4.3307	0.25	2.97	3/8-24	0.90	1.41
	2-1/4	2.85								
	55mm	*1.27*	*58.7*	*25.9*	*110.000*	*6.4*	*75.4*	*M10x1.5*	*22.9*	*35.8*
214	2-7/16	4.39	2.54	1.10	4.9213	0.26	3.31	3/8-24	1.06	1.48
	2-1/2	4.25								
	60mm	*1.86*	*64.5*	*27.9*	*125.000*	*6.6*	*84.1*	*M10x1.5*	*26.9*	*37.6*
215	2-11/16	4.49	2.33	1.14	5.1181	0.28	3.62	3/8-24	0.86	1.47
	70mm	*1.98*	*59.2*	*29.0*	*130.000*	*7.1*	*91.9*	*M10x1.5*	*21.8*	*37.3*
216	2-15/16	5.54	2.38	1.18	5.5118	0.29	3.83	3/8-24	0.88	1.50
	3	5.52								
	75mm	*2.51*	*60.5*	*30.0*	*140.000*	*7.4*	*97.3*	*M10x1.5*	*22.4*	*38.1*
218	3-7/16	7.35	2.56	1.34	6.2992	0.30	4.35	3/8-24	0.96	1.60
	3-1/2	7.33								
	85mm	*3.33*	*65.0*	*34.0*	*160.000*	*7.6*	*110.5*	*M10x1.5*	*24.4*	*40.6*

FEATURES/BENEFITS PAGE B4-3	HOW TO ORDER/NOMENCLATURE PAGE B4-5	SELECTION PAGE B4-6	ACCESSORIES PAGE B4-98

SELECTION/DIMENSIONS

Setscrew Ball Bearings

LF/LFT/SL BEARING INSERTS

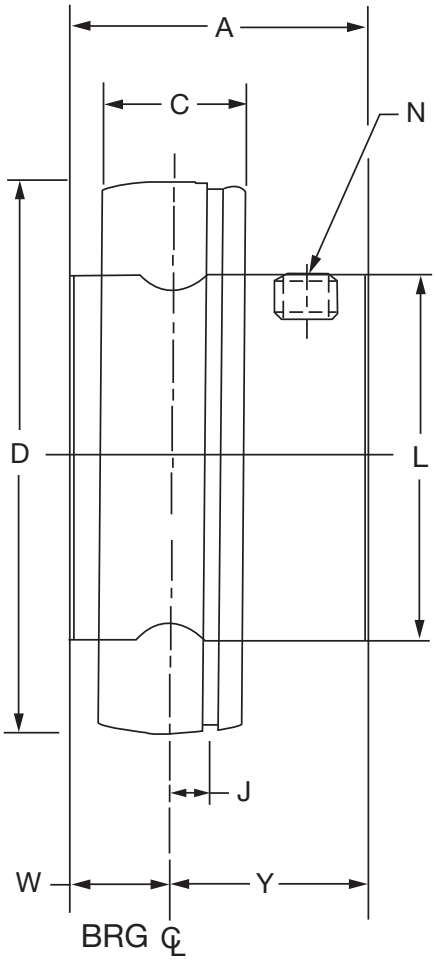

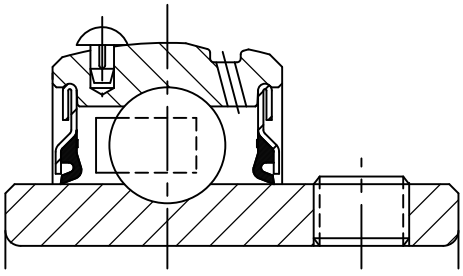

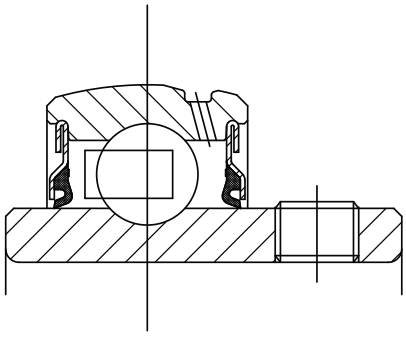



Setscrew Ball Bearings
LF/LFT/SL BEARING INSERTS

Series	Shaft Size	With Pin		Without Pin	
		Part No.	Description	Part No.	Description
203	1/2	**123328**	INS-SC-008	**389923**	INS-SCS-008
	5/8	**123329**	INS-SC-010	**389924**	INS-SCS-010
	17mm	***125800***	*INS-SC-17M*	***125636***	*INS-SCS-17M*
204	3/4	**077976**	INS-SCP-012	**077940**	INS-SCS-012
	20mm	***077993***	*INS-SCP-20M*	***077957***	*INS-SCS-20M*
205	7/8	**077977**	INS-SCP-014	**077941**	INS-SCS-014
	15/16	**077978**	INS-SCP-015	**077942**	INS-SCS-015
	1	**077979**	INS-SCP-100	**077943**	INS-SCS-100
	25mm	***077994***	*INS-SCP-25M*	***077958***	*INS-SCS-25M*
206	1-1/16	**077980**	INS-SCP-101	**077944**	INS-SCS-101
	1-1/8	**077981**	INS-SCP-102	**077945**	INS-SCS-102
	1-3/16	**077982**	INS-SCP-103	**077946**	INS-SCS-103
	1-1/4	**077983**	INS-SCP-104S	**077947**	INS-SCS-104S
	30mm	***077995***	*INS-SCP-30M*	***077959***	*INS-SCS-30M*
207	1-1/4	**077984**	INS-SCP-104	**077948**	INS-SCS-104
	1-5/16	**077921**	INS-SCP-105	**077923**	INS-SCS-105
	1-3/8	**077985**	INS-SCP-106	**077949**	INS-SCS-106
	1-7/16	**077986**	INS-SCP-107	**077950**	INS-SCS-107
	35mm	***077996***	*INS-SCP-35M*	***077960***	*INS-SCS-35M*

Series	Shaft Size	Weight lbs kg	A	C	D	J	L	N	W	Y	Capacity, lbs	
											Static	Dynamic
203	1/2	0.23	1.00	0.51	1.5748	0.15	0.96	10-32	0.36	0.64	1079	2158
	5/8	0.21										
	17mm	*0.10*	*25.4*	*13.0*	*40.000*	*3.80*	*24.4*	*M5x0.8*	*9.10*	*16.3*		
204	3/4	0.25	1.02	0.58	1.8504	0.15	1.12	1/4-28	0.29	0.73	1482	2899
	20mm	*0.11*	*25.9*	*14.7*	*47.000*	*3.80*	*28.4*	*M6x1*	*7.40*	*18.5*		
205	7/8	0.41	1.06	0.59	2.0472	0.16	1.32	1/4-28	0.30	0.76	1769	3146
	15/16	0.38										
	1	0.25										
	25mm	*0.17*	*26.9*	*15.0*	*52.000*	*4.10*	*33.5*	*M6x1*	*7.60*	*19.3*		
206	1-1/16	0.64	1.26	0.69	2.4409	0.16	1.57	5/16-24	0.35	0.91	2538	4368
	1-1/8	0.61										
	1-3/16	0.58										
	1-1/4	0.56										
	30mm	*0.25*	*32.0*	*17.5*	*62.000*	*4.10*	*39.9*	*M8x1.25*	*8.90*	*23.1*		
207	1-1/4	0.92	1.40	0.75	2.8346	0.20	1.84	5/16-24	0.37	1.03	3461	5759
	1-5/16	0.90										
	1-3/8	0.88										
	1-7/16	0.75										
	35mm	*0.38*	*35.6*	*19.1*	*72.000*	*5.10*	*46.7*	*M8x1.25*	*9.40*	*26.2*		

FEATURES/BENEFITS PAGE B4-3 | HOW TO ORDER/NOMENCLATURE PAGE B4-5 | SELECTION PAGE B4-6 | ACCESSORIES PAGE B4-98

ACCESSORIES



Setscrew Ball Bearings

LUBRICANTS

DODGE ball bearings are factory lubricated with a lithium complex base lubricant. For applications where extreme ambient temperatures or speeds are anticipated or environmental considerations require a different lubricant, DODGE has a wide variety of lubricants available. Special lubricant options usually require set-up charges and premiums.

SEALS

The PROGUARD PLUS seal is a highly effective positive contact, land riding seal with flingers pressed on to each side of the inner ring offering added protection from wash down or extreme contamination. For high speeds or where seal drag would be an impediment, an all metallic labyrinth seal is available.

HIGH TEMPERATURE

DODGE high temperature bearings are designed to operate in temperatures from 225˚F (108˚C) to 400˚F (205˚C). The bearings have adjusted internal clearances, metallic labyrinth seals, high temperature retainers, heat stabilized outer rings, and lubricants to meet the temperature needs of the application. To insure proper replacement, the bearing is identified by a six digit part number etched on a stainless steel nameplate riveted to the housing. The part number identifies the specific feature of the bearing. High temperature bearings are factory assembled to order and are available at extra cost. Consult Dodge Engineering for application assistance at (864)284-5700 or fax (864) 281-2317.

AIR HANDLING

Industrial fans and blowers generally operate at high speeds with bearing requirements of long life and quiet operation. Dodge stocks SC, and SCM Air Handling Pillow Blocks and flange bearings that are specifically designed to meet the requirements of the air handling industry. These bearings are 100% noise tested, and have an air handling fit for long life and quiet operation. These bearings are recommended for fan and blower applications. Sizes and housing configurations not listed can be supplied on a made to order basis.

HOUSING MATERIAL

For extra corrosion resistance, a variety of housing finishes are available. Special materials include stainless steel or polymer housing, as an option. These coatings conform to U.S.D.A. and F.D.A. requirements. SC and SCM inserts can be supplied with a corrosion resistant coating on the inner and outer rings, stainless steel balls and set-screws, and nickel plated flingers as well as F.D.A. lubricant.

OTHER MODIFICATIONS

For applications requiring modifications not listed, we encourage you to contact our Customer Order Engineering Department at (864)284-5700 or fax (864)281-2317.

DODGE®



Setscrew Ball Bearings
HIGH TEMPERATURE SC & SCM BALL BEARINGS

Series	Shaft Size	Pillow Blocks		2 Bolt Flanges		4 Bolt Flanges	
		Part No.	Description	Part No.	Description	Part No.	Description
204	1/2	@	P2B-SC-008L-HT	054843	F2B-SC-008L-HT	@	F4B-SC-008L-HT
	5/8	@	P2B-SC-010L-HT	057474	F2B-SC-010L-HT	067710	F4B-SC-010L-HT
	3/4	053670	P2B-SC-012-HT	052618	F2B-SC-012-HT	058263	F4B-SC-012-HT
	20mm	*@*	*P2B-SC-20M-HT*	*074828*	*F2B-SC-20M-HT*	*@*	*F4B-SC-20M-HT*
205	7/8	@	P2B-SC-014-HT	051906	F2B-SC-014-HT	@	F4B-SC-014-HT
	15/16	068088	P2B-SC-015-HT	056864	F2B-SC-015-HT	054190	F4B-SC-015-HT
	1	051513	P2B-SC-100-HT	052294	F2B-SC-100-HT	052015	F4B-SC-100-HT
	25mm	*@*	*P2B-SC-25M-HT*	*059821*	*F2B-SC-25M-HT*	*@*	*F4B-SC-25M-HT*
206	1	054782	P2B-SCM-100-HT	064880	F2B-SCM-100-HT	074530	F4B-SCM-100-HT
	1-1/8	@	P2B-SC-102-HT	062877	F2B-SC-102-HT	068290	F4B-SC-102-HT
	1-3/16	053169	P2B-SC-103-HT	052604	F2B-SC-103-HT	054419	F4B-SC-103-HT
	1-1/4	062829	P2B-SC-104S-HT	@	F2B-SC-104S-HT	049462	F4B-SC-104S-HT
	30mm	*@*	*P2B-SC-30M-HT*	*@*	*F2B-SC-30M-HT*	*054534*	*F4B-SC-30M-HT*
206 (SCU)	1-1/8	@	P2B-SCU-102-HT	- - - - - -	- - - - - -	- - - - - -	- - - - - -
	1-3/16	059737	P2B-SCU-103-HT	- - - - - -	- - - - - -	- - - - - -	- - - - - -
	1-1/4	057847	P2B-SCU-104S-HT	- - - - - -	- - - - - -	- - - - - -	- - - - - -
	30mm	*@*	*P2B-SCU-30M-HT*	- - - - - -	- - - - - -	- - - - - -	- - - - - -
207	1-3/16	054314	P2B-SCM-103-HT	@	F2B-SCM-103-HT	074223	F4B-SCM-103-HT
	30mm	@	P2B-SCM-30M-HT	059673	F2B-SCM-30M-HT	@	F4B-SCM-30M-HT
	1-1/4	058262	P2B-SC-104-HT	052311	F2B-SC-104-HT	051826	F4B-SC-104-HT
	1-3/8	@	P2B-SC-106-HT	@	F2B-SC-106-HT	068185	F4B-SC-106-HT
	1-7/16	050189	P2B-SC-107-HT	054300	F2B-SC-107-HT	052540	F4B-SC-107-HT
	1-7/16	052531	P2B-SCB-107-HT	- - - - - -	- - - - - -	- - - - - -	- - - - - -
	35mm	*@*	*P2B-SC-35M-HT*	*@*	*F2B-SC-35M-HT*	*s*	*F4B-SC-35M-HT*
208	1-7/16	054276	P2B-SCM-107-HT	@	F2B-SCM-107-HT	054342	F4B-SCM-107-HT
	1-1/2	057338	P2B-SC-108-HT	054203	F2B-SC-108-HT	051827	F4B-SC-108-HT
	1-5/8	@	P2B-SC-110-HT	@	F2B-SC-110-HT	058194	F4B-SC-110-HT
	40mm	*062572*	*P2B-SC-40M-HT*	*@*	*F2B-SC-40M-HT*	*@*	*F4B-SC-40M-HT*

@ Assembled to order.

RELATED PRODUCTS



Setscrew Ball Bearings

HIGH TEMPERATURE SC & SCM BALL BEARINGS

Series	Shaft Size	Pillow Blocks		2 Bolt Flanges		4 Bolt Flanges	
		Part No.	Description	Part No.	Description	Part No.	Description
209	1-1/2	**058380**	P2B-SCM-108-HT	**054203**	F2B-SCM-108-HT	**064557**	F4B-SCM-108-HT
	1-5/8	**@**	P2B-SC-110L-HT	**@**	F2B-SC-110L-HT	**@**	F4B-SC-110L-HT
	1-11/16	**053563**	P2B-SC-111-HT	**@**	F2B-SC-111-HT	**057212**	F4B-SC-111-HT
	1-11/16	**058619**	P2B-SCB-111-HT	**- - - - - -**	- - - - - -	**- - - - - -**	- - - - - -
	1-3/4	**062676**	P2B-SC-112-HT	**062157**	F2B-SC-112-HT	**051825**	F4B-SC-112-HT
	45mm	***@***	*P2B-SC-45M-HT*	***@***	*F2B-SC-45M-HT*	***@***	*F4B-SC-45M-HT*
210	1-11/16	**054315**	P2B-SCM-111-HT	**@**	F2B-SCM-111-HT	**054593**	F4B-SCM-111-HT
	1-3/4	**@**	P2B-SCM-112-HT	**057114**	F2B-SCM-112-HT	**057368**	F4B-SCM-112-HT
	1-15/16	**052047**	P2B-SC-115-HT	**073280**	F2B-SC-115-HT	**052048**	F4B-SC-115-HT
	1-15/16	**052532**	P2B-SCB-115-HT	**- - - - - -**	- - - - - -	**- - - - - -**	- - - - - -
	2	**058183**	P2B-SC-200-HT	**062309**	F2B-SC-200-HT	**057132**	F4B-SC-200-HT
	50mm	***@***	*P2B-SC-50M-HT*	***062779***	*F2B-SC-50M-HT*	***068066***	*F4B-SC-50M-HT*
211	1-15/16	**052276**	P2B-SCM-115-HT	**@**	F2B-SCM-115-HT	**057363**	F4B-SCM-115-HT
	2	**054934**	P2B-SCM-200-HT	**@**	F2B-SCM-200-HT	**054065**	F4B-SCM-200-HT
	2-3/16	**053955**	P2B-SC-203-HT	**059954**	F2B-SC-203-HT	**058852**	F4B-SC-203-HT
	2-1/4	**073065**	P2B-SC-204-HT	**@**	F2B-SC-204-HT	**054918**	F4B-SC-204-HT
	55mm	***@***	*P2B-SC-55M-HT*	***076558***	*F2B-SC-55M-HT*	***049894***	*F4B-SC-55M-HT*
212	2-3/16	**054412**	P2B-SCM-203-HT	**@**	F2B-SCM-203-HT	**073772**	F4B-SCM-203-HT
	2-1/4	**068266**	P2B-SCM-204-HT	**@**	F2B-SCM-204-HT	**067830**	F4B-SCM-204-HT
	2-7/16	**059614**	P2B-SC-207-HT	**@**	F2B-SC-207-HT	**057487**	F4B-SC-207-HT
	60mm	***057800***	P2B-SC-60M-HT	***057800***	F2B-SC-60M-HT	***057801***	F4B-SC-60M-HT
214	2-7/16	**054316**	P2B-SCM-207-HT	**- - - - - -**	- - - - - -	**054917**	F4B-SCM-207-HT
	2-1/2	**073006**	P2B-SCM-208-HT	**- - - - - -**	- - - - - -	**056630**	F4B-SCM-208-HT
	2-11/16	**067774**	P2B-SC-211-HT	**- - - - - -**	- - - - - -	**065700**	F4B-SC-211-HT
	70mm	***@***	*P2B-SC-70M-HT*	- - - - - -	- - - - - -	***@***	*F4B-SC-70M-HT*
215	2-15/16	**056588**	P2B-SC-215-HT	**- - - - - -**	- - - - - -	**052550**	F4B-SC-215-HT
	75mm	***@***	*P2B-SC-75M-HT*	- - - - - -	- - - - - -	***074237***	*F4B-SC-75M-HT*
216	2-15/16	**054556**	P2B-SCM-215-HT	**- - - - - -**	- - - - - -	**052478**	F4B-SCM-215-HT
	3	**@**	P2B-SCM-300-HT	**- - - - - -**	- - - - - -	**059696**	F4B-SCM-300-HT
	75mm	***@***	P2B-SCM-75M-HT	**- - - - - -**	- - - - - -	***062182***	F4B-SCM-75M-HT
218	3-7/16	**049991**	P2B-SCM-307-HT	**- - - - - -**	- - - - - -	**057708**	F4B-SCM-307-HT
	3-1/2	***@***	*P2B-SCM-308-HT*	- - - - - -	- - - - - -	***058633***	*F4B-SCM-308-HT*

@ Assembled to order.

DODGE®



Setscrew Ball Bearings
HIGH TEMPERATURE SC & SCM BALL BEARINGS

Series	Shaft Size	Tapped Base Pillow Blocks		Flanged Bracket	
		Part Number	Description	Part Number	Description
204	3/4	**059636**	TB-SC-012-HT	**@**	FB-SC-012-HT
205	1	**057906**	TB-SC-100-HT	**@**	FB-SC-100-HT
207	1-1/4	**@**	TB-SC-104-HT	**056578**	FB-SC-104-HT
211	2-3/16	**050555**	TB-SC-203-HT		

Series	Shaft Size	Non Expansion Pillow Blocks		Expansion Pillow Blocks	
		Part Number	Description	Part Number	Description
206	1-3/16	**- - - - - -**	- - - - - - - - -	**054063**	P2B-SCH-103-EHT
207	1-7/16	**053894**	P2B-SCH-107-HT	**053895**	P2B-SCH-107-EHT

Series	Shaft Size	Piloted Flanges	
		Part Number	Description
206	1	**058652**	FC-SCM-100-HT
208	1-1/2	**053871**	FC-SC-108-HT
	1-1/2	**057683**	FC-SCM-108-HT
211	1-15/16	**058915**	FC-SCM-115-HT
	2-1/4	**058233**	FC-SC-204-HT
212	2-7/16	**058738**	FC-SC-207-HT
	55mm	***054837***	*FC-SCM-55M-HT*
216	2-15/16	**054831**	FC-SCM-215-HT
	3	**056911**	FC-SCM-300-HT
218	3-7/16	**068239**	FC-SCM-307-HT

Series	Shaft Size	Wide Slot Take-up		Narrow Slot Take-up	
		Part Number	Description	Part Number	Description
210	1-15/16	**057265**	WSTU-SC-115-HT	**054580**	NSTU-SC-115-HT
211	*55mm*	***049893***	*WSTU-SC-55M-HT*	**@**	*NSTU-SC-55M-HT*
	1-15/16	**049891**	WSTU-SCM-115-HT	**@**	NSTU-SCM-115-HT
212	2-7/16	**057839**	WSTU-SC-207-HT	**064237**	NSTU-SC-207-HT
214	2-7/16	**049811**	WSTU-SCM-207-HT	**@**	- - - - - - -
215	2-15/16	**059844**	WSTU-SC-215-HT	**@**	- - - - - - -

@ Assembl to order.

RELATED PRODUCTS

DODGE Ball Bearing End Covers*



- Fits all styles of DODGE cast iron housed ball bearings.: Pillow Blocks, 2 and 4 Bolt Flanges, and Take-Up bearings
- Injected molded, impact resistant, OSHA safety yellow end covers meet requirements for exposed rotating shaft
- Stainless steel “C” washer for gripping power
- No modification or machining of existing housings required
- Concentric knockout grooves on inside of end cover for thru-shaft
- DODGE six digit part number and description embossed inside
- Operating temperature to 250° F
- For non relubricable/sealed for life applications (-NL), part number **430020** hex head plug is available

Nomenclature

EC - 205 - P

- **P**: “Blank” fits all housing styles as noted; P = Pillow Blocks, including tapped base; X = All other housing styles as noted
- **205**: IOS & ABMA ring size
- **EC**: End Cover

Series	Pillow Blocks Std, U, B	Tapped Base PB	2 Bolt Flange	Flanged Bracket	4 Bolt Flange	Piloted Flange (FC)	Narrow Slot Take-Up	Wide Slot Take-Up
203	X		X		X			
204	X	X	X	X	X		X	X
205	X	X	X	X	X		X	X
206	X	X	X	X	X	@	X	X
207	X	X	X	X	X	@	X	X
208	X	X	X		X	@	X	X
209	X	X	X		X	@	X	X
210	X	X	X	X	X	@	X	X
211	X	X	X		X	NA	X	X
212	X		X		X	NA	X	X
214	X				X	NA		X
215	X				X			X
216	X				X	X		X
218	X				X	X		

* = Will not fit LF, LFT, SCHB, HNGR & CYL
@ = Some modification required
NA = Will not fit
X = Will fit



Snap On End Covers *
END CLOSURES

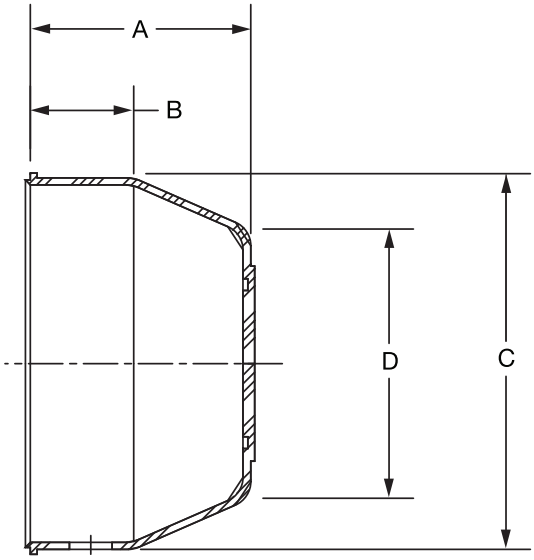

Series	Closed End Closure	
	Part Number	Description
204	**128280**	EC-204-Y
205	**128281**	EC-205-Y
206	**128282**	EC-206-Y
207	**128283**	EC-207-Y
208	**128284**	EC-208-Y
209	**128285**	EC-209-Y
210	**128286**	EC-210-Y
211	**128277**	EC-211-Y
212	**128278**	EC-212-Y

Open End Closure		
Shaft Size	Part Number	Description
3/4	**128350**	ECO-012-Y
20mm	**128363**	ECO-20M-Y
1	**128351**	ECO-100-Y
25mm	**128364**	ECO-25M-Y
1-3/16	**128352**	ECO-103-Y
1-1/4	**128353**	ECO-104S-Y
30mm	**128365**	ECO-30M-Y
1-1/4	**128355**	ECO-104-Y
1-7/16	**128354**	ECO-107-Y
35mm	**128366**	ECO-35M-Y
1-1/2	**128356**	ECO-108-Y
40mm	**128367**	ECO-40M-Y
1-11/16	**128357**	ECO-111-Y
45mm	**128368**	ECO-45M-Y
1-15/16	**128358**	ECO-115-Y
50mm	**128369**	ECO-50M-Y

* All P2B, F2B, F4B: 204 Series Through 212 Series Closed
204 Series Through 210 Series Open

* Will not fit LF, LFT, CYL, HNG, SCHB

RELATED PRODUCTS



Open Cover Dimensions

Series	Shaft Size	A	B	C	D	E
204	3/4	1-3/16	17/32	1-29/32	1-3/8	3/16
	20mm	*30.2*	*13.5*	*48.4*	*35.1*	*4.9*
205	1	1-1/4	17/32	2-11/64	1-39/64	3/16
	25mm	*31.8*	*13.5*	*55.1*	*40.9*	*4.9*
206	1-3/16	1-25/64	9/16	2-1/2	31/32	3/16
	1-1/4					
	30mm	*35.3*	*14.2*	*63.5*	*50.0*	*4.9*
207	1-1/4	1-17/32	11/16	2-29/32	2-5/16	3/16
	1-7/16					
	35mm	*38.9*	*17.5*	*73.9*	*58.9*	*4.9*
208	1-1/2	1-19/32	11/16	3-5/16	2-49/64	13/64
	40mm	*40.6*	*17.5*	*84.1*	*70.1*	*5.1*
209	1-11/16	1-21/32	23/32	3-1/2	2-7/8	13/64
	45mm	*41.9*	*18.3*	*88.9*	*72.9*	*5.1*
210	1-15/16	1-23/32	29/32	3-5/8	3	13/64
	50mm	*43.7*	*23.1*	*91.4*	*76.2*	*5.1*



Closed Cover Dimensions

Series	A	B	C	D
204	1-1/8 28.7	17/32 13.5	1-29/32 48.4	1-3/8 35.1
205	3/16 30.2	17/32 13.5	2-11/64 55.1	1-39/64 40.9
206	1-21/64 33.8	9/16 14.2	2-1/2 63.5	31/32 50.0
207	1-15/32 37.3	11/16 17.5	2-29/32 73.9	2-5/16 58.9
208	1-35/64 39.1	11/16 17.5	3-5/16 84.1	2-49/64 70.1
209	1-19/32 40.4	23/32 18.3	3-1/2 88.9	2-7/8 72.9
210	1-21/32 42.2	29/32 23.1	3-5/8 91.4	3 76.2
211	1-51/64 45.5	31/32 24.6	3-15/16 100.1	3-19/64 83.6
212	1-29/32 48.3	1 25.4	4-3/8 111.3	3-21/32 92.7

RELATED PRODUCTS

DODGE Ball Bearing End Covers*

BALL BEARING END COVERS FOR PILLOW BLOCKS & TAPPED BASE UNITS

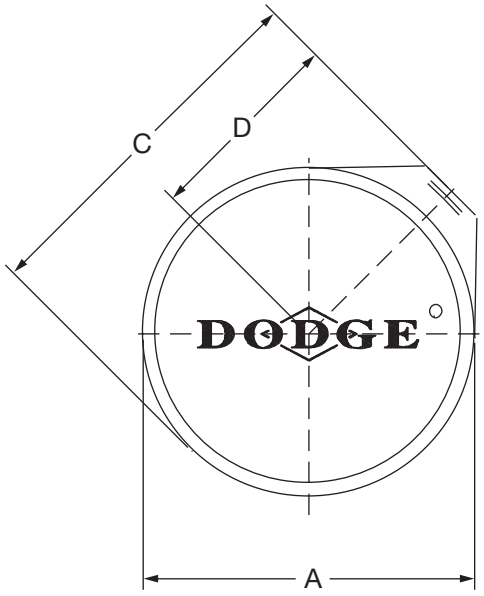

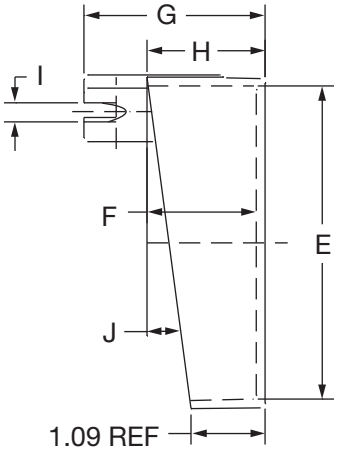

Series	Shaft Size*		Part Number	Description
	SC, VSC, DL, XR, SXV	SCM, DLM, SCH, SXRH, DLH		
203	1/2 & 5/8 *17mm*	- - - - -	**128200**	EC-203-P
204	1/2 - 3/4 *20mm*	- - - - -	**128202**	EC-204-P
205	7/8 - 1 *25mm*	- - - - -	**128204**	EC-205-P
206	1-1/16 - 1-1/4 *30mm*	1 *25mm*	**128206**	EC-206-P
207	1-1/4 - 1-7/16 *35mm*	1-3/16 & 1-1/4 *30mm*	**128208**	EC-207-P
208	1-1/2 - 1-5/8 *40mm*	1-7/16 *35mm*	**128210**	EC-208-P
209	1-5/8 - 1-3/4 *45mm*	1-1/2 *40mm*	**128212**	EC-209-P
210	1-15/16 & 2 *50mm*	1-11/16 & 1-3/4 *45mm*	**128214**	EC-210-P
211	2 - 2-1/4 *55mm*	1-15/16 & 2 *50mm*	**128216**	EC-211-P
212	2-1/4 - 2-7/16 *60mm*	2-3/16 - 2-1/4 *55mm*	**128218**	EC-212-P

*__NOTE:__ SCH, SXRH, and DLH use the next larger end cover. E.g. A P2B-DLH-103 would use a EC-207-P.

For no re-lube (_NL) applications, part number 430030, hex head plus is available



DODGE Ball Bearing End Covers*

BALL BEARING END COVERS FOR PILLOW BLOCKS & TAPPED BASE UNITS

Series	Shaft Size*		A	B	C	D	E	F	G	H	I	J
	SC, VSC, DL, SXR, SXV	SCM, DLM, SCH, SXRH, DLH										
203	1/2 & 5/8 *17mm*	- - - - -	1-25/32 *45.2*	1-43/64 *42.4*	2-7/64 *53.6*	1-3/32 *27.7*	1-41/64 *41.7*	49/64 *19.56*	1-29/64 *37.1*	29/32 *22.9*	1/4 *6.4*	9º
204	1/2 - 3/4 *20mm*	- - - - -	2-3/64 *52.0*	1-27/32 *46.7*	2-37/64 *65.3*	1-19/64 *33.0*	1-55/64 *47.2*	1-1/64 *25.65*	1-49/64 *45.0*	1-5/32 *29.5*	5/16 *7.9*	11º
205	7/8 - 1 *25mm*	- - - - -	2-3/8 *60.2*	2-3/16 *55.6*	2-13/16 *71.4*	1-3/16 *35.0*	2-5/32 *54.9*	1-1/16 *26.92*	1-7/8 *47.8*	1-7/32 *31.0*	11/32 *8.6*	9º
206	1-1/16 - 1-1/4 *30mm*	1 *25mm*	2-47/64 *69.3*	2-17/32 *64.3*	3-21/64 *84.3*	1-45/64 *43.2*	2-1/2 *63.5*	1-15/64 *31.5*	2-5/32 *54.9*	1-13/32 *35.6*	23/64 *8.9*	9º
207	1-1/4 - 1-7/16 *35mm*	1-3/16 & 1-1/4 *30mm*	3-1/4 *82.6*	3 *76.20*	3-51/64 *96.3*	1-29/32 *48.5*	3-1/64 *76.7*	1-5/16 *33.27*	2-11/32 *59.4*	1-31/64 *37.6*	3/8 *9.4*	7º 3'
208	1-1/2 - 1-5/8 *40mm*	1-7/16 *35mm*	3-3/8 *85.9*	3-1/8 *79.5*	4 *101.60*	2-1/16 *52.3*	3-7/64 *79.0*	1-19/64 *33.02*	2-13/32 *61.0*	1-1/2 *38.1*	27/64 *10.7*	6º
209	1-5/8 - 1-3/4 *45mm*	1-1/2 *40mm*	3-11/16 *93.7*	3-15/32 *88.1*	4-17/64 *108.2*	2-11/64 *55.1*	3-13/32 *86.6*	1-21/64 *33.78*	2-21/64 *59.2*	1-17/32 *38.9*	25/64 *9.9*	7º
210	1-15/16 & 2 *50mm*	1-11/16 & 1-3/4 *45mm*	3-7/8 *98.6*	3-37/64 *90.9*	4-1/2 *114.3*	2-19/32 *59.2*	3-37/64 *90.9*	1-23/64 *34.29*	2-1/2 *63.5*	1-9/16 *39.6*	31/64 *12.5*	9º
211	2 - 2-1/4 *55mm*	1-15/16 & 2 *50mm*	4-27/64 *12.3*	4 *101.60*	5-1/16 *128.5*	2-19/32 *66.0*	4-1/8 *104.7*	1-13/32 *35.81*	2-37/64 *65.3*	1-5/8 *41.2*	29/64 *11.4*	7º
212	2-1/4 - 2-7/16 *60mm*	2-3/16 - 2-1/4 *55mm*	4-59/64 *125.0*	4-15/32 *113.3*	5-29/64 *138.7*	2-3/4 *69.9*	4-39/64 *117.1*	1-17/32 *38.86*	2-11/16 *68.3*	1-3/4 *44.5*	13/32 *10.4*	8º

FEATURES/BENEFITS PAGE B4-3	HOW TO ORDER/NOMENCLATURE PAGE B4-5	SELECTION PAGE B4-6	ACCESSORIES PAGE B4-98

RELATED PRODUCTS

DODGE Ball Bearing End Covers*

BALL BEARING END COVERS FOR MOUNTED UNITS OTHER THAN PILLOW BLOCKS & TAPPED BASE UNITS

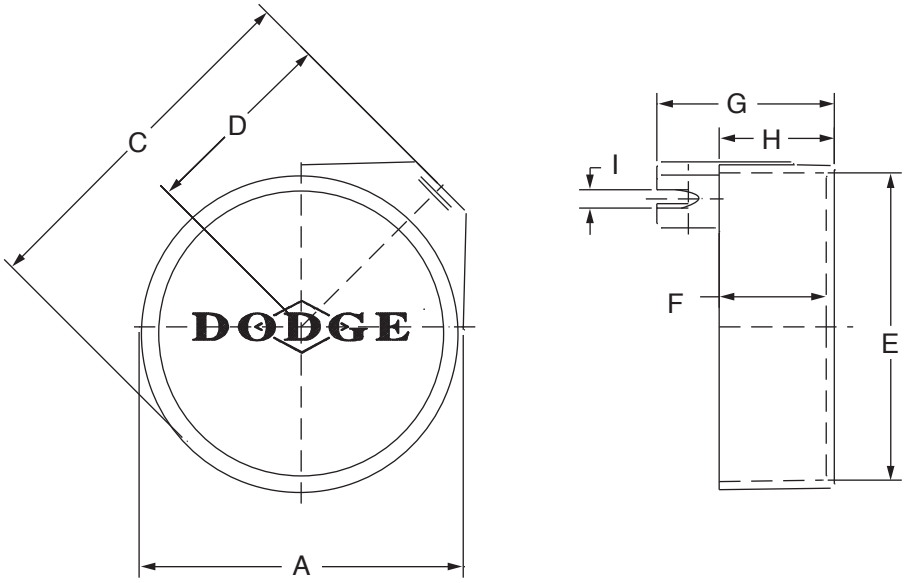

Series	Shaft Size*		Part Number	Description
	SC, VSC, DL,SXR, SXV	SCM & DLM		
203	1/2 & 5/8 *17mm*	- - - - - - - - - -	**128201**	EC-203-X
204	1/2 - 3/4 *20mm*	- - - - - - - - - -	**128203**	EC-204-X
205	7/8 - 1 *25mm*	- - - - - - - - - -	**128205**	EC-205-X
206	1-1/16 - 1-1/4 *30mm*	1 *25mm*	**128207**	EC-206-X
207	1-1/4 - 1-7/16 *35mm*	1-3/16 & 1-1/4 *30mm*	**128209**	EC-207-X
208	1-1/2 - 1-5/8 *40mm*	1-7/1 *35mm*	**128211**	EC-208-X
209	1-5/8 - 1-3/4 *45mm*	1-1/2 *40mm*	**128213**	EC-209-X
210	1-15/16 & 2 *50mm*	1-11/16 & 1-3/4 *45mm*	**128215**	EC-210-X
211	2 - 2-1/4 *55mm*	1-15/16 & 2 *50mm*	**128217**	EC-211-X
212	2-1/4 - 2-7/16 *60mm*	2-3/16 - 2-1/4 *55mm*	**128219**	EC-212-X

***NOTE:** Above end covers will not fit the LF and LFT bearings

For no re-lube (_NL) applications, part number 430030, hex head plus is available

DODGE®



DODGE Ball Bearing End Covers*

BALL BEARING END COVERS FOR MOUNTED UNITS OTHER THAN PILLOW BLOCKS & TAPPED BASE UNITS

Series	Shaft Size*		Weight lbs gm	A	B	C	D	E	F	G	H	I
	SC, VSC, DL,SXR, SXV	SCM & DLM										
203	1/2 & 5/8	- - - - -	0.02	1-51/64	1-43/64	2-13/64	1-3/16	1-41/64	51/64	1-29/64	15/16	1/4
	17mm	- - - - -	*1*	*45.5*	*42.4*	*56.1*	*30.2*	*41.7*	*20.3*	*37.1*	*23.9*	*6.4*
204	1/2 - 3/4	- - - - -	0.03	2-7/32	2	2-47/64	1-25/64	2-1/32	1-1/64	1-13/16	1-5/32	5/16
	20mm	- - - - -	*15*	*56.1*	*50.8*	*69.6*	*35.3*	*51.6*	*25.7*	*45.7*	*29.5*	*7.9*
205	7/8 - 1	- - - - -	0.05	2-3/8	2-3/16	3-3/64	1-19/32	2-5/32	1-1/64	1-53/64	1-11/64	11/32
	25mm	- - - - -	*24*	*60.2*	*55.6*	*77.2*	*40.6*	*54.9*	*25.7*	*46.5*	*29.7*	*8.7*
206	1-1/16 - 1-1/4	1	0.08	2-47/64	2-17/32	3-21/64	1-45/64	2-1/2	1-3/16	2-1/16	1-23/64	23/64
	30mm	*25mm*	*36*	*69.3*	*64.3*	*84.3*	*43.2*	*63.5*	*30.2*	*52.3*	*34.5*	*8.9*
207	1-1/4 - 1-7/16	1-3/16 & 1-1/4	0.12	3-1/4	3	3-27/32	1-31/32	3-1/64	1-11/32	2-11/32	1-17/32	3/8
	35mm	*30mm*	*53*	*82.6*	*76.2*	*97.5*	*50.0*	*76.7*	*34.5*	*59.4*	*38.9*	*9.4*
208	1-1/2 - 1-5/8	1-7/16	0.14	3-3/8	3-1/8	4	2-1/16	3-7/64	1-19/64	2-13/32	1-1/2	27/64
	40mm	*35mm*	*64*	*85.9*	*79.5*	*101.60*	*52.3*	*79.0*	*33.0*	*61.0*	*38.1*	*10.7*
209	1-5/8 - 1-3/4	1-1/2	0.16	3-11/16	3-15/32	4-17/64	2-11/64	3-13/32	1-23/64	2-21/64	1-17/32	25/64
	45mm	*40mm*	*73*	*93.7*	*88.1*	*108.2*	*55.1*	*86.6*	*34.3*	*59.2*	*38.9*	*9.9*
210	1-15/16 & 2	1-11/16 & 1-3/4	0.18	3-7/8	3-37/64	4-1/2	2-21/64	3-9/16	1-23/64	2-33/64	1-9/16	31/64
	50mm	*45mm*	*82*	*98.6*	*90.9*	*114.3*	*59.2*	*90.9*	*34.3*	*63.8*	*39.6*	*12.4*
211	2 - 2-1/4	1-15/16 & 2	0.24	4-27/64	4	5-1/16	2-19/32	4-1/8	1-29/64	2-37/64	1-21/32	29/64
	55mm	*50mm*	*108*	*112.3*	*101.6*	*128.5*	*66.0*	*104.7*	*36.8*	*65.3*	*42.2*	*11.4*
212	2-1/4 - 2-7/16	2-3/16 - 2-1/4	0.27	4-59/64	4-15/32	5-15/32	2-3/4	4-39/64	1-35/64	2-11/16	1-3/4	13/32
	60mm	*55mm*	*124*	*125*	*113.3*	*138.7*	*69.9*	*117.1*	*39.1*	*68.3*	*44.5*	*10.4*

RELATED PRODUCTS

DODGE Ball Bearing End Covers*

BALL BEARING END COVERS FOR MOUNTED UNITS 214 SERIES & LARGER

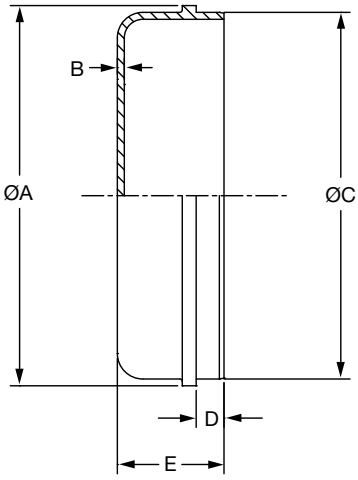

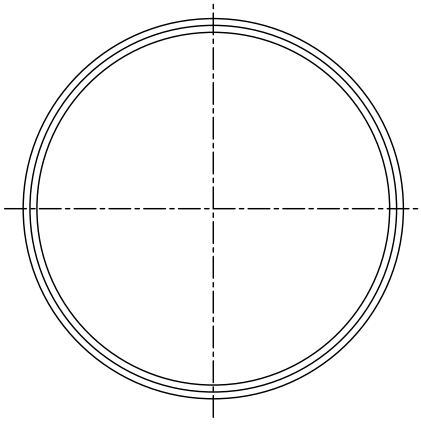

Series	Shaft Size		Part Number	Description
	SC, VSC, DL, SXR, SXV, SCH-E,SXRH-E, DLH-E	SC, VSC, DL, SCM & DLM		
214	2-1/2 & 2-11/16 *70mm*	2-7/16 & 2-1/2 *65mm*	**480037**	EC-080
215	2-15/16 *75mm*	2-11/16 *70mm*	**480455**	EC-090
216	- - - - - - - - - -	2-15/16 & 3 *75mm*	**480456**	EC-100
218	- - - - - - - - - -	3-7/16 & 3-1/2 *85mm*	**480457**	EC-110

Series	Shaft Size		Weight lbs gm	A	B	C	D	E
	SC, VSC, DL, SXR, SXV, SCHSXRH, DLH	SC, VSC, DL, SCM & DLM						
214	2-1/2 & 2-11/16 *70mm*	2-7/16 & 2-1/2 *65mm*	0.33 *151*	4-15/16 *125.4*	3/32 *2.4*	4.741/4.737 *120.4/120.3*	3/16 *4.8*	1-13/32 *35.7*
215	2-15/16 *75mm*	2-11/16 *70mm*	0.36 *164*	5-1/8 *130.2*	3/32 *2.4*	4.944/4.940 *125.6/125.5*	3/8 *9.5*	1-7/16 *36.5*
216	- - - - - - - - - -	2-15/16 & 3 *75mm*	0.44 *201.00*	5-9/16 *141.3*	3/32 *2.4*	5.350/5.346 *135.9/135.8*	9/32 *7.1*	1-7/16 *36.5*
218	- - - - - - - - - -	3-7/16 & 3-1/2 *85mm*	0.57 *257*	6-5/16 *160.3*	3/32 *2.4*	6.100/6.096 *154.9/154.8*	3/8 *9.5*	1-9/16 *39.7*

NOTE: WILL NOT WORK WITH PILLOW-BLOCK HOUSINGS

CONTENTS

GRIP TIGHT® Ball Bearings

Features / Benefits B5-2
How to Order / Nomenclature B5-4
Selection B5-5
Selection/Dimensions
- GRIP TIGHT Pillow Blocks
  - GT Normal Duty B5-8
  - GTAH Air Handling B5-12
  - GTB Normal Duty B5-16
  - GTH-E Expansion B5-18
  - GTM Medium Duty B5-20
  - GTMAH Air Handling B5-22
  - GT Tapped Base B5-24
- GRIP TIGHT 2-Bolt Flanges
  - GT Normal Duty B5-26
  - GTAH Air Handling B5-28
  - GTM Medium Duty B5-30
  - GT LFT Normal Duty B5-32
  - GT Normal Duty Flanged Bracketed B5-33
- GRIP TIGHT 3-Bolt Flanges
  - GT LF Normal Duty B5-34
- GRIP TIGHT 4-Bolt Flanges
  - GT Normal Duty B5-35
  - GTAH Air Handling B5-38
  - GTM Medium Duty B5-42
  - GTMAH Air Handling B5-44
- GRIP TIGHT Piloted Flanges (Flanged Cartridge)
  - GT Normal Duty B5-46
  - GTM Medium Duty B5-48
- GRIP TIGHT Take-Up Bearings
  - GT Normal Duty Narrow Slot B5-50
  - GTM Medium Duty Narrow Slot B5-52
  - GT Normal Duty Wide Slot B5-54
  - GTM Medium Duty Wide Slot B5-58
  - GT Normal Duty Top Angle B5-60
  - GTM Medium Duty Top Angle B5-61
- GRIP TIGHT Inserts
  - GT Normal Duty B5-62
  - GTM Medium Duty B5-66

Related Products B5-70
Part Number Index INDEX-1
Key Word Index INDEX-69

FEATURES/BENEFITS

GRIP TIGHT® Adapter Ball Bearings

DODGE proudly offers a ball bearing with a name that says it all: GRIP TIGHT.

With its patented pull/push adapter system, fully concentric 360º inner ring, and completely interchangeable housing design, the DODGE GRIP TIGHT adapter ball bearing is the easy-on/easy-off solution for damage-free shafting, reduced vibration, and greater cost/inventory savings.

The GRIP TIGHT adapter ball bearing is shaft-ready right out of the box and offered in a variety of housing styles for normal and medium duty operations. It accommodates commercial grade and some undersize shafting to lower costs, and all GRIP TIGHT adapter assemblies fit into a standard DODGE ball bearing housing.

Plus this DODGE bearing has been specifically engineered to run at higher speeds and operate cooler for longer grease life.

In test comparisons, the GRIP TIGHT adapter ball bearing even proved it could suppress fretting corrosion and scarring to shafts and journals, thus saving not only time but added labor/maintenance costs.

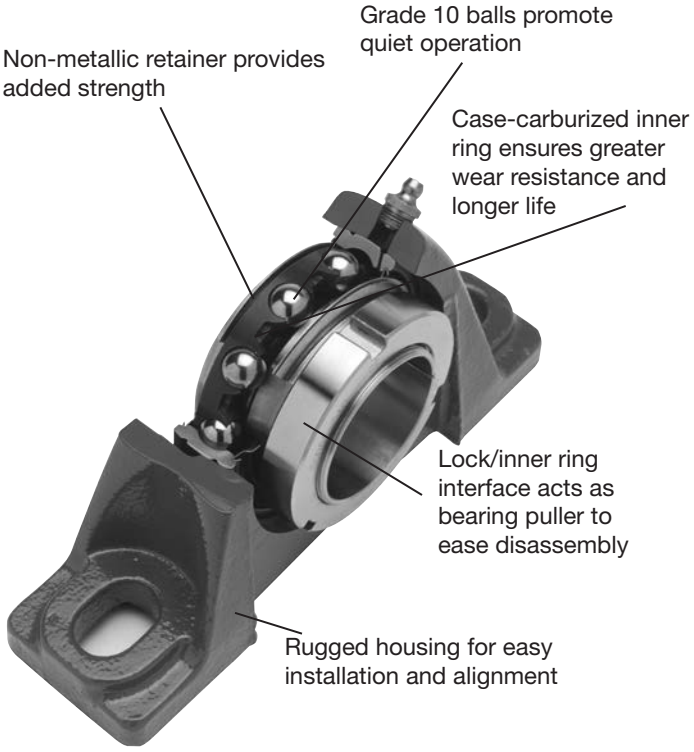

Easy-On / Easy-Off

During mounting, the patent pending collar/inner ring system locks the tapered adapter sleeve under the bearing and onto the shaft. To dismount, the built in bearing puller pulls the bearing off the adapter and pushes the adapter in the opposite direction (out from under the bearing).



DualGuard Seal

- Mechanically retained single lip seal for added strength
  - Purgeable design
  - Nitrile rubber lip
  - Keeps out contaminants
- Rubberized flinger
  - Dodge-only technology
  - Rubberized flinger provides external protection and discards contaminants as it rotates
  - Molded baffles in flinger act like a paddle wheel to help deflect liquids
  - Molded rubber increases the radius of the flinger which increases the acceleration rate of the contaminants as they are thrown away from the bearing
- Rubber molding on the flinger is extended to the outer race of the bearing providing better protection than non-rubberized versions

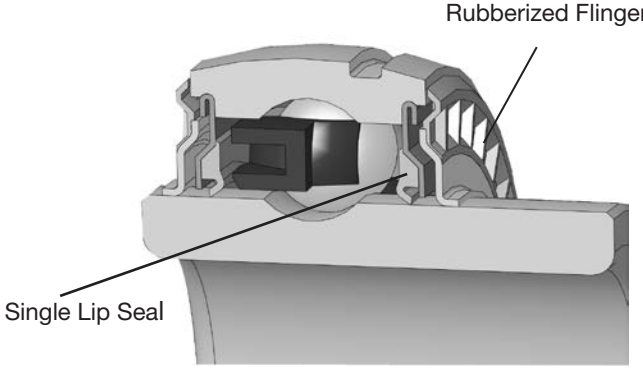

Note: Instruction manuals and drawings for Dodge bearings are available on www.dodge-pt.com



FEATURES/BENEFITS

GRIP TIGHT® Adapter Ball Bearings

Housing Styles

Off the shelf and shaft ready, the DODGE GRIP TIGHT adapter ball bearing is offered for normal and medium duty in a variety of housing styles, including pillow block; tapped base; two-, three-, and four-bolt flange, piloted flange; take-up, and E-Z KLEEN design.



Less Product Inventory for Significant Savings

With DODGE GRIP TIGHT adapter ball bearings, you can reduce your inventory as much as 25% - 45%. Rather than stocking a complete line of individual bore sizes for each housing style, you can now purchase a housing assembly and adapters separately, with the adapter determining the bore size within a housing series.



Damage Free Shafting

The new DODGE GRIP TIGHT adapter bearing features a unique adapter-mount design that is specifically developed to withstand axial forces that are generated during mounting or dismounting. The adapter provides superior holding power, as well as suppresses fretting corrosion and vibration.

In test comparisons, a setscrew mounted bearing promotes shaft fretting corrosion and scarring. But the new DODGE GRIP TIGHT adapter bearing comes off the shaft quickly and reveals no shaft fretting corrosion or scarring. There is no need to recondition your shaft so you save time and avoid added labor/maintenance.





Full Contact on Shaft for Better Grip, Less Vibration

Setscrew locking can distort the inner ring and cause system induced vibration. But with the new DODGE GRIP TIGHT adapter, the adapter attaches itself to the shaft for full concentric contact 360° through the length of the bearing.



Note: Instruction manuals and drawings for Dodge bearings are available on www.dodge-pt.com

HOW TO ORDER/NOMENCLATURE



GRIP TIGHT
Thin Wall Adapter Ball Bearings

There are two ways to specify DODGE Bearings. Most of the product offerings have part numbers with listings shown throughout this catalog. Use of the part numbers ensures accurate order processing.

When part numbers are not shown, the product may be specified by description or part name.

This method is used when ordering units that include modifications or options. To order by description, use the nomenclature key shown below and add any special instructions to the end of the description for options not covered by the nomenclature.

Nomenclature

P2B **GT** **104S** **NL**

- **NL** — Modification or feature
  - CR = Corrosion Resistant Insert
  - HT = High Temperature option (400˚ F maximum)
  - LL = Low torque labyrinth seal
  - MOD = Modified
  - NL = No Lube Fitting (sealed for life)
  - P = Polymer Housing
  - SH = Stainless Steel Housing
- **104S** — Shaft Size
  - Inches:
    - First digit = Number of inches
    - Second & third digits = Numbers of sixteenths of an inch
      - 104 = Indicates 1-4/16 or 1-1/4
    - S = Next smaller ring size. E.g. 1-1/4 206 would be written as 104S
  - Metric
    - First two digits = number of millimeters
    - M = Metric
- **GT** — Bearing Type
  - GT = Wide inner ring, normal duty, thin wall adapter locking
  - GTM = Wide inner ring, medium duty, thin wall adapter locking
  - Suffixes to the above:
    - AH = Air Handling
    - B = Low backing height pillow block
    - EZ = E-KLEEN (used with polymer and stainless steel housed units)
    - U = Higher back pillow block (for interchangeability with competitor pillow blocks)
    - ED = Extreme Duty
- **P2B** — Housing
  - F2B = 2-bolt flange
  - F4B = 4-bolt flange
  - FB = Flange bracket
  - FC = Flanged cartridge (piloted flange)
  - INS = Insert
  - NSTU = Narrow slot take-up
  - P2B = 2-bolt base pillow block
  - TB = Tapped base pillow block
  - WSTU = Wide slot take-up



GRIP TIGHT Adapter Ball Bearings

DODGE mounted ball bearings are primarily designed for radial loading. However, they have the capacity to carry thrust loads and combined radial/thrust loads. The maximum recommended load which can be applied is limited by various components in the system, such as bearing, housing, shaft attachments, speed and life requirements. DODGE mounted ball bearings have been applied successfully when these limits have been exceeded under controlled operating conditions. Contact DODGE Engineering for applications which exceed these recommendations.

Select a bearing from the Selection Chart that has a radial load rating at the operating speed equal to or greater than the calculated Equivalent Radial load for a desired L_{10} life. This simple method is all that is required for the majority of general applications and provides for occasional average shock loads.

L_{10} Hours Life-is the life which may be expected for at least 90% of a given group of bearings operating under identical conditions. For an L_{10} hours life other than those listed in the Selection Chart, multiply the equivalent Radial load by one of the following factors. For 50,000 L_{10} hours life, use a factor of 1.18 and for 80,000, use 1.39. Then select a bearing from the bold face (30,000) L_{10} ratings only in the Selection Chart that has a rating equal to or greater than this value.

Heavy Service-For heavy shock loads, frequent shock loads or severe vibrations, add up to 50% (according to severity of conditions) to the Equivalent Radial Load to obtain a Modified Equivalent Radial Load. Consult Application Engineering for additional selection assistance.

A thrust load value of C/10 is recommended as a guide for general applications and will give adequate L_{10} life. Where substantial radial load pulls the housing away from the mounting base, both the hold-down bolts and housing must be of adequate strength. Auxiliary load carrying devices, such as sheer bars, are advisable for side or end-loading of pillow blocks and radial loads for flange units.

To determine the L_{10} hours life for loads and RPM's not listed use the following equation:

Where: $$L_{10}=\left(\frac{C}{P}\right)^3 \times \frac{16{,}667}{N}$$

L_{10} = Life, hours
C = Dynamic Capacity, lbs. or N
P = Equivalent Radial Load, lbs. or N
N = Revolutions per minute

When the load on a ball bearing is solely a radial load with no thrust (axial) load, the Equivalent Radial Load (P) is equal to the actual radial load. However, when a thrust (axial) load is applied, the radial and thrust loads applied must be converted into an Equivalent Radial Load. The use of the X (radial factor) and Y (thrust factor) from Table 1 convert the actual applied thrust and radial loads to an Equivalent Radial Load which has the same effect on the life of a bearing as a radial load of this magnitude.

$P = (X \times F_R) + (Y \times F_A)$

Where:
P = Equivalent Radial Load, lbs.
F_R = Radial load, lbs.
F_A = Thrust load, lbs.
e = Thrust load to radial load factor (Table 1)
X = Radial load factor (Table 1)
Y = Thrust Factor (Table 1)
C_O = Basic static capacity

To find X and Y, first calculate F_A/C_O to determine e. Calculate F_A/F_R and compare to e to determine the X and Y factors to use from Table 1 .

Substitute all known values into the Equivalent Radial Load equation. The Equivalent Radial loads (P) thus determined can be used in the L_{10} life formula or compared to the allowable Equivalent Radial Load rating desired in the expanded rating chart to select a bearing (Table 2).

If calculated value of P is less than F_R, use $P=F_R$.

Table 1:

F_A / C_0	e	Radial/Thrust Factors			
		If F_A/F_R is equal to or less than e		If F_A/F_R is greater than e	
		$F_A/F_R \le e$		$F_A/F_R > e$	
		X	Y	X	Y
0.014	0.19	1	0	0.56	2.30
0.021	0.21	1	0	0.56	2.15
0.028	0.22	1	0	0.56	1.99
0.042	0.24	1	0	0.56	1.85
0.056	0.26	1	0	0.56	1.71
0.070	0.27	1	0	0.56	1.63
0.084	0.28	1	0	0.56	1.55
0.110	0.30	1	0	0.56	1.45
0.170	0.34	1	0	0.56	1.31
0.280	0.38	1	0	0.56	1.15
0.420	0.42	1	0	0.56	1.04
0.560	0.44	1	0	0.56	1.00

Lubrication-DODGE Ball Bearings are lubricated at the factory and are ready to run. The bearings are initially lubricated with a lithium complex based grease and should be relubricated with the same or some equivalent. For high speeds, high loads, extreme temperatures and other abnormal operating conditions, special greases may be required. Contact DODGE Application Engineering for recommendations on these types of applications.

Misalignment-DODGE Ball Bearings are designed to allow a maximum of ± 2° static misalignment. These bearings are not suitable for dynamic misalignment. To ensure good alignment, mounting surfaces must be checked for flatness and must lie in the same plane. When tightening base bolts, each bolt should be alternately tightened in incremental torque values until full torque is achieved to prevent the angular shifting of the pillow block that occurs when one bolt is tightened to its full torque. Shimming may be required to minimize misalignment.

Suggested Lubrication Intervals in Weeks

Hours Run Per Day	RPM							
	1 to 250	251 to 500	501 to 750	751 to 1000	1001 to 1500	1501 to 2000	2001 to 2500	2501 to Max.
8	12	12	10	7	5	4	3	2
16	12	7	5	4	2	2	1	1
24	10	5	3	2	1	1	1	1

Shaft Tolerances

Normal Shaft Size Inches	Commercial Shaft Tolerances Inches	Recommended Shaft Tolerances GRIP TIGHT Ball Bearings Inches
Up to 1-1/2	+0.000 -0.002	+0.000 -0.002
Over 1-1/2" to 2-1/2	+0.000 -0.003	+0.000 -0.003
Over 2-1/2	+0.000 -0.004	+0.000 -0.004

Note: Bearing analysis program "BEST" is available on www.ptwizard.com

FEATURES/BENEFITS PAGE B5-2 | HOW TO ORDER/NOMENCLATURE PAGE B5-4 | SELECTION/DIMENSIONS PAGE B5-8 | RELATED PRODUCTS PAGE B5-70

SELECTION

DODGE®



GRIP TIGHT Adapter Ball Bearings

Table 2: Easy Selection Table

Ring Size	Shaft Size GT	Shaft Size GTM	Dynamic Capacity C (Lbs)	Static Capacity Co (Lbs)	Max RPM Proguard Plus (Contact) Seal	Max RPM Labyrinth (LL) Seal	L_{10} Life Hours	Allowable Equivalent Radial Load Ratings (Lbs.) At Various RPM 50	150	250	500	750	1,000	1,500	1,750	2,200	2,600	3,000	3,200	3,600
203	1/2 5/8 17mm	-	2,158	1079	12,000	14,500	20,000	551	382	322	256	224	203	177	169	156	148	141	138	133
							30,000	**482**	**334**	**282**	**224**	**195**	**177**	**155**	**147**	**136**	**129**	**123**	**120**	**116**
							40,000	438	303	256	203	177	161	141	134	124	117	112	109	105
							60,000	382	265	224	177	155	141	123	117	108	102	98	96	92
							100,000	322	224	189	150	131	119	104	99	91	86	82	81	77
204	3/4 20mm	-	2,899	1482	10,000	13,000	20,000	741	513	433	344	300	273	238	226	210	198	189	185	178
							30,000	**647**	**449**	**378**	**300**	**262**	**238**	**208**	**198**	**183**	**173**	**165**	**162**	**155**
							40,000	588	408	344	273	238	217	189	180	166	157	150	147	141
							60,000	513	356	300	238	208	189	165	157	145	138	131	128	123
							100,000	433	300	253	201	176	160	139	132	123	116	111	108	104
205	7/8 15/16 1 25mm	3/4	3,146	1769	9,000	12,000	20,000	804	557	470	373	326	296	259	246	228	215	205	201	193
							30,000	**702**	**487**	**411**	**326**	**285**	**259**	**226**	**215**	**199**	**188**	**179**	**176**	**169**
							40,000	638	442	373	296	259	235	205	195	181	171	163	159	153
							60,000	557	386	326	259	226	205	179	170	158	149	142	139	134
							100,000	470	326	275	218	191	173	151	144	133	126	120	117	113
206	1-1/8 1-3/16 1-1/4 30mm	1 25mm	4,368	2538	7,500	11,000	20,000	1,116	774	652	518	452	411	359	341	316	299	285	279	268
							30,000	**975**	**676**	**570**	**452**	**395**	**359**	**314**	**298**	**276**	**261**	**249**	**244**	**234**
							40,000	886	614	518	411	359	326	285	271	251	237	226	221	213
							60,000	774	536	452	359	314	285	249	237	219	207	198	193	186
							100,000	652	452	382	303	265	240	210	199	185	175	167	163	157
207	1-1/4 1-3/8 1-7/16 35mm	1-3/16 1-1/4 30mm	5,759	3461	6,300	9,500	20,000	1,471	1,020	860	683	596	542	473	450	417	394	376	368	354
							30,000	**1,285**	**891**	**752**	**596**	**521**	**473**	**414**	**393**	**364**	**344**	**328**	**321**	**309**
							40,000	1,168	810	683	542	473	430	376	357	331	313	298	292	281
							60,000	1,020	707	596	473	414	376	328	312	289	273	261	255	245
							100,000	860	596	503	399	349	317	277	263	244	230	220	215	207
208	1-1/2 40mm	1-7/16 1-1/2** 35mm	7,332	4475	5,600	8,500	20,000	1,873	1,299	1,095	869	759	690	603	573	531	502	478	468	450
							30,000	**1,636**	**1,134**	**957**	**759**	**663**	**603**	**527**	**500**	**463**	**438**	**418**	**409**	**393**
							40,000	1,487	1,031	869	690	603	548	478	454	421	398	380	372	357
							60,000	1,299	900	759	603	527	478	418	397	368	348	332	325	312
							100,000	1,095	759	641	508	444	403	352	335	310	293	280	274	263
209	1-5/8 1-14/16 1-3/4 45mm	1-1/2 40mm	7,891	4906	5,300	8,000	20,000	2,016	1,398	1,179	936	817	743	649	616	571	540	515	504	485
							30,000	**1,761**	**1,221**	**1,030**	**817**	**714**	**649**	**567**	**538**	**499**	**472**	**450**	**440**	**423**
							40,000	1,600	1,109	936	743	649	589	515	489	453	429	409	400	385
							60,000	1,398	969	817	649	567	515	450	427	396	374	357	349	336
							100,000	1,179	817	689	547	478	434	379	360	334	316	301	295	283
210	1-15/16 2 50mm	1-11/16 1-3/4 45mm	7,891	5213	4,800	7,500	20,000	2,016	1,398	1,179	936	817	743	649	616	571	540	515	504	485
							30,000	**1,761**	**1,221**	**1,030**	**817**	**714**	**649**	**567**	**538**	**499**	**472**	**450**	**440**	**423**
							40,000	1,600	1,109	936	743	649	589	515	489	453	429	409	400	385
							60,000	1,398	969	817	649	567	515	450	427	396	374	357	349	336
							100,000	1,179	817	689	547	478	434	379	360	334	316	301	295	283
211	2 2-3/16 55mm	1-15/16 2 50mm	9,755	6588	4,300	6,700	20,000	2,492	1,728	1,457	1,157	1,010	918	802	762	706	668	636	623	599
							30,000	**2,177**	**1,509**	**1,273**	**1,010**	**883**	**802**	**701**	**665**	**617**	**583**	**556**	**544**	**523**
							40,000	1,978	1,371	1,157	918	802	729	636	605	560	530	505	494	475
							60,000	1,728	1,198	1,010	802	701	636	556	528	489	463	441	432	415
							100,000	1,457	1,010	852	676	591	537	469	445	413	390	372	364	350
212	2-1/4 2-7/16 60mm	2-3/16 2-1/4 55mm	11,791	8100	4,000	6,000	20,000	3,012	2,088	1,761	1,398	1,221	1,110	969	921	853	807	769	753	724
							30,000	**2,631**	**1,824**	**1,539**	**1,221**	**1,067**	**969**	**847**	**804**	**745**	**705**	**672**	**658**	**632**
							40,000	2,391	1,657	1,398	1,110	969	881	769	731	677	640	611	598	575
							60,000	2,088	1,448	1,221	969	847	769	672	638	592	559	533	522	502
							100,000	1,761	1,221	1,030	818	714	649	567	538	499	472	450	440	423
214	2-11/16 70mm	2-7/16 2-1/2 65mm	13,995	9838	3,600	5,000	20,000	3,575	2,479	2,091	1,659	1,450	1,317	1,150	1,093	1,013	958	913	894	859
							30,000	**3,123**	**2,165**	**1,826**	**1,450**	**1,266**	**1,150**	**1,005**	**955**	**885**	**837**	**798**	**781**	**751**
							40,000	2,837	1,967	1,659	1,317	1,150	1,045	913	867	804	760	725	709	682
							60,000	2,479	1,719	1,450	1,150	1,005	913	798	758	702	664	633	620	596
							100,000	2,091	1,450	1,223	970	848	770	673	639	592	560	534	523	503
215	2-15/16 75mm	2-11/16 70mm	14,872	11108	3,200	4,800	20,000	3,799	2,634	2,222	1,763	1,540	1,400	1,223	1,161	1,076	1,018	970	950	913
							30,000	**3,319**	**2,301**	**1,941**	**1,540**	**1,346**	**1,223**	**1,068**	**1,015**	**940**	**889**	**848**	**830**	**798**
							40,000	3,015	2,091	1,763	1,400	1,223	1,111	970	922	854	808	770	754	725
							60,000	2,634	1,826	1,540	1,223	1,068	970	848	805	746	706	673	658	633
							100,000	2,222	1,540	1,299	1,031	901	818	715	679	629	595	567	555	534
216	-	2-15/16 3 75mm	17,407	13102	3,000	4,500	20,000	4,446	3,083	2,600	2,064	1,803	1,638	1,431	1,359	1,259	1,191	1,136	1,112	1,069
							30,000	**3,884**	**2,693**	**2,272**	**1,803**	**1,575**	**1,431**	**1,250**	**1,187**	**1,100**	**1,041**	**992**	**971**	**934**
							40,000	3,529	2,447	2,064	1,638	1,431	1,300	1,136	1,079	1,000	946	901	882	848
							60,000	3,083	2,138	1,803	1,431	1,250	1,136	992	942	873	826	788	771	741
							100,000	2,600	1,803	1,521	1,207	1,054	958	837	795	737	697	664	650	625
218	-	3-7/16 3-1/2 85mm	21,451	16641	2,600	3,800	20,000	5,479	3,799	3,204	2,543	2,222	2,019	1,763	1,675	1,552	1,468	1,400	1,370	1,317
							30,000	**4,787**	**3,319**	**2,799**	**2,222**	**1,941**	**1,763**	**1,541**	**1,463**	**1,356**	**1,282**	**1,223**	**1,197**	**1,151**
							40,000	4,349	3,015	2,543	2,019	1,763	1,602	1,400	1,330	1,232	1,165	1,111	1,087	1,045
							60,000	3,799	2,634	2,222	1,763	1,541	1,400	1,223	1,161	1,076	1,018	970	950	913
							100,000	3,204	2,222	1,874	1,487	1,299	1,181	1,031	980	908	859	819	801	770

** Piloted flange Only

Labyrinth seal required when operating in the shaded area

Note: Bearing analysis program "BEST" is available on www.ptwizard.com

FEATURES/BENEFITS PAGE B5-2 | HOW TO ORDER/NOMENCLATURE PAGE B5-4 | SELECTION/DIMENSIONS PAGE B5-8 | RELATED PRODUCTS PAGE B5-70

DODGE®



GRIP TIGHT Adapter Ball Bearings

Table 2: Easy Selection Table

Ring Size	Shaft Size GT	Shaft Size GTM	L_{10} LIFE Hours	Allowable Equivalent Radial Load Ratings (Lbs.) At Various RPM																				
				3,800	4,000	4,300	4,500	4,800	5,000	5,300	5,600	6,000	6,300	6,700	7,500	8,000	8,500	9,000	9,500	10,000	11,000	12,000	13,000	14,500
203	1/2 5/8 17mm	-	20,000	130	128	125	123	120	119	116	114	112	110	108	104	102	100	98	96	94	91	89	86	83
			30,000	**114**	**112**	**109**	**107**	**105**	**104**	**102**	**100**	**98**	**96**	**94**	**91**	**89**	**87**	**85**	**84**	**82**	**80**	**77**	**75**	**73**
			40,000	103	102	99	98	96	94	92	91	89	87	85	82	81	79	77	76	75	72	70	69	66
			60,000	90	89	87	85	83	82	81	79	77	76	75	72	70	69	68	66	65	63	62	60	58
			100,000	76	75	73	72	70	69	68	67	65	64	63	61	59	58	57	56	55	53	52	51	49
204	3/4 20mm	-	20,000	175	172	168	165	162	160	156	154	150	148	145	139	136	134	131	129	127	123	119	116	
			30,000	**153**	**150**	**147**	**144**	**141**	**139**	**137**	**134**	**131**	**129**	**126**	**122**	**119**	**117**	**115**	**113**	**111**	**107**	**104**	**101**	
			40,000	139	136	133	131	128	127	124	122	119	117	115	111	108	106	104	102	101	97	95	92	
			60,000	121	119	116	115	112	111	108	107	104	102	100	97	95	93	91	89	88	85	83	80	
			100,000	102	101	98	97	95	93	92	90	88	86	85	82	80	78	77	75	74	72	70	68	
205	7/8 15/16 1 25mm	3/4	20,000	190	187	182	179	176	173	170	167	163	160	157	151	148	145	142	140	137	133	129		
			30,000	**166**	**163**	**159**	**157**	**153**	**151**	**148**	**146**	**142**	**140**	**137**	**132**	**129**	**127**	**124**	**122**	**120**	**116**	**113**		
			40,000	151	148	145	142	139	137	135	132	129	127	125	120	117	115	113	111	109	106	103		
			60,000	132	129	126	124	122	120	118	116	113	111	109	105	103	101	99	97	95	92	90		
			100,000	111	109	106	105	103	101	99	97	95	94	92	88	87	85	83	82	80	78	76		
206	1-1/8 1-3/16 1-1/4 30mm	1 25mm	20,000	263	259	253	249	244	240	236	231	226	223	218	210	206	201	198	194	191	185			
			30,000	**230**	**226**	**221**	**217**	**213**	**210**	**206**	**202**	**198**	**194**	**190**	**183**	**180**	**176**	**173**	**170**	**167**	**161**			
			40,000	209	206	201	198	193	191	187	184	180	177	173	167	163	160	157	154	151	147			
			60,000	183	180	175	173	169	167	163	160	157	154	151	146	143	140	137	135	132	128			
			100,000	154	151	148	146	143	141	138	135	132	130	128	123	120	118	116	113	112	108			
207	1-1/4 1-3/8 1-7/16 35mm	1-3/16 1-1/4 30mm	20,000	347	341	333	328	321	317	311	305	298	293	287	277	271	266	261	256					
			30,000	**303**	**298**	**291**	**287**	**281**	**277**	**272**	**267**	**261**	**256**	**251**	**242**	**237**	**232**	**228**	**224**					
			40,000	276	271	265	261	255	252	247	242	237	233	228	220	215	211	207	203					
			60,000	241	237	231	228	223	220	216	212	207	203	199	192	188	184	181	177					
			100,000	203	200	195	192	188	185	182	178	174	172	168	162	158	155	152	150					
208	1-1/2 40mm	1-7/16 1-1/2** 35mm	20,000	442	435	424	418	409	403	396	389	380	374	366	352	345	338							
			30,000	**386**	**380**	**371**	**365**	**357**	**352**	**346**	**339**	**332**	**326**	**320**	**308**	**301**	**295**							
			40,000	351	345	337	332	325	320	314	308	301	297	290	280	274	268							
			60,000	307	301	294	290	284	280	274	269	263	259	254	244	239	234							
			100,000	259	254	248	244	239	236	231	227	222	218	214	206	202	198							
209	1-5/8 1-11/16 1-3/4 45mm	1-1/2 40mm	20,000	476	468	457	450	440	434	426	418	409	402	394	379	371								
			30,000	**416**	**409**	**399**	**393**	**385**	**379**	**372**	**365**	**357**	**351**	**344**	**331**	**324**								
			40,000	378	371	362	357	349	345	338	332	324	319	313	301	295								
			60,000	330	324	317	312	305	301	295	290	283	279	273	263	257								
			100,000	278	274	267	263	257	254	249	245	239	235	230	222	217								
210	1-15/16 2 50mm	1-11/16 1-3/4 45mm	20,000	476	468	457	450	440	434	426	418	409	402	394	379									
			30,000	**416**	**409**	**399**	**393**	**385**	**379**	**372**	**365**	**357**	**351**	**344**	**331**									
			40,000	378	371	362	357	349	345	338	332	324	319	313	301									
			60,000	330	324	317	312	305	301	295	290	283	279	273	263									
			100,000	278	274	267	263	257	254	249	245	239	235	230	222									
211	2 2-3/16 55mm	1-15/16 2 50mm	20,000	588	578	565	556	544	537	527	517	505	497	487										
			30,000	**514**	**505**	**493**	**486**	**475**	**469**	**460**	**452**	**441**	**434**	**425**										
			40,000	467	459	448	441	432	426	418	410	401	394	386										
			60,000	408	401	391	386	377	372	365	358	350	345	338										
			100,000	344	338	330	325	318	314	308	302	295	291	285										
212	2-1/4 2-7/16 60mm	2-3/16 2-1/4 55mm	20,000	711	699	682	672	658	649	636	625	611												
			30,000	**621**	**611**	**596**	**587**	**575**	**567**	**556**	**546**	**533**												
			40,000	564	555	542	533	522	515	505	496	485												
			60,000	493	485	473	466	456	450	441	433	423												
			100,000	416	409	399	393	385	379	372	365	357												
214	2-11/16 70mm	2-7/16 2-1/2 65mm	20,000	844	830	810	798	781	770															
			30,000	**737**	**725**	**708**	**697**	**682**	**673**															
			40,000	670	658	643	633	620	611															
			60,000	585	575	562	553	541	534															
			100,000	494	485	474	467	457	450															
215	2-15/16 75mm	2-11/16 70mm	20,000	897	882	861	848	830																
			30,000	**783**	**770**	**752**	**741**	**725**																
			40,000	712	700	683	673	658																
			60,000	622	611	597	588	575																
			100,000	524	516	503	496	485																
216	-	2-15/16 3 75mm	20,000	1,050	1,032	1,007	992																	
			30,000	**917**	**901**	**880**	**867**																	
			40,000	833	819	800	788																	
			60,000	728	715	698	688																	
			100,000	614	603	589	580																	
218	-	3-7/16 3-1/2 85mm	20,000	1,294																				
			30,000	**1,130**																				
			40,000	1,027																				
			60,000	897																				
			100,000	756																				

** Piloted Flange Only

Labyrinth seal required when operating in the shaded area

Note: Bearing analysis program "BEST" is available on www.ptwizard.com

FEATURES/BENEFITS PAGE B5-2	HOW TO ORDER/NOMENCLATURE PAGE B5-4	SELECTION/DIMENSIONS PAGE B5-8	RELATED PRODUCTS PAGE B5-70

SELECTION/DIMENSIONS

GRIP TIGHT Adapter Ball Bearings
GT NORMAL DUTY PILLOW BLOCKS

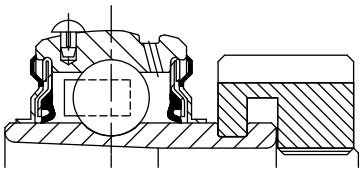

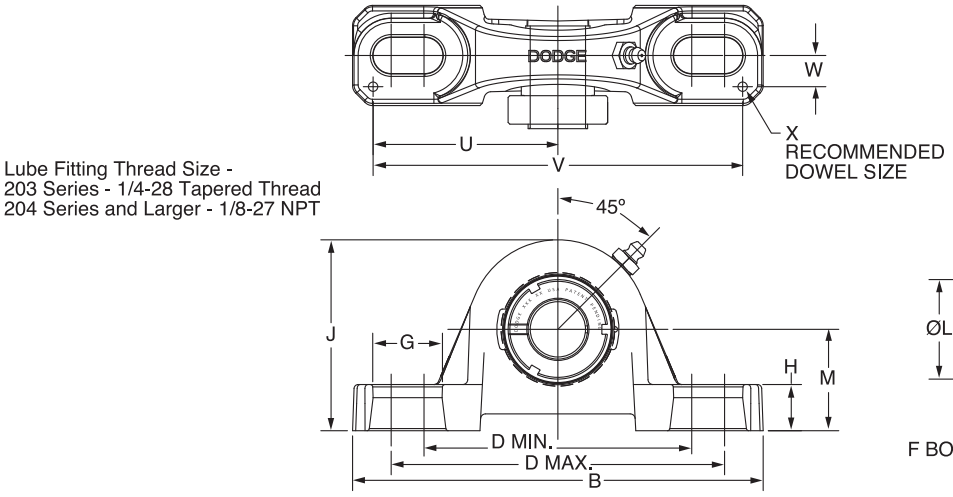

Series	Shaft Size	Complete Unit		Unit without Adapter Sleeve & Lock Nut		Adapter Sleeve & Lock Nut Assembly	
		Part No.	Description	Part No.	Description	Part No.	Description
203	1/2	**129150**	P2B-GT-008	**129420**	P2B-GT-03	**136588**	AN-GT-03-008-D
	5/8	**129151**	P2B-GT-010			**136521**	AN-GT-03-010-D
	17mm	***129203***	*P2B-GT-17M*			***136589***	*AN-GT-03-17M-D*
203 (GTU)	1/2	**129152**	P2B-GTU-008	**129432**	P2B-GTU-03	**136588**	AN-GT-03-008-D
	5/8	**129153**	P2B-GTU-010			**136521**	AN-GT-03-010-D
	17mm	***129204***	*P2B-GTU-17M*			***136589***	*AN-GT-03-17M-D*
204	3/4	**129154**	P2B-GT-012	**129421**	P2B-GT-04	**136522**	AN-GT-04-012-D
	20mm	***129205***	*P2B-GT-20M*			***136553***	*AN-GT-04-20M-D*
205	7/8	**129155**	P2B-GT-014	**129422**	P2B-GT-05	**136590**	AN-GT-05-014-D
	15/16	**129156**	P2B-GT-015			**136523**	AN-GT-05-015-D
	1	**129157**	P2B-GT-100			**136524**	AN-GT-05-100-D
	25mm	***129206***	*P2B-GT-25M*			***136554***	*AN-GT-05-25M-D*
206	1-1/8	**129158**	P2B-GT-102	**129423**	P2B-GT-06	**136525**	AN-GT-06-102-D
	1-3/16	**129159**	P2B-GT-103			**136526**	AN-GT-06-103-D
	1-1/4	**129160**	P2B-GT-104S			**136527**	AN-GT-06-104S-D
	30mm	***129207***	*P2B-GT-30M*			***136555***	*AN-GT-06-30M-D*
206 (GTU)	1-1/8	**129841**	P2B-GTU-102	**129419**	P2B-GTU-06	**136525**	AN-GT-06-102-D
	1-3/16	**129842**	P2B-GTU-103			**136526**	AN-GT-06-103-D
	1-1/4	**129843**	P2B-GTU-104S			**136527**	AN-GT-06-104-D
	30mm	***129208***	*P2B-GTU-30M*			***136555***	*AN-GT-06-30M-D*
207	1-1/4	**129161**	P2B-GT-104	**129424**	P2B-GT-07	**136528**	AN-GT-07-104-D
	1-3/8	**129162**	P2B-GT-106			**136591**	AN-GT-07-106-D
	1-7/16	**129163**	P2B-GT-107			**136529**	AN-GT-07-107-D
	35mm	***129209***	*P2B-GT-35M*			***136556***	*AN-GT-07-35M-D*

DODGE®



GRIP TIGHT Adapter Ball Bearings
GT NORMAL DUTY PILLOW BLOCKS

Series	Shaft Size	Weight lbs / *kg*	A	B	C	D min.	D max.	F Bolt Dia.	G	H	J	L	M	R#	S#	U	V	W	X*	Z
203	1/2	1.5	1.29	5.00	1.20	3.25	4.06	3/8	0.84	0.47	2.14	1.40	1.06	0.40	0.89	2.25	4.50	0.38	0.12	0.90
	5/8	1.5																		
	17mm	*0.6*	*32.8*	*127.0*	*30.5*	*82.6*	*103.1*	*M10*	*21.3*	*11.9*	*54.4*	*35.6*	*27.0*	*10.2*	*22.6*	*57.2*	*114.3*	*9.7*	*3.0*	*22.9*
203 (GTU)	1/2	1.7	1.29	5.00	1.20	3.25	4.06	3/8	0.84	0.59	2.27	1.40	1.19	0.40	0.89	2.25	4.50	0.38	0.12	0.90
	5/8	1.6																		
	17mm	*0.7*	*32.8*	*127.0*	*30.5*	*82.6*	*103.1*	*M10*	*21.3*	*15.0*	*57.7*	*35.6*	*30.2*	*10.2*	*22.6*	*57.2*	*114.3*	*9.7*	*3.0*	*22.9*
204	3/4	2.1	1.48	5.25	1.34	3.38	4.19	3/8	0.85	0.53	2.56	1.50	1.31	0.46	1.02	2.25	4.50	0.50	0.12	1.03
	20mm	*1.0*	*37.6*	*133.4*	*34.0*	*85.9*	*106.4*	*M10*	*21.6*	*13.5*	*65.0*	*38.1*	*33.3*	*11.7*	*25.9*	*57.2*	*114.3*	*12.7*	*3.0*	*26.2*
205	7/8	2.3	1.46	5.50	1.40	3.69	4.50	3/8	0.85	0.58	2.77	1.80	1.44	0.48	0.98	2.50	5.00	0.50	0.12	1.00
	15/16	2.3																		
	1	2.3																		
	25mm	*1.1*	*37.1*	*139.7*	*35.6*	*93.7*	*114.3*	*M10*	*21.6*	*14.7*	*70.4*	*45.7*	*36.5*	*12.2*	*24.9*	*63.5*	*127.0*	*12.7*	*3.0*	*25.4*
206	1-1/8	3.7	1.61	6.25	1.75	4.25	5.00	1/2	0.94	0.68	3.25	2.08	1.63	0.52	1.09	2.88	5.76	0.56	0.12	1.13
	1-3/16	3.6																		
	1-1/4	3.6																		
	30mm	*1.7*	*40.9*	*158.8*	*44.5*	*108.0*	*127.0*	*M12*	*23.9*	*17.3*	*82.6*	*52.8*	*41.3*	*13.2*	*27.7*	*73.2*	*146.3*	*14.2*	*3.0*	*28.7*
206 (GTU)	1-1/8	3.8	1.61	6.25	1.75	4.25	5.00	1/2	0.94	0.75	3.31	2.08	1.69	0.52	1.09	2.88	5.76	0.56	0.12	1.13
	1-3/16	3.7																		
	1-1/4	3.7																		
	30mm	*1.7*	*40.9*	*158.8*	*44.5*	*108.0*	*127.0*	*M12*	*23.9*	*19.1*	*84.1*	*52.8*	*42.9*	*13.2*	*27.7*	*73.2*	*146.3*	*14.2*	*3.0*	*28.7*
207	1-1/4	4.9	1.62	6.50	1.75	4.68	5.44	1/2	0.94	0.71	3.75	2.38	1.88	0.54	1.08	2.91	5.82	0.56	0.12	1.14
	1-3/8	4.9																		
	1-7/16	4.8																		
	35mm	*2.2*	*41.1*	*165.1*	*44.5*	*118.9*	*138.2*	*M12*	*23.9*	*18.0*	*95.3*	*60.5*	*47.6*	*13.7*	*27.4*	*73.9*	*147.8*	*14.2*	*3.0*	*29.0*

* Only 1 pillow block can be dowel pinned per shaft

R & S Dimensions will vary slightly depending on true shaft diameter

FEATURES/BENEFITS PAGE B5-2	HOW TO ORDER/NOMENCLATURE PAGE B5-4	SELECTION PAGE B5-5	RELATED PRODUCTS PAGE B5-70

SELECTION/DIMENSIONS

GRIP TIGHT Adapter Ball Bearings
GT NORMAL DUTY PILLOW BLOCKS

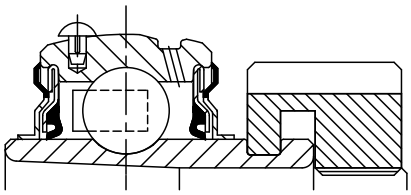

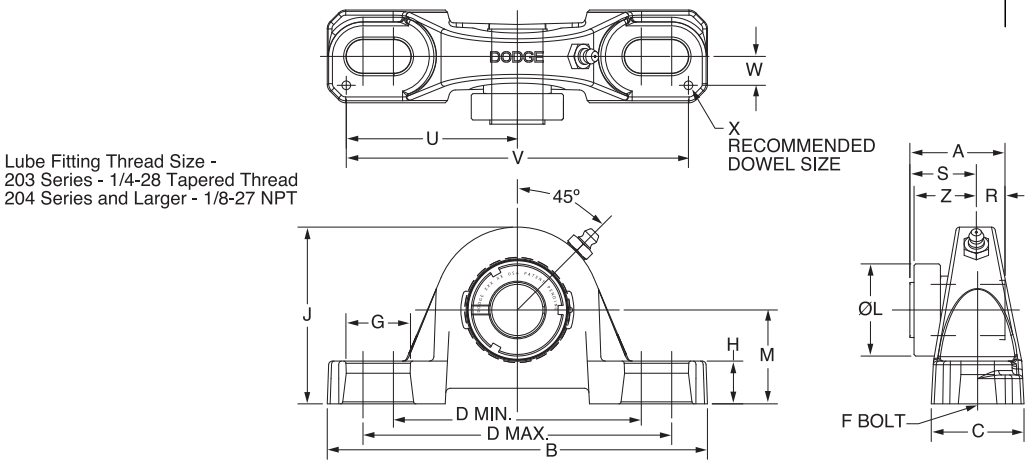

Series	Shaft Size	Complete Unit		Unit without Adapter Sleeve & Lock Nut		Adapter Sleeve & Lock Nut Assembly	
		Part No.	Description	Part No.	Description	Part No.	Description
208	1-1/2	**129164**	P2B-GT-108	**129425**	P2B-GT-08	**136530**	AN-GT-08-108-D
	1-5/8	**129371**	P2B-GT-110			**136592**	AN-GT-08-110-D
	40mm	***129149***	*P2B-GT-40M*			***136593***	*AN-GT-08-40M*-D
209	1-5/8	**129165**	P2B-GT-110L	**129426**	P2B-GT-09	**136531**	AN-GT-09-110L-D
	1-11/16	**129166**	P2B-GT-111			**136532**	AN-GT-09-111-D
	1-3/4	**129167**	P2B-GT-112			**136533**	AN-GT-09-112-D
	45mm	***129211***	*P2B-GT-45M*			***136557***	*AN-GT-09-45M*-D
210	1-15/16	**129168**	P2B-GT-115	**129427**	P2B-GT-10	**136534**	AN-GT-10-115-D
	2	**129169**	P2B-GT-200			**136535**	AN-GT-10-200-D
	50mm	***129212***	*P2B-GT-50M*			***136558***	*AN-GT-10-50M*-D
211	2	**129224**	P2B-GTM-200	**129428**	P2B-GT-11	**136600**	AN-GTM-11-200-D
	2-3/16	**129170**	P2B-GT-203			**136536**	AN-GT-11-203-D
	2-1/4	**129376**	P2B-GT-204			**136537**	AN-GT-11-204-D
	55mm	***129213***	*P2B-GT-55M*			***136559***	*AN-GT-11-55M*-D
212	2-1/4	**129226**	P2B-GTM-204	**129429**	P2B-GT-12	**136601**	AN-GTM-12-204-D
	2-7/16	**129171**	P2B-GT-207			**136538**	AN-GT-12-207-D
	60mm	***129214***	*P2B-GT-60M*			***136594***	*AN-GT-12-60M*-D
214	2-1/2	**129228**	P2B-GTM-208	**129430**	P2B-GT-14	**136548**	AN-GTM-14-208-D
	2-11/16	**129172**	P2B-GT-211			**136539**	AN-GT-14-211-D
	70mm	***129215***	*P2B-GT-70M*			***136560***	*AN-GT-14-70M*-D
215	2-15/16	**129173**	P2B-GT-215	**129431**	P2B-GT-15	**136540**	AN-GT-15-215-D
	3	**@**	P2B-GT-300			**136595**	AN-GT-15-300-D
	75mm	***129216***	*P2B-GT-75M*			***136596***	*AN-GT-15-75M*-D
215 (GTU)	2-15/16	**068726**	P2B-GTU-215	**068727**	P2B-GTU-15	**136540**	AN-GT-15-215-D
	3	**@**	P2B-GTU-300			**136595**	AN-GT-15-300-D
	75mm	***@***	*P2B-GTU-75M*			***136596***	*AN-GT-15-75M*-D

@ Assembled To Order

DODGE®



GRIP TIGHT Adapter Ball Bearings
GT NORMAL DUTY PILLOW BLOCKS

Series	Shaft Size	Weight lbs kg	A	B	C	D		F Bolt Dia.	G	H	J	L	M	R#	S#	U	V	W	X*	Z
						min.	max.													
208	1-1/2	6.0	1.84	7.25	1.93	5.18	5.88	1/2	0.91	0.93	4.19	2.62	2.13	0.61	1.23	3.26	6.52	0.69	0.12	1.23
	1-5/8	5.8																		
	40mm	*2.7*	*46.7*	*184.2*	*49.0*	*131.6*	*149.4*	*M12*	*23.1*	*23.6*	*106.4*	*66.5*	*54.0*	*15.5*	*31.2*	*82.8*	*165.6*	*17.5*	*3.0*	*31.2*
209	1-5/8	6.8	1.85	7.44	2.00	5.50	6.19	1/2	0.90	0.75	4.28	2.86	2.13	0.62	1.23	3.38	6.76	0.69	0.12	1.26
	1-11/16	6.8																		
	1-3/4	6.7																		
	45mm	*3.1*	*47.0*	*189.0*	*50.8*	*139.7*	*157.2*	*M12*	*22.9*	*19.1*	*108.7*	*72.6*	*54.0*	*15.7*	*31.2*	*85.9*	*171.7*	*17.5*	*3.0*	*32.0*
210	1-15/16	8.5	1.86	8.12	2.25	6.00	6.68	5/8	1.02	0.75	4.53	3.13	2.25	0.63	1.23	3.69	7.38	0.81	0.12	1.26
	2	8.4																		
	50mm	*3.9*	*47.2*	*206.2*	*57.2*	*152.4*	*169.7*	*M16*	*25.9*	*19.1*	*115.1*	*79.5*	*57.2*	*16.0*	*31.2*	*93.7*	*187.5*	*20.6*	*3.0*	*32.0*
211	2	12.2	1.93	8.88	2.30	6.38	7.44	5/8	1.21	0.88	4.96	3.43	2.50	0.67	1.26	3.94	7.88	0.81	0.12	1.32
	2-3/16	11.8																		
	2-1/4	11.7																		
	55mm	*5.6*	*49.0*	*225.6*	*58.4*	*162.1*	*189.0*	*M16*	*30.7*	*22.4*	*126.0*	*87.1*	*63.5*	*17.0*	*32.0*	*100.1*	*200.2*	*20.6*	*3.0*	*33.5*
212	2-1/4	17.5	2.12	9.50	2.37	6.88	7.94	5/8	1.21	0.88	5.40	3.69	2.75	0.73	1.39	4.25	8.50	0.88	0.12	1.46
	2-7/16	17.2																		
	60mm	*7.0*	*53.8*	*241.3*	*60.2*	*174.8*	*201.7*	*M16*	*30.7*	*22.4*	*137.2*	*93.7*	*69.9*	*18.5*	*35.3*	*108.0*	*215.9*	*22.4*	*3.0*	*37.1*
214	2-1/2	19.4	2.39	10.75	2.69	7.50	8.50	3/4	1.32	0.94	6.09	4.00	3.00	0.84	1.55	4.88	9.76	0.94	0.12	1.58
	2-11/16	19.3																		
	70mm	*8.9*	*60.7*	*273.1*	*68.3*	*190.5*	*215.9*	*M18*	*33.5*	*23.9*	*154.7*	*101.6*	*76.2*	*21.3*	*39.4*	*124.0*	*247.9*	*23.9*	*3.0*	*40.1*
215	2-15/16	25.2	2.46	11.75	2.88	8.50	9.50	7/8	1.44	1.00	6.75	4.44	3.50	0.86	1.60	5.48	10.96	1.04	0.12	1.60
	3	25.0																		
	75mm	*10.1*	*62.5*	*298.5*	*73.2*	*215.9*	*241.3*	*M22*	*36.6*	*25.4*	*171.5*	*112.8*	*88.9*	*21.8*	*40.6*	*139.2*	*278.4*	*26.4*	*3.0*	*40.6*
215 (GTU)	2-15/16	24.9	2.46	11.75	2.88	8.50	9.50	7/8	1.44	1.00	6.50	4.44	3.25	0.86	1.60	5.48	10.96	1.04	0.12	1.60
	3	24.7																		
	75mm	*10.0*	*62.5*	*298.5*	*73.2*	*215.9*	*241.3*	*M22*	*36.6*	*25.4*	*165.1*	*112.8*	*82.6*	*21.8*	*40.6*	*139.2*	*278.4*	*26.4*	*3.0*	*40.6*

* Only 1 pillow block can be dowel pinned per shaft

R & S Dimensions will vary slightly depending on true shaft diameter

FEATURES/BENEFITS PAGE B5-2	HOW TO ORDER/NOMENCLATURE PAGE B5-4	SELECTION PAGE B5-5	RELATED PRODUCTS PAGE B5-70

SELECTION/DIMENSIONS

GRIP TIGHT Adapter Ball Bearings
GTAH AIR HANDLING NORMAL DUTY PILLOW BLOCKS

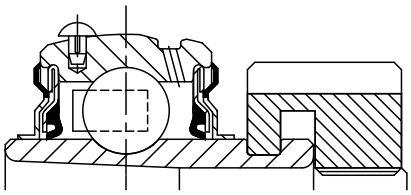

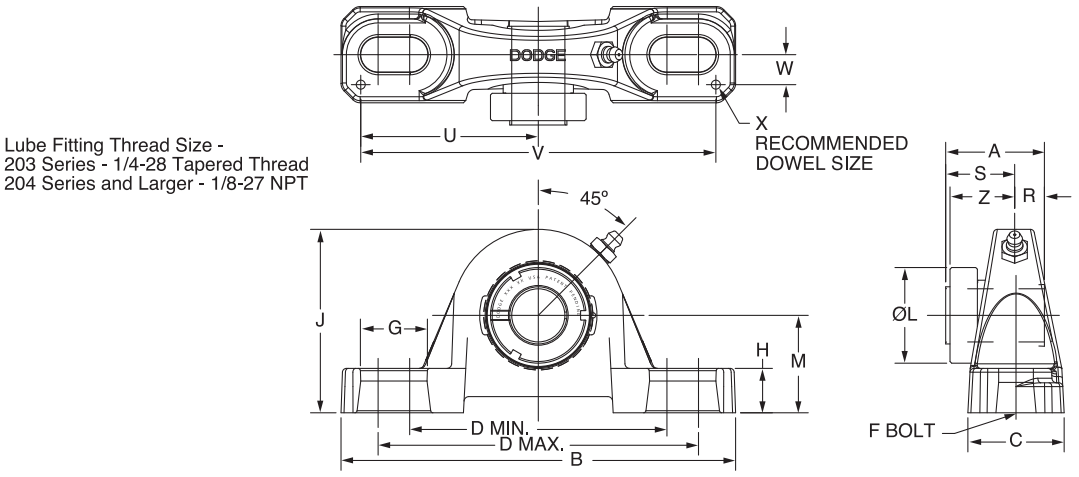

Series	Shaft Size	Complete Unit		Unit without Adapter Sleeve & Lock Nut		Adapter Sleeve & Lock Nut Assembly	
		Part No.	Description	Part No.	Description	Part No.	Description
203	1/2	@	P2B-GTAH-008	062993	P2B-GTAH-03	136588	AN-GT-03-008-D
	5/8	067713	P2B-GTAH-010			136521	AN-GT-03-010-D
	17mm	*@*	*P2B-GTAH-17M*			*136589*	*AN-GT-03-17M*-D
203 (GTU)	1/2	@	P2B-GTUAH-008	077417	P2B-GTUAH-03	136588	AN-GT-03-008-D
	5/8	077416	P2B-GTUAH-010			136521	AN-GT-03-010-D
	17mm	*@*	*P2B-GTUAH-17M*			*136589*	*AN-GT-03-17M*-D
204	3/4	129174	P2B-GTAH-012	129442	P2B-GTAH-04	136522	AN-GT-04-012-D
	20mm	*068622*	*P2B-GTAH-20M*			*136553*	*AN-GT-04-20M*-D
205	7/8	@	P2B-GTAH-014	129443	P2B-GTAH-05	136590	AN-GT-05-014-D
	15/16	@	P2B-GTAH-015			136523	AN-GT-05-015-D
	1	129175	P2B-GTAH-100			136574	AN-GT-05-100-D
	25mm	*062978*	*P2B-GTAH-25M*			*136554*	*AN-GT-05-25M*-D
206	1-1/8	067865	P2B-GTAH-102	129399	P2B-GTAH-06	136525	AN-GT-06-102-D
	1-3/16	129176	P2B-GTAH-103			136526	AN-GT-06-103-D
	1-1/4	@	P2B-GTAH-104S			136527	AN-GT-06-104S-D
	30mm	*@*	*P2B-GTAH-30M*			*136555*	*AN-GT-06-30M*-D
206 (GTU)	1-1/8	067865	P2B-GTUAH-102	129452	P2B-GTUAH-06	136525	AN-GT-06-102-D
	1-3/16	129177	P2B-GTUAH-103			136526	AN-GT-06-103-D
	1-1/4	@	P2B-GTUAH-104S			136527	AN-GT-06-104S-D
	30mm	*@*	*P2B-GTUAH-30M*			*136555*	*AN-GT-06-30M*-D
207	1-1/4	067910	P2B-GTAH-104	129444	P2B-GTAH-07	136528	AN-GT-07-104-D
	1-3/8	073960	P2B-GTAH-106			136591	AN-GT-07-106-D
	1-7/16	129178	P2B-GTAH-107			136529	AN-GT-07-107-D
	35mm	*@*	*P2B-GTAH-35M*			*136556*	*AN-GT-07-35M*-D

@ Assembled to order



GRIP TIGHT Adapter Ball Bearings
GTAH AIR HANDLING NORMAL DUTY PILLOW BLOCKS

Series	Shaft Size	Weight lbs / *kg*	A	B	C	D min.	D max.	F Bolt Dia.	G	H	J	L	M	R#	S#	U	V	W	X*	Z
203	1/2	1.6	1.29	5.00	1.20	3.25	4.06	3/8	0.84	0.47	2.14	1.40	1.06	0.40	0.89	2.25	4.50	0.38	0.12	0.90
	5/8	1.5																		
	17mm	*0.6*	*32.8*	*127.0*	*30.5*	*82.6*	*103.1*	*M10*	*21.3*	*11.9*	*54.4*	*35.6*	*27.0*	*10.2*	*22.6*	*57.2*	*114.3*	*9.7*	*3.0*	*22.9*
203 (GTU)	1/2	1.7	1.29	5.00	1.20	3.25	4.06	3/8	0.84	0.59	2.27	1.40	1.19	0.40	0.89	2.25	4.50	0.38	0.12	0.90
	5/8	1.6																		
	17mm	*0.7*	*32.8*	*127.0*	*30.5*	*82.6*	*103.1*	*M10*	*21.3*	*15.0*	*57.7*	*35.6*	*30.2*	*10.2*	*22.6*	*57.2*	*114.3*	*9.7*	*3.0*	*22.9*
204	3/4	2.1	1.48	5.25	1.34	3.38	4.19	3/8	0.85	0.53	2.56	1.50	1.31	0.46	1.02	2.25	4.50	0.50	0.12	1.03
	20mm	*1.0*	*37.6*	*133.4*	*34.0*	*85.9*	*106.4*	*M10*	*21.6*	*13.5*	*65.0*	*38.1*	*33.3*	*11.7*	*25.9*	*57.2*	*114.3*	*12.7*	*3.0*	*26.2*
205	7/8	2.3	1.46	5.50	1.40	3.69	4.50	3/8	0.85	0.58	2.77	1.80	1.44	0.48	0.98	2.50	5.00	0.50	0.12	1.00
	15/16	2.3																		
	1	2.3																		
	25mm	*1.1*	*37.1*	*139.7*	*35.6*	*93.7*	*114.3*	*M10*	*21.6*	*14.7*	*70.4*	*45.7*	*36.5*	*12.2*	*24.9*	*63.5*	*127.0*	*12.7*	*3.0*	*25.4*
206	1-1/8	3.7	1.61	6.25	1.75	4.25	5.00	1/2	0.94	0.68	3.25	2.08	1.63	0.52	1.09	2.88	5.76	0.56	0.12	1.13
	1-3/16	3.6																		
	1-1/4	3.6																		
	30mm	*1.7*	*40.9*	*158.8*	*44.5*	*108.0*	*127.0*	*M12*	*23.9*	*17.3*	*82.6*	*52.8*	*41.3*	*13.2*	*27.7*	*73.2*	*146.3*	*14.2*	*3.0*	*28.7*
206 (GTU)	1-1/8	3.8	1.61	6.25	1.75	4.25	5.00	1/2	0.94	0.75	3.31	2.08	1.69	0.52	1.09	2.88	5.76	0.56	0.12	1.13
	1-3/16	3.7																		
	1-1/4	3.7																		
	30mm	*1.7*	*40.9*	*158.8*	*44.5*	*108.0*	*127.0*	*M12*	*23.9*	*19.1*	*84.1*	*52.8*	*42.9*	*13.2*	*27.7*	*73.2*	*146.3*	*14.2*	*3.0*	*28.7*
207	1-1/4	4.9	1.62	6.50	1.75	4.68	5.44	1/2	0.94	0.71	3.75	2.38	1.88	0.54	1.08	2.91	5.82	0.56	0.12	1.14
	1-3/8	4.9																		
	1-7/16	4.8																		
	35mm	*2.2*	*41.1*	*165.1*	*44.5*	*118.9*	*138.2*	*M12*	*23.9*	*18.0*	*95.3*	*60.5*	*47.6*	*13.7*	*27.4*	*73.9*	*147.8*	*14.2*	*3.0*	*29.0*

* Only 1 pillow block can be dowel pinned per shaft

R & S Dimensions will vary slightly depending on true shaft diameter

FEATURES/BENEFITS PAGE B5-2	HOW TO ORDER/NOMENCLATURE PAGE B5-4	SELECTION PAGE B5-5	RELATED PRODUCTS PAGE B5-70

SELECTION/DIMENSIONS

GRIP TIGHT Adapter Ball Bearings
GTAH AIR HANDLING NORMAL DUTY PILLOW BLOCKS

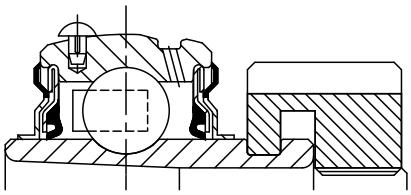

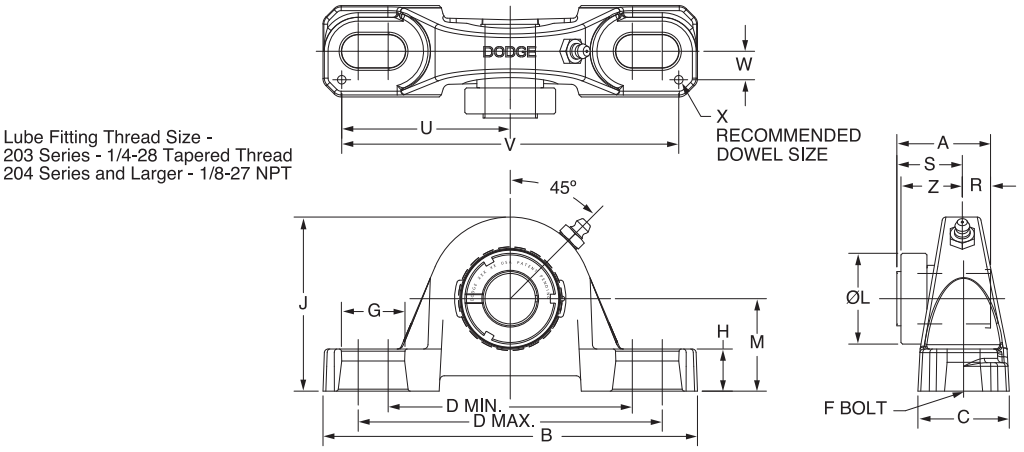

Series	Shaft Size	Complete Unit		Unit without Adapter Sleeve & Lock Nut		Adapter Sleeve & Lock Nut Assembly	
		Part No.	Description	Part No.	Description	Part No.	Description
208	1-1/2	**065620**	P2B-GTAH-108	**129445**	P2B-GTAH-08	**136530**	AN-GT-08-108-D
	1-5/8	**@**	P2B-GTAH-110			**136592**	AN-GT-08-110-D
	40mm	***076763***	*P2B-GTAH-40M*			***136593***	*AN-GT-08-40M*-D
209	1-5/8	**064841**	P2B-GTAH-110L	**129446**	P2B-GTAH-09	**136531**	AN-GT-09-110L-D
	1-11/16	**129179**	P2B-GTAH-111			**136532**	AN-GT-09-111-D
	1-3/4	**@**	P2B-GTAH-112			**136533**	AN-GT-09-112-D
	45mm	***074353***	*P2B-GTAH-45M*			***136557***	*AN-GT-09-45M*-D
210	1-15/16	**129180**	P2B-GTAH-115	**129447**	P2B-GTAH-10	**136534**	AN-GT-10-115-D
	2	**@**	P2B-GTAH-200			**136535**	AN-GT-10-200-D
	50mm	***068715***	*P2B-GTAH-50M*			***136558***	*AN-GT-10-50M*-D
211	2	**@**	P2B-GTMAH-200	**129448**	P2B-GTAH-11	**136600**	AN-GTM-11-200-D
	2-3/16	**129181**	P2B-GTAH-203			**136536**	AN-GT-11-203-D
	2-1/4	**@**	P2B-GTAH-204			**136537**	AN-GT-11-204-D
	55mm	***068683***	*P2B-GTAH-55M*			***136559***	*AN-GT-11-55M*-D
212	2-1/4	**@**	P2B-GTMAH-204	**129449**	P2B-GTAH-12	**136601**	AN-GTM-12-204-D
	2-7/16	**129182**	P2B-GTAH-207			**136538**	AN-GT-12-207-D
	60mm	**@**	*P2B-GTAH-60M*			***136594***	*AN-GT-12-60M*-D
214	2-1/2	**068865**	P2B-GTMAH-208	**129450**	P2B-GTAH-14	**136547**	AN-GTM-14-208-D
	2-11/16	**062958**	P2B-GTAH-211			**136548**	AN-GT-14-211-D
	70mm	***067777***	*P2B-GTAH-70M*			***136568***	*AN-GT-14-70M*-D
215	2-15/16	**064463**	P2B-GTAH-215	**062682**	P2B-GTAH-15	**136540**	AN-GT-15-215-D
	3	**@**	P2B-GTAH-300			**136595**	AN-GT-15-300-D
	75mm	**@**	*P2B-GTAH-75M*			***136596***	*AN-GT-15-75M*-D
215 (GTU)	2-15/16	**062861**	P2B-GTUAH-215	**062862**	P2B-GTUAH-15	**136540**	AN-GT-15-215-D
	3	**@**	P2B-GTUAH-300			**136595**	AN-GT-15-300-D
	75mm	**@**	*P2B-GTUAH-75M*			***136596***	*AN-GT-15-75M*-D

@ Assembled to order



GRIP TIGHT Adapter Ball Bearings
GTAH AIR HANDLING NORMAL DUTY PILLOW BLOCKS

Series	Shaft Size	Weight lbs *kg*	A	B	C	D		F Bolt Dia.	G	H	J	L	M	R#	S#	U	V	W	X*	Z
						min.	max.													
208	1-1/2	6.0	1.84	7.25	1.93	5.18	5.88	1/2	0.91	0.93	4.19	2.62	2.13	0.61	1.23	3.26	6.52	0.69	0.12	1.23
	1-5/8	5.9																		
	40mm	*2.7*	*46.7*	*184.2*	*49.0*	*131.6*	*149.4*	*M12*	*23.1*	*23.6*	*106.4*	*66.5*	*54.0*	*15.5*	*31.2*	*82.8*	*165.6*	*17.5*	*3.0*	*31.2*
209	1-5/8	6.8	1.85	7.44	2.00	5.50	6.19	1/2	0.90	0.75	4.28	2.86	2.13	0.62	1.23	3.38	6.76	0.69	0.12	1.26
	1-11/16	6.8																		
	1-3/4	6.7																		
	45mm	*3.1*	*47.0*	*189.0*	*50.8*	*139.7*	*157.2*	*M12*	*22.9*	*19.1*	*108.7*	*72.6*	*54.0*	*15.7*	*31.2*	*85.9*	*171.7*	*17.5*	*3.0*	*32.0*
210	1-15/16	8.5	1.86	8.12	2.25	6.00	6.68	5/8	1.02	0.75	4.53	3.13	2.25	0.63	1.23	3.69	7.38	0.81	0.12	1.26
	2	8.4																		
	50mm	*3.9*	*47.2*	*206.2*	*57.2*	*152.4*	*169.7*	*M16*	*25.9*	*19.1*	*115.1*	*79.5*	*57.2*	*16.0*	*31.2*	*93.7*	*187.5*	*20.6*	*3.0*	*32.0*
211	2	12.2	1.93	8.88	2.30	6.38	7.44	5/8	1.21	0.88	4.96	3.43	2.50	0.67	1.26	3.94	7.88	0.81	0.12	1.32
	2-3/16	11.8																		
	2-1/4	11.7																		
	55mm	*5.6*	*49.0*	*225.6*	*58.4*	*162.1*	*189.0*	*M16*	*30.7*	*22.4*	*126.0*	*87.1*	*63.5*	*17.0*	*32.0*	*100.1*	*200.2*	*20.6*	*3.0*	*33.5*
212	2-1/4	17.5	2.12	9.50	2.37	6.88	7.94	5/8	1.21	0.88	5.40	3.69	2.75	0.73	1.39	4.25	8.50	0.88	0.12	1.46
	2-7/16	17.2																		
	60mm	*7.0*	*53.8*	*241.3*	*60.2*	*174.8*	*201.7*	*M16*	*30.7*	*22.4*	*137.2*	*93.7*	*69.9*	*18.5*	*35.3*	*108.0*	*215.9*	*22.4*	*3.0*	*37.1*
214	2-1/2	19.4	2.39	10.75	2.69	7.50	8.50	3/4	1.32	0.94	6.09	4.00	3.00	0.84	1.55	4.88	9.76	0.94	0.12	1.58
	2-11/16	19.3																		
	70mm	*8.9*	*60.7*	*273.1*	*68.3*	*190.5*	*215.9*	*M18*	*33.5*	*23.9*	*154.7*	*101.6*	*76.2*	*21.3*	*39.4*	*124.0*	*247.9*	*23.9*	*3.0*	*40.1*
215	2-15/16	25.2	2.46	11.75	2.88	8.50	9.50	7/8	1.44	1.00	6.75	4.44	3.50	0.86	1.60	5.48	10.96	1.04	0.12	1.60
	3	25.0																		
	75mm	*10.1*	*62.5*	*298.5*	*73.2*	*215.9*	*241.3*	*M22*	*36.6*	*25.4*	*171.5*	*112.8*	*88.9*	*21.8*	*40.6*	*139.2*	*278.4*	*26.4*	*3.0*	*40.6*
215 (GTU)	2-15/16	24.9	2.46	11.75	2.88	8.50	9.50	7/8	1.44	1.00	6.50	4.44	3.25	0.86	1.60	5.48	10.96	1.04	0.12	1.60
	3	24.7																		
	75mm	*11.4*	*62.5*	*298.5*	*73.2*	*215.9*	*241.3*	*M22*	*36.6*	*25.4*	*165.1*	*112.8*	*82.6*	*21.8*	*40.6*	*139.2*	*278.4*	*26.4*	*3.0*	*40.6*

* Only 1 pillow block can be dowel pinned per shaft

R & S Dimensions will vary slightly depending on true shaft diameter

FEATURES/BENEFITS PAGE B5-2	HOW TO ORDER/NOMENCLATURE PAGE B5-4	SELECTION PAGE B5-5	RELATED PRODUCTS PAGE B5-70

SELECTION/DIMENSIONS

DODGE®



GRIP TIGHT Adapter Ball Bearings
GTB NORMAL DUTY PILLOW BLOCKS

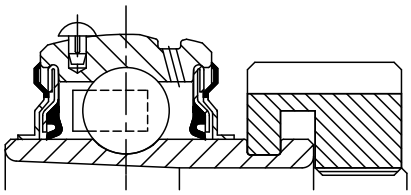

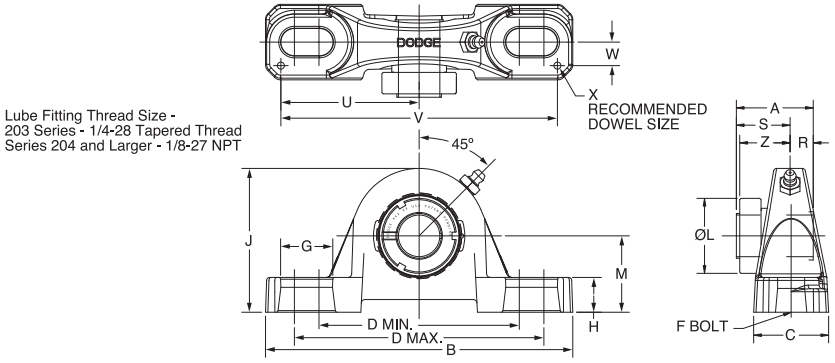

Series	Shaft Size	Complete Unit		Unit without Adapter Sleeve & Lock Nut		Adapter Sleeve & Lock Nut Assembly	
		Part No.	Description	Part No.	Description	Part No.	Description
203 (GT)	1/2	**129150**	P2B-GT-008	**129420**	P2B-GT-03	**136588**	AN-GT-03-008-D
	5/8	**129151**	P2B-GT-010			**136521**	AN-GT-03-010-D
	17mm	***129203***	*P2B-GT-17M*			***136589***	*AN-GT-03-17M*-D
204	3/4	**129183**	P2B-GTB-012	**129433**	P2B-GTB-04	**136522**	AN-GT-04-012-D
	20mm	***129040***	*P2B-GTB-20M*			***136553***	*AN-GT-04-20M*-D
205	7/8	**129184**	P2B-GTB-014	**129434**	P2B-GTB-05	**136590**	AN-GT-05-014-D
	15/16	**129185**	P2B-GTB-015			**136523**	AN-GT-05-015-D
	1	**129186**	P2B-GTB-100			**136524**	AN-GT-05-100-D
	25mm	***129041***	*P2B-GTB-25M*			***136554***	*AN-GT-05-25M*-D
206	1-1/8	**129187**	P2B-GTB-102	**129435**	P2B-GTB-06	**136525**	AN-GT-06-102-D
	1-3/16	**129188**	P2B-GTB-103			**136526**	AN-GT-06-103-D
	1-1/4	**129189**	P2B-GTB-104S			**136527**	AN-GT-06-104S-D
	30mm	***129042***	*P2B-GTB-30M*			***136555***	*AN-GT-06-30M*-D
207	1-1/4	**129190**	P2B-GTB-104	**129436**	P2B-GTB-07	**136528**	AN-GT-07-104-D
	1-3/8	**129191**	P2B-GTB-106			**136591**	AN-GT-07-106-D
	1-7/16	**129192**	P2B-GTB-107			**136529**	AN-GT-07-107-D
	35mm	***129043***	*P2B-GTB-35M*			***136556***	*AN-GT-07-35M*-D
208	1-1/2	**129193**	P2B-GTB-108	**129437**	P2B-GTB-08	**136530**	AN-GT-08-108-D
	1-5/8	**129372**	P2B-GTB-110			**136592**	AN-GT-08-110-D
	40mm	***129210***	*P2B-GTB-40M*			***136593***	*AN-GT-08-40M*-D
209	1-5/8	**129194**	P2B-GTB-110L	**129438**	P2B-GTB-09	**136531**	AN-GT-09-110L-D
	1-11/16	**129195**	P2B-GTB-111			**136532**	AN-GT-09-111-D
	1-3/4	**129196**	P2B-GTB-112			**136533**	AN-GT-09-112-D
	45mm	***129044***	*P2B-GTB-45M*			***136557***	*AN-GT-09-45M*-D
210	1-15/16	**129197**	P2B-GTB-115	**129439**	P2B-GTB-10	**136534**	AN-GT-10-115-D
	2	**129198**	P2B-GTB-200			**136535**	AN-GT-10-200-D
	50mm	***129045***	*P2B-GTB-50M*			***136558***	*AN-GT-10-50M*-D
211	2	**129199**	P2B-GTB-200L	**129440**	P2B-GTB-11	**136600**	AN-GTM-11-200-D
	2-3/16	**129200**	P2B-GTB-203			**136536**	AN-GT-11-203-D
	2-1/4	**129377**	P2B-GTB-204			**136537**	AN-GT-11-204-D
	55mm	***129046***	*P2B-GTB-55M*			***136559***	*AN-GT-11-55M*-D
212	2-1/4	**129201**	P2B-GTB-204L	**129441**	P2B-GTB-12	**136601**	AN-GTM-12-204-D
	2-7/16	**129202**	P2B-GTB-207			**136538**	AN-GT-12-207-D
	60mm	***129047***	*P2B-GTB-60M*			***136594***	*AN-GT-12-60M*-D
215	2-15/16	**062741**	P2B-GTB-215	**062742**	P2B-GTB-15	**136540**	AN-GT-15-215-D
	3	**@**	P2B-GTB-300			**136595**	AN-GT-15-300-D
	75mm	***@***	*P2B-GTB-75M*			***136596***	*AN-GT-15-75M*-D

@ Assembled to order

FEATURES/BENEFITS PAGE B5-2	HOW TO ORDER/NOMENCLATURE PAGE B5-4	SELECTION PAGE B5-5	RELATED PRODUCTS PAGE B5-70



GRIP TIGHT Adapter Ball Bearings
GTB NORMAL DUTY PILLOW BLOCKS

Series	Shaft Size	Weight lbs / *kg*	A	B	C	D min.	D max.	F Bolt Dia.	G	H	J	L	M	R#	S#	U	V	W	X*	Z
203	1/2	1.6	1.29	5.00	1.20	3.25	4.06	3/8	0.84	0.47	2.14	1.40	1.06	0.40	0.89	2.25	4.50	0.38	0.12	0.90
	5/8																			
	17mm	*0.6*	*32.8*	*127.0*	*30.5*	*82.6*	*103.1*	*M10*	*21.3*	*11.9*	*54.4*	*35.6*	*26.9*	*10.2*	*22.6*	*57.2*	*114.3*	*9.7*	*3.0*	*22.9*
204	3/4	2.1	1.48	5.25	1.34	3.38	4.19	3/8	0.85	0.47	2.49	1.50	1.25	0.46	1.02	2.25	4.50	0.50	0.12	1.03
	20mm	*1.0*	*37.6*	*133.4*	*34.0*	*85.9*	*106.4*	*M10*	*21.6*	*11.9*	*63.2*	*38.1*	*31.8*	*11.7*	*25.9*	*57.2*	*114.3*	*12.7*	*3.0*	*26.2*
205	7/8	2.3	1.46	5.50	1.40	3.69	4.50	3/8	0.85	0.45	2.64	1.80	1.31	0.48	0.98	2.50	5.00	0.50	0.12	1.00
	15/16	2.3																		
	1	2.3																		
	25mm	*1.1*	*37.1*	*139.7*	*35.6*	*93.7*	*114.3*	*M10*	*21.6*	*11.4*	*67.1*	*45.7*	*33.3*	*12.2*	*24.9*	*63.5*	*127.0*	*12.7*	*3.0*	*25.4*
206	1-1/8	3.8	1.61	6.25	1.75	4.25	5.00	1/2	0.94	0.62	3.19	2.08	1.56	0.52	1.09	2.88	5.76	0.56	0.12	1.13
	1-3/16	3.7																		
	1-1/4	3.7																		
	30mm	*1.7*	*40.9*	*158.8*	*44.5*	*108.0*	*127.0*	*M12*	*23.9*	*15.8*	*81.0*	*52.8*	*39.6*	*13.2*	*27.7*	*73.2*	*146.3*	*14.2*	*3.0*	*28.7*
207	1-1/4	4.9	1.62	6.50	1.75	4.68	5.44	1/2	0.94	0.65	3.69	2.38	1.81	0.54	1.08	2.91	5.82	0.56	0.12	1.14
	1-3/8	4.9																		
	1-7/16	4.8																		
	35mm	*2.2*	*41.1*	*165.1*	*44.5*	*118.9*	*138.2*	*M12*	*23.9*	*16.5*	*93.7*	*60.5*	*46.0*	*13.7*	*27.4*	*73.9*	*147.8*	*14.2*	*3.0*	*29.0*
208	1-1/2	6.0	1.84	7.25	1.93	5.18	5.88	1/2	0.91	0.75	4.00	2.62	1.94	0.61	1.23	3.26	6.52	0.69	0.12	1.23
	1-5/8	5.9																		
	40mm	*2.7*	*46.7*	*184.2*	*49.0*	*131.6*	*149.4*	*M12*	*23.1*	*19.1*	*101.6*	*66.5*	*49.3*	*15.5*	*31.2*	*82.8*	*165.6*	*17.5*	*3.0*	*31.2*
209	1-5/8	6.8	1.85	7.44	2.00	5.50	6.19	1/2	0.90	0.69	4.21	2.86	2.06	0.62	1.23	3.38	6.76	0.69	0.12	1.26
	1-11/16	6.8																		
	1-3/4	6.7																		
	45mm	*3.1*	*47.0*	*189.0*	*50.8*	*139.7*	*157.2*	*M12*	*22.9*	*17.5*	*106.9*	*72.6*	*52.3*	*15.7*	*31.2*	*85.9*	*171.7*	*17.5*	*3.0*	*32.0*
210	1-15/16	8.5	1.86	8.12	2.25	6.00	6.68	5/8	1.02	0.68	4.47	3.13	2.19	0.63	1.23	3.69	7.38	0.81	0.12	1.26
	2	8.4																		
	50mm	*3.9*	*47.2*	*206.2*	*57.2*	*152.4*	*169.7*	*M16*	*25.9*	*17.3*	*113.5*	*79.5*	*55.6*	*16.0*	*31.2*	*93.7*	*187.5*	*20.6*	*3.0*	*32.0*
211	2	12.2	1.93	8.88	2.30	6.38	7.44	5/8	1.21	0.81	4.90	3.43	2.44	0.67	1.26	3.94	7.88	0.81	0.12	1.32
	2-3/16	11.9																		
	2-1/4	11.8																		
	55mm	*5.6*	*49.0*	*225.6*	*58.4*	*162.1*	*189.0*	*M16*	*30.7*	*20.6*	*124.5*	*87.1*	*62.0*	*17.0*	*32.0*	*100.1*	*200.2*	*20.6*	*3.0*	*33.5*
212	2-1/4	17.5	2.12	9.50	2.37	6.88	7.94	5/8	1.21	0.81	5.34	3.69	2.69	0.73	1.39	4.25	8.50	0.88	0.12	1.46
	2-7/16																			
	60mm	*7.0*	*53.8*	*241.3*	*60.2*	*174.8*	*201.7*	*M16*	*30.7*	*20.6*	*135.6*	*93.7*	*68.3*	*18.5*	*35.3*	*108.0*	*215.9*	*22.4*	*3.0*	*37.1*
215	2-15/16	24.9	2.46	11.75	2.88	8.50	9.50	7/8	1.44	1.06	6.56	4.44	3.31	0.86	1.60	5.48	10.96	1.04	0.12	1.60
	3	24.7																		
	75mm	*11.4*	*62.5*	*298.5*	*73.2*	*215.9*	*241.3*	*M22*	*36.6*	*26.9*	*166.6*	*112.8*	*84.1*	*21.8*	*40.6*	*139.2*	*278.4*	*26.4*	*3.0*	*40.6*

* Only 1 pillow block can be dowel pinned per shaft

R & S Dimensions will vary slightly depending on true shaft diameter

FEATURES/BENEFITS PAGE B5-2 | HOW TO ORDER/NOMENCLATURE PAGE B5-4 | SELECTION PAGE B5-5 | RELATED PRODUCTS PAGE B5-70

SELECTION/DIMENSIONS

GRIP TIGHT Adapter Ball Bearings
GTH-E EXPANSION PILLOW BLOCKS

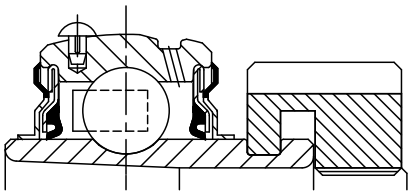

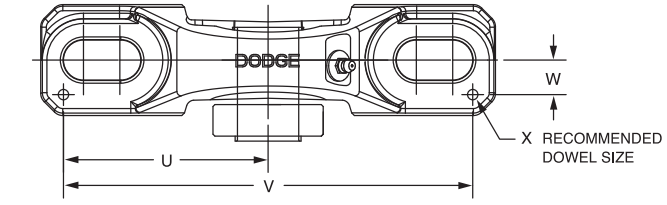

Lube fitting thread size:
1/4-28 tapered thrad

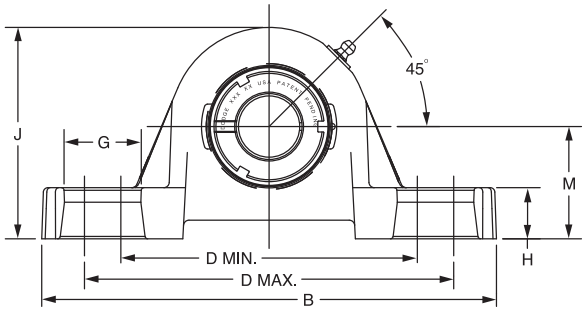

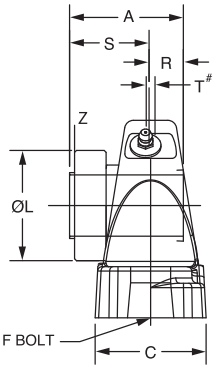

Series	Shaft Size	Complete Unit		Unit without Adapter Sleeve & Lock Nut		Adapter Sleeve & Lock Nut Assembly	
		Part Number	Description	Part Number	Description	Part Number	Description
205	1	**077471**	P2B-GTH-100-E	**065777**	P2B-GTH-05-E	**136524**	AN-GT-05-100-D
	25mm	***065776***	*P2B-GTH-25M-E*			***136554***	*AN-GT-05-25M*-D
206	1-3/16	**130691**	P2B-GTH-103-E	**130697**	P2B-GTH-06-E	**136526**	AN-GT-06-103-D
	1-1/4	**068230**	P2B-GTH-104S-E			**136527**	AN-GT-06-104S-D
	30mm	***068872***	*P2B-GTH-30M-E*			***136555***	*AN-GT-06-30M*-D
207	1-7/16	**130692**	P2B-GTH-107-E	**130698**	P2B-GTH-07-E	**136529**	AN-GT-07-107-D
	35mm	***065598***	*P2B-GTH-35M-E*			***136556***	*AN-GT-07-35M*-D
209	1-11/16	**130693**	P2B-GTH-111-E	**130699**	P2B-GTH-09-E	**136532**	AN-GT-09-111-D
	1 3/4	**@**	P2B-GTH-112-E			**136533**	AN-GT-09-112-D
	45mm	***064874***	*P2B-GTH-45M-E*			***136557***	*AN-GT-09-45M*-D
210	1-15/16	**130694**	P2B-GTH-115-E	**130700**	P2B-GTH-10-E	**136534**	AN-GT-10-115-D
	2	**@**	P2B-GTH-200-E			**136535**	AN-GT-10-200-D
	50mm	***064794***	*P2B-GTH-50M-E*			***136558***	*AN-GT-10-50M*-D
211	2-3/16	**130695**	P2B-GTH-203-E	**130701**	P2B-GTH-11-E	**136536**	AN-GT-11-203-D
	2 1/4	**130689**	P2B-GTH-204-E			**136537**	AN-GT-11-204-D
	55mm	***064875***	*P2B-GTH-55M-E*			***136559***	*AN-GT-11-55M*-D
212	2-7/16	**130696**	P2B-GTH-207-E	**130702**	P2B-GTH-12-E	**136538**	AN-GT-12-207-D
	60mm	*@*	*P2B-GTH-60M-E*			***136594***	*AN-GT-12-60M*-D

Use GTM Medium Duty Pillow Blocks for non-expansion units.
@ Assembled to order

DODGE®



GRIP TIGHT Adapter Ball Bearings
GTH-E EXPANSION PILLOW BLOCKS

Series	Shaft Size	Weight lbs *kg*	A	B	C	D		F Bolt Dia.	G	H	J
						min.	max.				
205	1	3.7	1.46	6.25	1.75	4.25	5.00	1/2	0.94	0.75	3.31
	25mm	*1.7*	*37.1*	*158.8*	*44.5*	*108.0*	*127.0*	*M12*	*23.9*	*19.1*	*84.1*
206	1-3/16	5.0	1.61	6.50	1.75	4.68	5.44	1/2	0.94	0.71	3.75
	1-1/4	5.0									
	30mm	*1.5*	*40.9*	*165.1*	*44.5*	*118.9*	*138.2*	*M12*	*23.9*	*18.0*	*95.3*
207	1-7/16	6.9	1.62	7.25	1.93	5.18	5.88	1/2	0.91	0.93	4.19
	35mm	*2.1*	*41.1*	*184.2*	*49.0*	*131.6*	*149.4*	*M12*	*23.1*	*23.6*	*106.4*
209	1-11/16	9.2	1.85	8.12	2.25	6.00	6.68	5/8	1.02	0.75	4.53
	1-3/4	9.2									
	45mm	*2.8*	*47.0*	*206.2*	*57.2*	*152.4*	*169.7*	*M16*	*25.9*	*19.1*	*115.1*
210	1-15/16	10.8	1.86	8.88	2.30	6.38	7.44	5/8	1.21	0.88	4.96
	2	10.8									
	50mm	*3.3*	*47.2*	*225.6*	*58.4*	*162.1*	*189.0*	*M16*	*30.7*	*22.4*	*126.0*
211	2-3/16	15.7	1.93	9.50	2.37	6.88	7.94	5/8	1.21	0.88	5.40
	2-1/4	15.7									
	55mm	*4.8*	*49.0*	*241.3*	*60.2*	*174.8*	*201.7*	*M16*	*30.7*	*22.4*	*137.2*
212	2-7/16	20.1	2.12	10.75	2.69	7.50	8.50	3/4	1.32	0.94	6.09
	60mm	*6.1*	*53.8*	*273.1*	*68.3*	*190.5*	*215.9*	*M18*	*33.5*	*23.8*	*154.7*

Series	Shaft Size	L	M	R#	S#	T Total Expansion	U	V	W	X @	Z
205	1	1.80	1.69	0.48	0.98	0.16	2.88	5.76	0.56	0.12	1.00
	25mm	*45.7*	*42.9*	*12.2*	*24.9*	*4.1*	*73.2*	*146.3*	*14.2*	*3.0*	*25.4*
206	1-3/16	2.08	1.88	0.52	1.09	0.16	2.91	5.82	0.56	0.12	1.13
	1-1/4										
	30mm	*52.8*	*47.8*	*13.2*	*27.7*	*4.1*	*73.9*	*147.8*	*14.2*	*3.0*	*28.7*
207	1-7/16	2.38	2.13	0.54	1.08	0.16	3.26	6.52	0.69	0.12	1.14
	35mm	*60.5*	*54.1*	*13.7*	*27.4*	*4.1*	*82.8*	*165.6*	*17.5*	*3.0*	*29.0*
209	1-11/16	2.86	2.25	0.62	1.23	0.25	3.69	7.38	0.81	0.12	1.26
	1-3/4										
	45mm	*72.6*	*57.2*	*15.7*	*31.2*	*6.4*	*93.7*	*187.5*	*20.6*	*3.0*	*32.0*
210	1-15/16	3.13	2.50	0.63	1.23	0.22	3.94	7.88	0.81	0.12	1.26
	2										
	50mm	*79.5*	*63.5*	*16.0*	*31.2*	*5.6*	*100.1*	*200.2*	*20.6*	*3.0*	*32.0*
211	2-3/16	3.43	2.75	0.67	1.26	0.22	4.25	8.50	0.88	0.12	1.32
	2-1/4										
	55mm	*87.1*	*69.9*	*17.0*	*32.0*	*5.6*	*108.0*	*215.9*	*22.4*	*3.0*	*33.5*
212	2-7/16	3.69	3.00	0.73	1.39	0.22	4.88	9.76	0.94	0.12	1.46
	60mm	*93.7*	*76.2*	*18.5*	*35.3*	*5.6*	*124.0*	*247.9*	*23.9*	*3.0*	*37.1*

R & S dimensions will vary slightly depending on true shaft diameter.

@ Only 1 pillow block can be dowel pinned per shaft

FEATURES/BENEFITS PAGE B5-2	HOW TO ORDER/NOMENCLATURE PAGE B5-4	SELECTION PAGE B5-5	RELATED PRODUCTS PAGE B5-70

SELECTION/DIMENSIONS

GRIP TIGHT Adapter Ball Bearings
GTM MEDIUM DUTY PILLOW BLOCKS

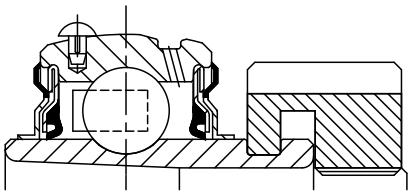

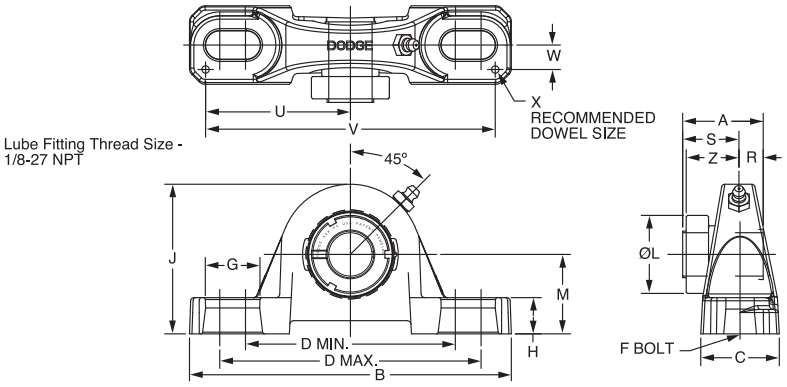

Series	Shaft Size	Complete Unit		Unit Without Adapter & Nut		Adapter & Nut Assembly	
		Part No.	Description	Part No.	Description	Part No.	Description
205	3/4	**129048**	P2B-GTM-012	**129422**	P2B-GT-05	**136597**	AN-GTM-05-012-D
206	1	**129217**	P2B-GTM-100	**129419**	P2B-GTU-06	**136541**	AN-GTM-06-100-D
	25mm	***136258***	*P2B-GTM-25M*			***136561***	*AN-GTM-06-25M*-D
206 (GTMU)	1	**129381**	P2B-GTMU-100	**129385**	P2B-GTMU-06	**136541**	AN-GTM-06-100-D
	25mm	**@**	*P2B-GTMU-25M*			***136561***	*AN-GTM-06-25M*-D
207	1-3/16	**129218**	P2B-GTM-103	**129424**	P2B-GT-07	**136542**	AN-GTM-07-103-D
	1-1/4	**129161**	P2B-GT-104			**136528**	AN-GT-07-104-D
	30mm	***129049***	*P2B-GTM-30M*			***136562***	*AN-GTM-07-30M*-D
208	1-7/16	**129219**	P2B-GTM-107	**129425**	P2B-GT-08	**136543**	AN-GTM-08-107-D
	35mm	***136259***	*P2B-GTM-35M*			***136563***	*AN-GTM-08-35M*-D
209	1-1/2	**129220**	P2B-GTM-108	**129426**	P2B-GT-09	**136598**	AN-GTM-09-108-D
	40mm	***136260***	*P2B-GTM-40M*			***136564***	*AN-GTM-09-40M*-D
210	1-11/16	**129221**	P2B-GTM-111	**129427**	P2B-GT-10	**136544**	AN-GTM-10-111-D
	1-3/4	**129222**	P2B-GTM-112			**136599**	AN-GTM-10-112-D
	45mm	***136261***	*P2B-GTM-45M*			***136565***	*AN-GTM-10-45M*-D
210 (GTMU)	1-11/16	**129383**	P2B-GTMU-111	**129387**	P2B-GTU-10	**136544**	AN-GTM-10-111-D
	1-3/4	**@**	P2B-GTMU-112			**136599**	AN-GTM-10-112-D
	45mm	**@**	*P2B-GTMU-45M*			***136565***	*AN-GTM-10-45M*-D
211	1-15/16	**129223**	P2B-GTM-115	**129428**	P2B-GT-11	**136545**	AN-GTM-11-115-D
	2	**129224**	P2B-GTM-200			**136600**	AN-GTM-11-200-D
	50mm	***136262***	*P2B-GTM-50M*			***136566***	*AN-GTM-11-50M*-D
212	2-3/16	**129225**	P2B-GTM-203	**129429**	P2B-GT-12	**136546**	AN-GTM-12-203-D
	2-1/4	**129226**	P2B-GTM-204			**136601**	AN-GTM-12-204-D
	55mm	***136263***	*P2B-GTM-55M*			***036567***	*AN-GTM-12-55M*-D
214	2-7/16	**129227**	P2B-GTM-207	**129430**	P2B-GT-14	**136547**	AN-GTM-14-207-D
	2-1/2	**129228**	P2B-GTM-208			**136548**	AN-GTM-14-208-D
	60mm	***068071***	*P2B-GTM-60M*			***136602***	*AN-GTM-14-60M*-D
	65mm	***136264***	*P2B-GTM-65M*			***136568***	*AN-GTM-14-65M*-D
215	2-11/16	**129229**	P2B-GTM-211	**129431**	P2B-GT-15	**136549**	AN-GTM-15-211-D
	70mm	***136265***	*P2B-GTM-70M*			***136569***	*AN-GTM-15-70M*-D
216	2-15/16	**129230**	P2B-GTM-215	**129453**	P2B-GT-16	**136550**	AN-GTM-16-215-D
	3	**129231**	P2B-GTM-300			**136551**	AN-GTM-16-300-D
	75mm	***136266***	*P2B-GTM-75M*			***136570***	*AN-GTM-16-75M*-D
218	3-7/16	**129232**	P2B-GTM-307	**129454**	P2B-GT-18	**136552**	AN-GTM-18-307-D
	3-1/2	**129233**	P2B-GTM-308			**136603**	AN-GTM-18-308-D
	85mm	***136267***	*P2B-GTM-85M*			***136571***	*AN-GTM-18-85M*-D

@ Assembled to order

FEATURES/BENEFITS PAGE B5-2 | HOW TO ORDER/NOMENCLATURE PAGE B5-4 | SELECTION PAGE B5-5 | RELATED PRODUCTS PAGE B5-70

DODGE®



GRIP TIGHT Adapter Ball Bearings
GTM MEDIUM DUTY PILLOW BLOCKS

Series	Shaft Size	Weight lbs / kg	A	B	C	D min.	D max.	F Bolt Dia.	G	H	J	L	M	R#	S#	U	V	W	X@	Z
205	3/4	2.4	1.46	5.50	1.40	3.69	4.50	3/8	0.85	0.58	2.77	1.80	1.44	0.48	0.98	2.50	5.00	0.50	0.12	1.00
			37.1	139.7	35.6	93.7	114.3	M10	21.6	14.7	70.4	45.7	36.5	12.2	24.9	63.5	127.0	12.7	3.0	25.4
206	1	4.2	1.61	6.25	1.75	4.25	5.00	1/2	0.94	0.68	3.25	2.08	1.63	0.52	1.09	2.88	5.76	0.56	0.12	1.13
	25mm	*1.7*	*40.9*	*158.8*	*44.5*	*108.0*	*127.0*	*M12*	*23.9*	*17.3*	*82.6*	*52.8*	*41.3*	*13.2*	*27.7*	*73.2*	*146.3*	*14.2*	*3.0*	*28.7*
206 (GTMU)	1	4.2	*1.61*	*6.25*	*1.75*	*4.25*	*5.00*	*1/2*	*0.94*	*0.81*	*3.37*	*2.08*	*1.75*	*0.52*	*1.09*	*2.88*	*5.76*	*0.56*	*0.12*	*1.13*
	25mm	*1.7*	*40.9*	*158.8*	*44.5*	*108.0*	*127.0*	*M12*	*23.9*	*20.6*	*85.6*	*52.8*	*44.5*	*13.2*	*27.7*	*73.2*	*146.3*	*14.2*	*3.0*	*28.7*
207	1-3/16	5.1	*1.62*	*6.50*	*1.75*	*4.68*	*5.44*	*1/2*	*0.94*	*0.71*	*3.75*	*2.38*	*1.88*	*0.54*	*1.08*	*2.91*	*5.82*	*0.56*	*0.12*	*1.14*
	1-1/4	4.9																		
	30mm	*2.2*	*41.1*	*165.1*	*44.5*	*118.9*	*138.2*	*M12*	*23.9*	*18.0*	*95.3*	*60.5*	*47.6*	*13.7*	*27.4*	*73.9*	*147.8*	*14.2*	*3.0*	*29.0*
208	1-7/16	7.2	*1.84*	*7.25*	*1.93*	*5.18*	*5.88*	*1/2*	*0.91*	*0.93*	*4.19*	*2.62*	*2.13*	*0.61*	*1.23*	*3.26*	*6.52*	*0.69*	*0.12*	*1.23*
	35mm	*2.7*	*46.7*	*184.2*	*49.0*	*131.6*	*149.4*	*M12*	*23.1*	*23.6*	*106.4*	*66.5*	*54.0*	*15.5*	*31.2*	*82.8*	*165.6*	*17.5*	*3.0*	*31.2*
209	1-1/2	9.2	*1.85*	*7.44*	*2.00*	*5.50*	*6.19*	*1/2*	*0.90*	*0.75*	*4.28*	*2.86*	*2.13*	*0.62*	*1.23*	*3.38*	*6.76*	*0.69*	*0.12*	*1.26*
	40mm	*3.1*	*47.0*	*189.0*	*50.8*	*139.7*	*157.2*	*M12*	*22.9*	*19.1*	*108.7*	*72.6*	*54.0*	*15.7*	*31.2*	*85.9*	*171.7*	*17.5*	*3.0*	*32.0*
210	1-11/16	10.1	*1.86*	*8.12*	*2.25*	*6.00*	*6.68*	*5/8*	*1.02*	*0.75*	*4.53*	*3.13*	*2.25*	*0.63*	*1.23*	*3.69*	*7.38*	*0.81*	*0.12*	*1.26*
	1-3/4	10.1																		
	45mm	*3.9*	*47.2*	*206.2*	*57.2*	*152.4*	*169.7*	*M16*	*25.9*	*19.1*	*115.1*	*79.5*	*57.2*	*16.0*	*31.2*	*93.7*	*187.5*	*20.6*	*3.0*	*32.0*
210 (GTMU)	1-11/16	10.1	*1.86*	*8.13*	*2.25*	*6.00*	*6.68*	*5/8*	*1.02*	*0.81*	*4.60*	*3.13*	*2.31*	*0.63*	*1.23*	*3.69*	*7.38*	*0.81*	*0.12*	*1.26*
	1-3/4	10.1																		
	45mm	*3.9*	*47.2*	*206.5*	*57.2*	*152.4*	*169.7*	*M16*	*25.9*	*20.6*	*116.8*	*79.5*	*58.7*	*16.0*	*31.2*	*93.7*	*187.5*	*20.6*	*3.0*	*32.0*
211	1-15/16	12.3	1.93	8.88	2.30	6.38	7.44	5/8	1.21	0.88	4.96	3.43	2.50	0.67	1.26	3.94	7.88	0.81	0.12	1.32
	2	12.2																		
	50mm	*5.6*	*49.0*	*225.6*	*58.4*	*162.1*	*189.0*	*M16*	*30.7*	*22.4*	*126.0*	*87.1*	*63.5*	*17.0*	*32.0*	*100.1*	*200.2*	*20.6*	*3.0*	*33.5*
212	2-3/16	17.5	2.12	9.50	2.37	6.88	7.94	5/8	1.21	0.88	5.40	3.69	2.75	0.73	1.39	4.25	8.50	0.88	0.12	1.46
	2-1/4	17.5																		
	55mm	*7.0*	*53.8*	*241.3*	*60.2*	*174.8*	*201.7*	*M16*	*30.7*	*22.4*	*137.2*	*93.7*	*69.9*	*18.5*	*35.3*	*108.0*	*215.9*	*22.4*	*3.0*	*37.1*
214	2-7/16	19.4	2.39	10.75	2.69	7.50	8.50	3/4	1.32	0.94	6.09	4.00	3.00	0.84	1.55	4.88	9.76	0.94	0.12	1.58
	2-1/2	19.4																		
	60mm	*9.0*																		
	65mm	*8.9*	*60.7*	*273.1*	*68.3*	*190.5*	*215.9*	*M18*	*33.5*	*23.9*	*154.7*	*101.6*	*76.2*	*21.3*	*39.4*	*124.0*	*247.9*	*23.9*	*3.0*	*40.1*
215	2-11/16	24.9	2.46	11.75	2.88	8.50	9.50	7/8	1.44	1.00	6.75	4.44	3.50	0.86	1.60	5.48	10.96	1.04	0.12	1.60
	70mm	*10.1*	*62.5*	*298.5*	*73.2*	*215.9*	*241.3*	*M22*	*36.6*	*25.4*	*171.5*	*112.8*	*88.9*	*21.8*	*40.6*	*139.2*	*278.4*	*26.4*	*3.0*	*40.6*
216	2-15/16	25.4	2.70	11.75	3.00	8.50	9.50	7/8	1.44	1.25	6.97	4.69	3.50	0.89	1.81	5.50	11.00	1.09	0.12	1.78
	3																			
	75mm	*10.3*	*68.6*	*298.5*	*76.2*	*215.9*	*241.3*	*M22*	*36.6*	*31.8*	*177.0*	*119.1*	*88.9*	*22.6*	*46.0*	*139.7*	*279.4*	*27.7*	*3.0*	*45.2*
218	3-7/16	34.9	2.80	14.00	3.38	10.32	11.62	7/8	1.59	1.31	8.00	5.19	4.00	0.96	1.84	6.60	13.20	1.19	0.12	1.81
	3-1/2																			
	85mm	*14.1*	*71.1*	*355.6*	*85.9*	*262.1*	*295.1*	*M22*	*40.4*	*33.3*	*203.2*	*131.8*	*101.6*	*24.4*	*46.7*	*167.6*	*335.3*	*30.2*	*3.0*	*46.0*

#R & S dimensions will vary slightly depending on true shaft diameter

@ Only 1 pillow block can be dowel pinned per shaft

FEATURES/BENEFITS PAGE B5-2	HOW TO ORDER/NOMENCLATURE PAGE B5-4	SELECTION PAGE B5-5	RELATED PRODUCTS PAGE B5-70

SELECTION/DIMENSIONS

DODGE®



GRIP TIGHT Adapter Ball Bearings
GTMAH AIR HANDLING MEDIUM DUTY PILLOW BLOCKS

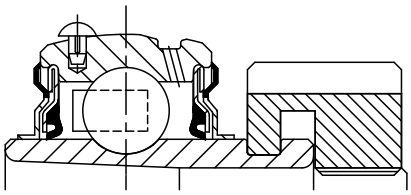

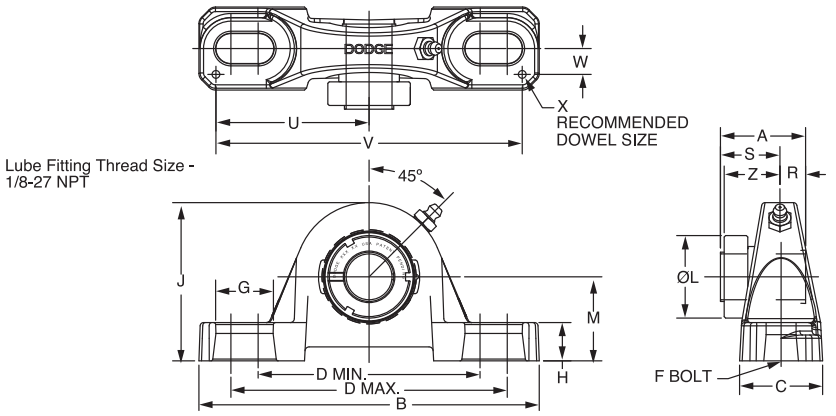

Series	Shaft Size	Complete Unit		Unit Without Adapter & Nut		Adapter & Nut Assembly	
		Part No.	Description	Part No.	Description	Part No.	Description
205	3/4	@	P2B-GTMAH-012	129443	P2B-GTAH-05	136597	AN-GTM-05-012-D
206	1	129234	P2B-GTMAH-100	129452	P2B-GTUAH-06	136541	AN-GTM-06-100-D
	25mm	*@*	*P2B-GTMAH-25M*			***136561***	*AN-GTM-06-25M*-D
206	1	129382	P2B-GTMUAH-100	129386	P2B-GTMUAH-06	136541	AN-GTM-06-100-D
(GTMU)	*25mm*	*@*	*P2B-GTMUAH-25M*			***136561***	*AN-GTM-06-25M*-D
207	1-3/16	129235	P2B-GTMAH-103	129444	P2B-GTAH-07	136542	AN-GTM-07-103-D
	1-1/4	@	P2B-GTAH-104			136528	AN-GT-07-104-D
	30mm	***068871***	*P2B-GTMAH-30M*			***136562***	*AN-GTM-07-30M*-D
208	1-7/16	129236	P2B-GTMAH-107	129445	P2B-GTAH-08	136543	AN-GTM-08-107-D
	35mm	***065597***	*P2B-GTMAH-35M*			***136563***	*AN-GTM-08-35M*-D
209	1-1/2	@	P2B-GTMAH-108	129446	P2B-GTAH-09	136598	AN-GTM-09-108-D
	40mm	***068662***	*P2B-GTMAH-40M*			***136564***	*AN-GTM-09-40M*-D
210	1-11/16	129237	P2B-GTMAH-111	129447	P2B-GTAH-10	136544	AN-GTM-10-111-D
	1-3/4	@	P2B-GTMAH-112			136599	AN-GTM-10-112-D
	45mm	***068680***	*P2B-GTMAH-45M*			***136565***	*AN-GTM-10-45M*-D
210	1-11/16	129384	P2B-GTMUAH-111	129388	P2B-GTUAH-10	136544	AN-GTM-10-111-D
(GTMU)	1-3/4	@	P2B-GTMUAH-112			136599	AN-GTM-10-112-D
	45mm	*@*	*P2B-GTMUAH-45M*			***136565***	*AN-GTM-10-45M*-D
211	1-15/16	129238	P2B-GTMAH-115	129448	P2B-GTAH-11	136545	AN-GTM-11-115-D
	2	@	P2B-GTMAH-200			136600	AN-GTM-11-200-D
	50mm	***065969***	*P2B-GTMAH-50M*			***136566***	*AN-GTM-11-50M*-D
212	2-3/16	129239	P2B-GTMAH-203	129449	P2B-GTAH-12	136546	AN-GTM-12-203-D
	2-1/4	@	P2B-GTMAH-204			136601	AN-GTM-12-204-D
	55mm	***068673***	*P2B-GTMAH-55M*			***136567***	*AN-GTM-12-55M*-D
214	2-7/16	129240	P2B-GTMAH-207	129450	P2B-GTAH-14	136547	AN-GTM-14-207-D
	2-1/2	068865	P2B-GTMAH-208			136548	AN-GTM-14-208-D
	65mm	***068682***	*P2B-GTMAH-65M*			***136568***	*AN-GTM-14-65M*-D
215	2-11/16	129241	P2B-GTMAH-211	129451	P2B-GTAH-15	136549	AN-GTM-15-211-D
	70mm	***064684***	*P2B-GTMAH-70M*			***136569***	*AN-GTM-15-70M*-D
216	2-15/16	129242	P2B-GTMAH-215	129455	P2B-GTAH-16	136550	AN-GTM-16-215-D
	3	068472	P2B-GTMAH-300			136551	AN-GTM-16-300-D
	75mm	***068329***	*P2B-GTMAH-75M*			***136570***	*AN-GTM-16-75M*-D
218	3-7/16	129243	P2B-GTMAH-307	129456	P2B-GTAH-18	136552	AN-GTM-18-307-D
	3-1/2	@	P2B-GTMAH-308			136603	AN-GTM-18-308-D
	85mm	***068686***	*P2B-GTMAH-85M*			***136571***	*AN-GTM-18-85M*-D

@ Assembled to order

FEATURES/BENEFITS PAGE B5-2	HOW TO ORDER/NOMENCLATURE PAGE B5-4	SELECTION PAGE B5-5	RELATED PRODUCTS PAGE B5-70



GRIP TIGHT Adapter Ball Bearings
GTMAH AIR HANDLING MEDIUM DUTY PILLOW BLOCKS

Series	Shaft Size	Weight lbs / kg	A	B	C	D min.	D max.	F Bolt Dia.	G	H	J	L	M	R#	S#	U	V	W	X	Z
205	3/4	2.4	1.46	5.50	1.40	3.69	4.50	3/8	0.85	0.58	2.77	1.80	1.44	0.48	0.98	2.50	5.00	0.50	0.12	1.00
206	1	4.2	1.61	6.25	1.75	4.25	5.00	1/2	0.94	0.68	3.25	2.08	1.63	0.52	1.09	2.88	5.76	0.56	0.12	1.13
	25mm	*1.7*	*40.9*	*158.8*	*44.5*	*108.0*	*127.0*	*M12*	*23.9*	*17.3*	*82.6*	*52.8*	*41.3*	*13.2*	*27.7*	*73.2*	*146.3*	*14.2*	*3.0*	*28.7*
206 (GTMU)	1	4.2	1.61	6.25	1.75	4.25	5.00	1/2	0.94	0.81	3.37	2.08	1.75	0.52	1.09	2.88	5.76	0.56	0.12	1.13
	25mm	*1.7*	*40.9*	*158.8*	*44.5*	*108.0*	*127.0*	*M12*	*23.9*	*20.6*	*85.6*	*52.8*	*44.5*	*13.2*	*27.7*	*73.2*	*146.3*	*14.2*	*3.0*	*28.7*
207	1-3/16 1-1/4	5.1	1.62	6.50	1.75	4.68	5.44	1/2	0.94	0.71	3.75	2.38	1.88	0.54	1.08	2.91	5.82	0.56	0.12	1.14
	30mm	*2.2*	*41.10*	*165.1*	*44.5*	*118.9*	*138.2*	*M12*	*23.9*	*18.0*	*95.3*	*60.5*	*47.6*	*13.7*	*27.4*	*73.9*	*147.8*	*14.2*	*3.0*	*29.0*
208	1-7/16	7.2	1.84	7.25	1.93	5.18	5.88	1/2	0.91	0.93	4.19	2.62	2.13	0.61	1.23	3.26	6.52	0.69	0.12	1.23
	35mm	*2.7*	*46.7*	*184.2*	*49.0*	*131.6*	*149.4*	*M12*	*23.1*	*23.6*	*106.4*	*66.5*	*54.0*	*15.5*	*31.2*	*82.8*	*165.6*	*17.5*	*3.0*	*31.2*
209	1-1/2	9.2	1.85	7.44	2.00	5.50	6.19	1/2	0.90	0.75	4.28	2.86	2.13	0.62	1.23	3.38	6.76	0.69	0.12	1.26
	40mm	*3.1*	*47.0*	*189.0*	*50.8*	*139.7*	*157.2*	*M12*	*22.9*	*19.1*	*108.7*	*72.6*	*54.0*	*15.7*	*31.2*	*85.9*	*171.7*	*17.5*	*3.0*	*32.0*
210	1-11/16 1-3/4	10.1	1.86	8.12	2.25	6.00	6.68	5/8	1.02	0.75	4.53	3.13	2.25	0.63	1.23	3.69	7.38	0.81	0.12	1.26
	45mm	*3.9*	*47.2*	*206.2*	*57.2*	*152.4*	*169.7*	*M16*	*25.9*	*19.1*	*115.1*	*79.5*	*57.2*	*16.0*	*31.2*	*93.7*	*187.5*	*20.6*	*3.0*	*32.0*
210 (GTMU)	1-11/16 1-3/4	10.1	1.86	8.13	2.25	6.00	6.68	5/8	1.02	0.81	4.60	3.13	2.31	0.63	1.23	3.69	7.38	0.81	0.12	1.26
	45mm	*3.9*	*47.2*	*206.5*	*57.2*	*152.4*	*169.7*	*M16*	*25.9*	*20.6*	*116.8*	*79.5*	*58.7*	*16.0*	*31.2*	*93.7*	*187.5*	*20.6*	*3.0*	*32.0*
211	1-15/16 2	12.3	1.93	8.88	2.30	6.38	7.44	5/8	1.21	0.88	4.96	3.43	2.50	0.67	1.26	3.94	7.88	0.81	0.12	1.32
	50mm	*5.6*	*49.0*	*225.6*	*58.4*	*162.1*	*189.0*	*M16*	*30.7*	*22.4*	*126.0*	*87.1*	*63.5*	*17.0*	*32.0*	*100.1*	*200.2*	*20.6*	*3.0*	*33.5*
212	2-3/16 2-1/4	17.5	2.12	9.50	2.37	6.88	7.94	5/8	1.21	0.88	5.40	3.69	2.75	0.73	1.39	4.25	8.50	0.88	0.12	1.46
	55mm	*7.0*	*53.8*	*241.3*	*60.2*	*174.8*	*201.7*	*M16*	*30.7*	*22.4*	*137.2*	*93.7*	*69.9*	*18.5*	*35.3*	*108.0*	*215.9*	*22.4*	*3.0*	*37.1*
214	2-7/16 2-1/2	19.4	2.39	10.75	2.69	7.50	8.50	3/4	1.32	0.94	6.09	4.00	3.00	0.84	1.55	4.88	9.76	0.94	0.12	1.58
	65mm	*8.90*	*60.7*	*273.1*	*68.3*	*190.5*	*215.9*	*M18*	*33.5*	*23.9*	*154.7*	*101.6*	*76.2*	*21.3*	*39.4*	*124.0*	*247.9*	*23.9*	*3.0*	*40.1*
215	2-11/16	24.90	2.46	11.75	2.88	8.50	9.50	7/8	1.44	1.00	6.75	4.44	3.50	0.86	1.60	5.48	10.96	1.04	0.12	1.60
	70mm	*10.10*	*62.5*	*298.5*	*73.2*	*215.9*	*241.3*	*M22*	*36.6*	*25.4*	*171.5*	*112.8*	*88.9*	*21.8*	*40.6*	*139.2*	*278.4*	*26.4*	*3.0*	*40.6*
216	2-15/16 3	25.4	2.70	11.75	3.00	8.50	9.50	7/8	1.44	1.25	6.97	4.69	3.50	0.89	1.81	5.50	11.00	1.09	0.12	1.78
	75mm	*10.3*	*68.6*	*298.5*	*76.2*	*215.9*	*241.3*	*M22*	*36.6*	*31.8*	*177.0*	*119.1*	*88.9*	*22.6*	*46.0*	*139.7*	*279.4*	*27.7*	*3.0*	*45.2*
218	3-7/16 3-1/2	34.9	2.80	14.00	3.38	10.32	11.62	7/8	1.59	1.31	8.00	5.19	4.00	0.96	1.84	6.60	13.20	1.19	0.12	1.81
	85mm	*14.1*	*71.1*	*355.6*	*85.9*	*262.1*	*295.1*	*M22*	*40.4*	*33.3*	*203.2*	*131.8*	*101.6*	*24.4*	*46.7*	*167.6*	*335.3*	*30.2*	*3.0*	*46.0*

#R & S dimensions will vary slightly depending on true shaft diameter

FEATURES/BENEFITS PAGE B5-2 | HOW TO ORDER/NOMENCLATURE PAGE B5-4 | SELECTION PAGE B5-5 | RELATED PRODUCTS PAGE B5-70

SELECTION/DIMENSIONS

DODGE®



GRIP TIGHT Adapter Ball Bearings
GT NORMAL DUTY TAPPED BASE PILLOW BLOCKS

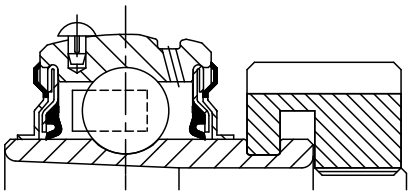

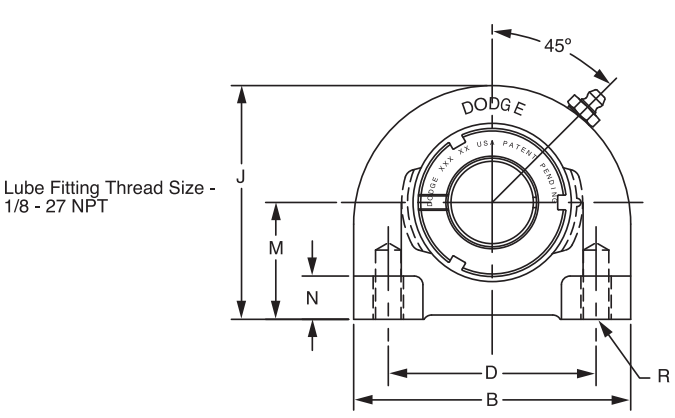

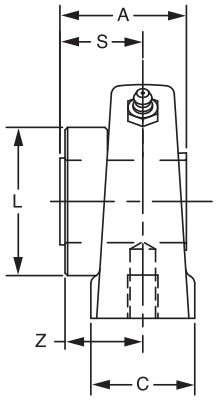

Series	Shaft Size	Complete Unit		Unit without Adapter Sleeve & Lock Nut		Adapter Sleeve & Lock Nut Assembly	
		Part No.	Description	Part No.	Description	Part No.	Description
204	3/4	**129276**	TB-GT-012	**129457**	TB-GT-04	**136522**	AN-GT-04-012-D
	20mm	***136365***	*TB-GT-20M*	***136383***	*TB-GT-04M*	***136553***	*AN-GT-04-20M*-D
205	7/8	**129148**	TB-GT-014			**136590**	AN-GT-05-014-D
	15/16	**129277**	TB-GT-015	**129458**	TB-GT-05	**136523**	AN-GT-05-015-D
	1	**129278**	TB-GT-100			**136524**	AN-GT-05-100-D
	25mm	***136366***	*TB-GT-25M*	***136384***	*TB-GT-05M*	***136554***	*AN-GT-05-25M*-D
206	1-1/8	**129279**	TB-GT-102			**136525**	AN-GT-06-102-D
	1-3/16	**129280**	TB-GT-103	**129459**	TB-GT-06	**136526**	AN-GT-06-103-D
	1-1/4	**129281**	TB-GT-104S			**136527**	AN-GT-06-104S-D
	30mm	***136367***	*TB-GT-30M*	***136385***	*TB-GT-06M*	***136555***	*AN-GT-06-30M*-D
207	1-1/4	**129282**	TB-GT-104			**136528**	AN-GT-07-104-D
	1-3/8	**129283**	TB-GT-106	**129460**	TB-GT-07	**136591**	AN-GT-07-106-D
	1-7/16	**129284**	TB-GT-107			**136529**	AN-GT-07-107-D
	35mm	***136368***	*TB-GT-35M*	***136386***	*TB-GT-07M*	***136556***	*AN-GT-07-35M*-D
208	1-1/2	**129285**	TB-GT-108	**129461**	TB-GT-08	**136530**	AN-GT-08-108-D
	1-5/8	**@**	TB-GT-110			**136592**	AN-GT-08-110-D
	40mm	***136369***	*TB-GT-40M*	***136387***	*TB-GT-08M*	***136593***	*AN-GT-08-40M*-D
209	1-5/8	**129286**	TB-GT-110L			**136531**	AN-GT-09-110L-D
	1-11/16	**129287**	TB-GT-111	**129462**	TB-GT-09	**136532**	AN-GT-09-111-D
	1-3/4	**129288**	TB-GT-112			**136533**	AN-GT-09-112-D
	45mm	***136370***	*TB-GT-45M*	***136388***	*TB-GT-09M*	***136657***	*AN-GT-09-45M*-D
210	1-15/16	**129289**	TB-GT-115	**129463**	TB-GT-10	**136534**	AN-GT-10-115-D
	2	**129290**	TB-GT-200			**136535**	AN-GT-10-200-D
	50mm	***136371***	*TB-GT-50M*	***136389***	*TB-GT-10M*	***136558***	*AN-GT-10-50M*-D

@ Assemble to order

DODGE®



GRIP TIGHT Adapter Ball Bearings
GT NORMAL DUTY TAPPED BASE PILLOW BLOCKS

Series	Shaft Size	Weight lbs *kg*	A	B	C	D	J	L	M	N	R* UNC-Thread	S#	Z
204	3/4	1.9	1.48	2.88	1.50	2.00	2.56	1.50	1.31	0.50	3/8-16	1.02	1.03
	20mm	*0.9*	*37.6*	*73.2*	*38.1*	*50.8*	*65.0*	*38.1*	*33.4*	*12.7*	*M8x1.25*	*25.9*	*26.2*
205	7/8	2.1	1.46	3.00	1.50	2.00	2.81	1.80	1.44	0.50	3/8-16	0.98	1.00
	15/16	2.0											
	1	1.9											
	25mm	*1.0*	*37.1*	*76.2*	*38.1*	*50.8*	*71.4*	*45.7*	*36.5*	*12.7*	*M10x1.5*	*24.9*	*25.4*
206	1-1/8	3.6	1.61	4.00	1.50	3.00	3.38	2.08	1.69	0.63	7/16-14	1.09	1.13
	1-3/16	3.5											
	1-1/4	3.5											
	30mm	*1.7*	*40.9*	*101.6*	*38.1*	*76.2*	*85.9*	*52.8*	*42.9*	*16.0*	*M10x1.5*	*27.7*	*28.7*
207	1-1/4	4.7	1.62	4.25	1.88	3.25	3.75	2.38	1.88	0.75	1/2-13	1.08	1.14
	1-3/8	4.7											
	1-7/16	4.6											
	35mm	*2.30*	*41.1*	*108.0*	*47.8*	*82.6*	*95.3*	*60.5*	*47.6*	*19.1*	*M10x1.5*	*27.4*	*29.0*
208	1-1/2	6.20	1.84	4.63	1.88	3.50	3.94	2.62	1.94	0.75	1/2-13	1.23	1.23
	1-5/8	6.1											
	40mm	*3.0*	*46.7*	*117.6*	*47.8*	*88.9*	*100.1*	*66.5*	*49.2*	*19.1*	*M12x1.75*	*31.2*	*31.2*
209	1-5/8	6.7	1.85	5.00	2.00	3.75	4.25	2.86	2.13	0.75	1/2-13	1.23	1.26
	1-11/16	6.7											
	1-3/4	6.6											
	45mm	*3.2*	*47.0*	*127.0*	*50.8*	*95.3*	*108.0*	*72.6*	*54.0*	*19.1*	*M12x1.75*	*31.2*	*32.0*
210	1-15/16	8.6	1.86	5.50	2.00	4.00	4.63	3.13	2.25	0.88	5/8-11	1.23	1.26
	2	8.5											
	50mm	*4.2*	*47.2*	*139.7*	*50.8*	*101.6*	*117.6*	*79.5*	*57.2*	*22.4*	*M16x2*	*31.2*	*32.0*

#S dimension will vary slightly depending on true shaft diameter

* Mounting surface bolt holes on all GRIP TIGHT Tapped Base Units must have at least 1/16" bolt clearance

SELECTION/DIMENSIONS

DODGE®



GRIP TIGHT Adapter Ball Bearings
GT NORMAL DUTY 2-BOLT FLANGE BEARINGS

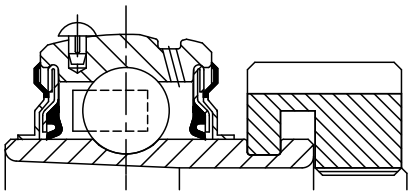

Lube Fitting Thread Size -
203 Series - 1/4 - 28 Tapered Thread
204 Series and Larger - 1/8 - 27 NPT

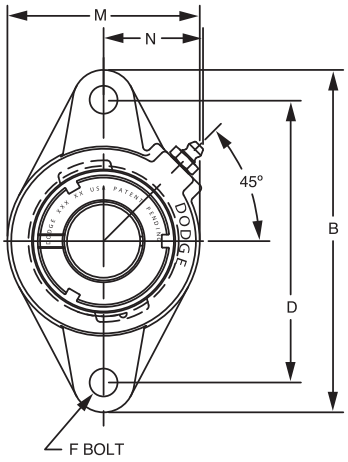

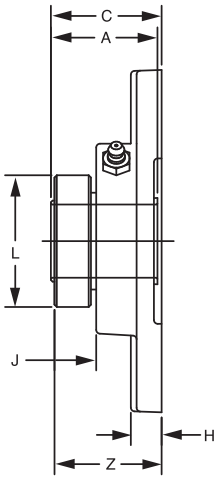

Series	Shaft Size	Complete Unit		Unit without Adapter Sleeve & Lock Nut		Adapter Sleeve & Lock Nut Assembly	
		Part No.	Description	Part No.	Description	Part No.	Description
203	1/2	**129301**	F2B-GT-008	**129490**	F2B-GT-03	**136588**	AN-GT-03-008-D
	5/8	**129302**	F2B-GT-010			**136521**	AN-GT-03-010-D
	17mm	***129321***	*F2B-GT-17M*			***136589***	*AN-GT-03-17M*-D
204	3/4	**129303**	F2B-GT-012	**129491**	F2B-GT-04	**136522**	AN-GT-04-012-D
	20mm	***129322***	*F2B-GT-20M*			***136553***	*AN-GT-04-20M*-D
205	7/8	**129304**	F2B-GT-014	**129492**	F2B-GT-05	**136590**	AN-GT-05-014-D
	15/16	**129305**	F2B-GT-015			**136523**	AN-GT-05-015-D
	1	**129306**	F2B-GT-100			**136524**	AN-GT-05-100-D
	25mm	***129323***	*F2B-GT-25M*			***136554***	*AN-GT-05-25M*-D
206	1-1/8	**129307**	F2B-GT-102	**129493**	F2B-GT-06	**136525**	AN-GT-06-102-D
	1-3/16	**129308**	F2B-GT-103			**136526**	AN-GT-06-103-D
	1-1/4	**129309**	F2B-GT-104S			**136527**	AN-GT-06-104S-D
	30mm	***129324***	*F2B-GT-30M*			***136555***	*AN-GT-06-30M*-D
207	1-1/4	**129310**	F2B-GT-104	**129494**	F2B-GT-07	**136528**	AN-GT-07-104-D
	1-3/8	**129311**	F2B-GT-106			**136591**	AN-GT-07-106-D
	1-7/16	**129312**	F2B-GT-107			**136529**	AN-GT-07-107-D
	35mm	***129325***	*F2B-GT-35M*			***136556***	*AN-GT-07-35M*-D
208	1-1/2	**129313**	F2B-GT-108	**129495**	F2B-GT-08	**136530**	AN-GT-08-108-D
	1-5/8	**129373**	F2B-GT-110			**136592**	AN-GT-01-110-D
	40mm	***129326***	*F2B-GT-40M*			***136593***	*AN-GT-08-40M*-D
209	1-5/8	**129314**	F2B-GT-110L	**129496**	F2B-GT-09	**136531**	AN-GT-09-110L-D
	1-11/16	**129315**	F2B-GT-111			**136532**	AN-GT-09-111-D
	1-3/4	**129316**	F2B-GT-112			**136533**	AN-GT-09-112-D
	45mm	***129327***	*F2B-GT-45M*			***136557***	*AN-GT-09-45M*-D
210	1-15/16	**129317**	F2B-GT-115	**129497**	F2B-GT-10	**136534**	AN-GT-10-115-D
	2	**129318**	F2B-GT-200			**136535**	AN-GT-10-200-D
	50mm	***129328***	*F2B-GT-50M*			***136558***	*AN-GT-10-50M*-D
211	2	**129337**	F2B-GTM-200	**129498**	F2B-GT-11	**136600**	AN-GTM-11-200-D
	2-3/16	**129319**	F2B-GT-203			**136536**	AN-GT-11-203-D
	2-1/4	**129378**	F2B-GT-204			**136537**	AN-GT-11-204-D
	55mm	***129329***	*F2B-GT-55M*			***136559***	*AN-GT-11-55M*-D
212	2-1/4	**064472**	F2B-GTM-204	**129078**	F2B-GT-12	**136601**	AN-GTM-12-204-D
	2-7/16	**064211**	F2B-GT-207			**136538**	AN-GT-12-207-D
	60mm	***068861***	*F2B-GT-60M*			***136594***	*AN-GT-12-60M*-D

@ Assembled to order.

FEATURES/BENEFITS PAGE B5-2 | HOW TO ORDER/NOMENCLATURE PAGE B5-4 | SELECTION PAGE B5-5 | RELATED PRODUCTS PAGE B5-70



GRIP TIGHT Adapter Ball Bearings
GT NORMAL DUTY 2-BOLT FLANGE BEARINGS

Series	Shaft Size	Weight lbs *kg*	A	B	C#	D	F Bolt Dia.	H	J	L	M	N	Z
203	1/2	0.9	1.29	3.88	1.42	3.00	3/8	0.38	0.58	1.40	2.13	1.13	1.43
	5/8	0.8											
	17mm	*0.3*	*32.8*	*98.6*	*36.1*	*76.2*	*M10*	*9.7*	*14.7*	*35.6*	*54.1*	*28.7*	*36.3*
204	3/4	1.7	1.48	4.41	1.63	3.53	3/8	0.50	0.65	1.50	2.38	1.50	1.64
	20mm	*0.6*	*37.6*	*112.0*	*41.4*	*89.7*	*M10*	*12.7*	*16.5*	*38.1*	*60.5*	*38.1*	*41.7*
205	7/8	2.0	1.46	4.88	1.57	3.89	7/16	0.52	0.63	1.80	2.75	1.44	1.59
	15/16	1.9											
	1	1.8											
	25mm	*0.8*	*37.1*	*124.0*	*39.9*	*98.8*	*M10*	*13.2*	*16.0*	*45.7*	*69.9*	*36.6*	*40.4*
206	1-1/8	2.8	1.61	5.56	1.71	4.59	7/16	0.50	0.68	2.08	3.13	1.56	1.74
	1-3/16	2.7											
	1-1/4	2.5											
	30mm	*1.3*	*40.9*	*141.2*	*43.4*	*116.7*	*M12*	*12.7*	*17.3*	*52.8*	*79.5*	*39.6*	*44.2*
207	1-1/4	4.3	1.62	6.13	1.79	5.12	1/2	0.56	0.63	2.38	3.75	1.84	1.85
	1-3/8	4.1											
	1-7/16	3.9											
	35mm	*1.9*	*41.1*	*155.7*	*45.5*	*130.0*	*M12*	*14.2*	*16.0*	*60.5*	*95.3*	*46.7*	*47.0*
208	1-1/2	5.0	1.84	6.75	2.01	5.66	1/2	0.56	0.67	2.62	4.13	1.83	2.02
	1-5/8	4.8											
	40mm	*2.3*	*46.7*	*171.5*	*51.1*	*143.8*	*M12*	*14.2*	*17.0*	*66.5*	*104.9*	*46.5*	*51.3*
209	1-5/8	6.2	1.85	7.06	2.03	5.84	1/2	0.63	0.66	2.86	4.38	1.91	2.06
	1-11/16	6.10											
	1-3/4	6.0											
	45mm	*2.7*	*47.0*	*179.3*	*51.6*	*148.3*	*M14*	*16.0*	*16.8*	*72.6*	*111.3*	*48.5*	*52.3*
210	1-15/16	6.9	1.86	7.44	2.07	6.19	1/2	0.63	0.63	3.13	4.56	2.03	2.10
	2	6.8											
	50mm	*3.2*	*47.2*	*189.0*	*52.6*	*157.2*	*M16*	*16.0*	*16.0*	*79.5*	*115.8*	*51.6*	*53.3*
211	2	8.0	1.93	8.63	2.19	7.25	5/8	0.67	0.65	3.43	5.25	2.27	2.25
	2-3/16	7.9											
	2-1/4	7.8											
	55mm	*3.70*	*49.0*	*219.2*	*55.6*	*184.2*	*M16*	*17.0*	*16.5*	*87.1*	*133.4*	*57.7*	*57.2*
212	2-1/4	9.3	2.12	9.81	2.36	7.96	5/8	0.81	0.71	3.69	5.50	2.47	2.42
	2-7/16	9.2											
	60mm	*4.5*	*53.8*	*249.2*	*59.9*	*202.1*	*M16*	*20.6*	*18.0*	*93.7*	*139.7*	*62.7*	*61.5*

#C dimension will vary slightly depending on true shaft diameter.

FEATURES/BENEFITS PAGE B5-2	HOW TO ORDER/NOMENCLATURE PAGE B5-4	SELECTION PAGE B5-5	RELATED PRODUCTS PAGE B5-70

SELECTION/DIMENSIONS

DODGE®



GRIP TIGHT Adapter Ball Bearings
GTAH AIR HANDLING NORMAL DUTY 2-BOLT FLANGE BEARINGS

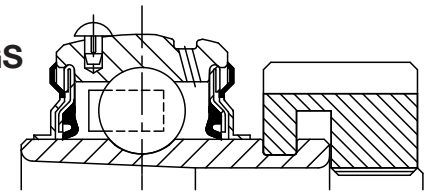

Lube Fitting Thread Size -
203 Series - 1/4 - 28 Tapered Thread
204 Series and Larger - 1/8 - 27 NPT

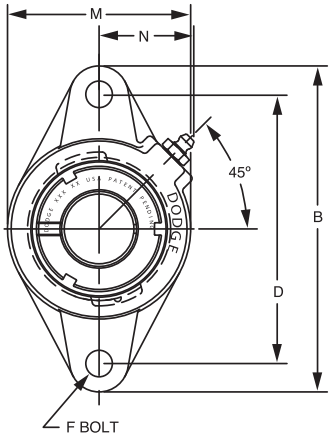

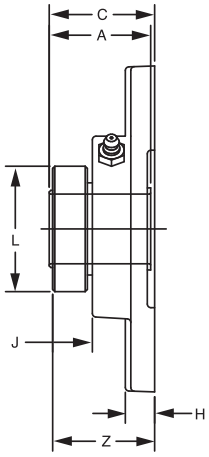

Series	Shaft Size	Complete Unit		Unit without Adapter Sleeve & Lock Nut		Adapter Sleeve & Lock Nut Assembly	
		Part No.	Description	Part No.	Description	Part No.	Description
203	1/2	@	F2B-GTAH-008	129499	F2B-GTAH-03	136588	AN-GT-03-008-D
	5/8	129320	F2B-GTAH-010			136521	AN-GT-03-010-D
	17mm	@	*F2B-GTAH-17M*			***136589***	*AN-GT-03-17M*-D
204	3/4	075221	F2B-GTAH-012	075222	F2B-GTAH-04	136522	AN-GT-04-012-D
	20mm	@	*F2B-GTAH-20M*			***136553***	*AN-GT-04-20M*-D
205	7/8	@	F2B-GTAH-014	073850	F2B-GTAH-05	136590	AN-GT-05-014-D
	15/16	@	F2B-GTAH-015			136523	AN-GT-05-015-D
	1	073849	F2B-GTAH-100			136524	AN-GT-05-100-D
	25mm	@	*F2B-GTAH-25M*			***136554***	*AN-GT-05-25M*-D
206	1-1/8	@	F2B-GTAH-102	064079	F2B-GTAH-06	136525	AN-GT-06-102-D
	1-3/16	073222	F2B-GTAH-103			136526	AN-GT-06-103-D
	1-1/4	@	F2B-GTAH-104S			136527	AN-GT-06-104S-D
	30mm	@	*F2B-GTAH-30M*			***136555***	*AN-GT-06-30M*-D
207	1-1/4	@	F2B-GTAH-104	129500	F2B-GTAH-07	136528	AN-GT-07-104-D
	1-3/8	@	F2B-GTAH-106			136591	AN-GT-07-106-D
	1-7/16	@	F2B-GTAH-107			136529	AN-GT-07-107-D
	35mm	@	*F2B-GTAH-35M*			***136556***	*AN-GT-07-35M*-D
208	1-1/2	@	F2B-GTAH-108	@	F2B-GTAH-08	136530	AN-GT-08-108-D
	1-5/8	@	F2B-GTAH-110			136592	AN-GT-08-110-D
	40mm	@	*F2B-GTAH-40M*			***136593***	*AN-GT-08-40M*-D
209	1-5/8	@	F2B-GTAH-110L	075677	F2B-GTAH-09	136531	AN-GT-09-110L-D
	1-11/16	075676	F2B-GTAH-111			136532	AN-GT-09-111-D
	1-3/4	@	F2B-GTAH-112			136533	AN-GT-09-112-D
	45mm	@	*F2B-GTAH-45M*			***136557***	*AN-GT-09-45M*-D
210	1-15/16	@	F2B-GTAH-115	@	F2B-GTAH-10	136534	AN-GT-10-115-D
	2	@	F2B-GTAH-200			136535	AN-GT-10-200-D
	50mm	@	*F2B-GTAH-50M*			***136558***	*AN-GT-10-50M*-D
211	2	@	F2B-GTMAH-200	@	F2B-GTAH-11	136600	AN-GTM-11-200-D
	2-3/16	@	F2B-GTAH-203			136536	AN-GT-11-203-D
	2-1/4	075222	F2B-GTAH-204			136537	AN-GT-11-204-D
	55mm	@	*F2B-GTAH-55M*			***136559***	*AN-GT-11-55M*-D
212	2-1/4	@	F2B-GTMAH-204	@	F2B-GTAH-12	136601	AN-GTM-12-204-D
	2-7/16	@	F2B-GTAH-207			136538	AN-GT-12-207-D
	60mm	@	*F2B-GTAH-60M*			***136594***	*AN-GT-12-60M*-D

@ Assembled to order.

FEATURES/BENEFITS PAGE B5-2 | HOW TO ORDER/NOMENCLATURE PAGE B5-4 | SELECTION PAGE B5-5 | RELATED PRODUCTS PAGE B5-70

DODGE®



GRIP TIGHT Adapter Ball Bearings
GTAH AIR HANDLING NORMAL DUTY 2-BOLT FLANGE BEARINGS

Series	Shaft Size	Weight lbs *kg*	A	B	C#	D	F Bolt Dia.	H	J	L	M	N	Z
203	1/2 5/8 *17mm*	0.9 0.8 *0.3*	1.29 *32.8*	3.88 *98.6*	1.42 *36.1*	3.00 *76.2*	3/8 *M10*	0.38 *9.7*	0.58 *14.7*	1.40 *35.6*	2.13 *54.1*	1.13 *28.7*	1.43 *36.3*
204	3/4 *20mm*	1.7 *0.6*	1.48 *37.6*	4.41 *112.0*	1.63 *41.4*	3.53 *89.7*	3/8 *M10*	0.50 *12.7*	0.65 *16.5*	1.50 *38.1*	2.38 *60.5*	1.50 *38.1*	1.64 *41.7*
205	7/8 15/16 1 *25mm*	2.0 1.9 1.8 *0.8*	1.46 *37.1*	4.88 *124.0*	1.57 *39.9*	3.89 *98.8*	7/16 *M10*	0.52 *13.2*	0.63 *16.0*	1.80 *45.7*	2.75 *69.9*	1.44 *36.6*	1.59 *40.4*
206	1-1/8 1-3/16 1-1/4 *30mm*	2.8 2.7 2.5 *1.3*	1.61 *40.9*	5.56 *141.2*	1.71 *43.4*	4.59 *116.7*	7/16 *M12*	0.50 *12.7*	0.68 *17.3*	2.08 *52.8*	3.13 *79.5*	1.56 *39.6*	1.74 *44.2*
207	1-1/4 1-3/8 1-7/16 *35mm*	4.3 4.1 3.9 *1.9*	1.62 *41.1*	6.13 *155.7*	1.79 *45.5*	5.12 *130.0*	1/2 *M12*	0.56 *14.2*	0.63 *16.0*	2.38 *60.5*	3.75 *95.3*	1.84 *46.7*	1.85 *47.0*
208	1-1/2 1-5/8 *40mm*	5.0 4.8 *2.3*	1.84 *46.7*	6.75 *171.5*	2.01 *51.1*	5.66 *143.8*	1/2 *M12*	0.56 *14.2*	0.67 *17.0*	2.62 *66.5*	4.13 *104.9*	1.83 *46.5*	2.02 *51.3*
209	1-5/8 1-11/16 1-3/4 *45mm*	6.2 6.1 6.0 *2.7*	1.85 *47.0*	7.06 *179.3*	2.03 *51.6*	5.84 *148.3*	1/2 *M14*	0.63 *16.0*	0.66 *16.8*	2.86 *72.6*	4.38 *111.3*	1.91 *48.5*	2.06 *52.3*
210	1-15/16 2 *50mm*	6.9 6.8 *3.2*	1.86 *47.2*	7.44 *189.0*	2.07 *52.6*	6.19 *157.2*	1/2 *M16*	0.63 *16.0*	0.63 *16.0*	3.13 *79.5*	4.56 *115.8*	2.03 *51.6*	2.10 *53.3*
211	2 2-3/16 2-1/4 *55mm*	8.0 7.9 7.8 *3.7*	1.93 *49.0*	8.63 *219.2*	2.19 *55.6*	7.25 *184.2*	5/8 *M16*	0.67 *17.0*	0.65 *16.5*	3.43 *87.1*	5.25 *133.4*	2.27 *57.7*	2.25 *57.2*
212	2-1/4 2-7/16 *60mm*	9.30 9.2 *4.5*	2.12 *53.8*	9.81 *249.2*	2.36 *59.9*	7.96 *202.1*	5/8 *M16*	0.81 *20.6*	0.71 *18.0*	3.69 *93.7*	5.50 *139.7*	2.47 *62.7*	2.42 *61.5*

#C dimension will vary slightly depending on true shaft diameter.

FEATURES/BENEFITS PAGE B5-2	HOW TO ORDER/NOMENCLATURE PAGE B5-4	SELECTION PAGE B5-5	RELATED PRODUCTS PAGE B5-70

SELECTION/DIMENSIONS

DODGE®

GRIP TIGHT Adapter Ball Bearings
GTM MEDIUM DUTY 2-BOLT FLANGE BEARINGS

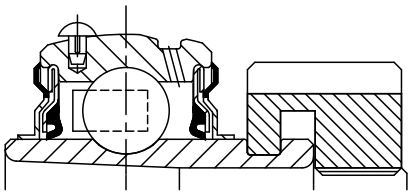

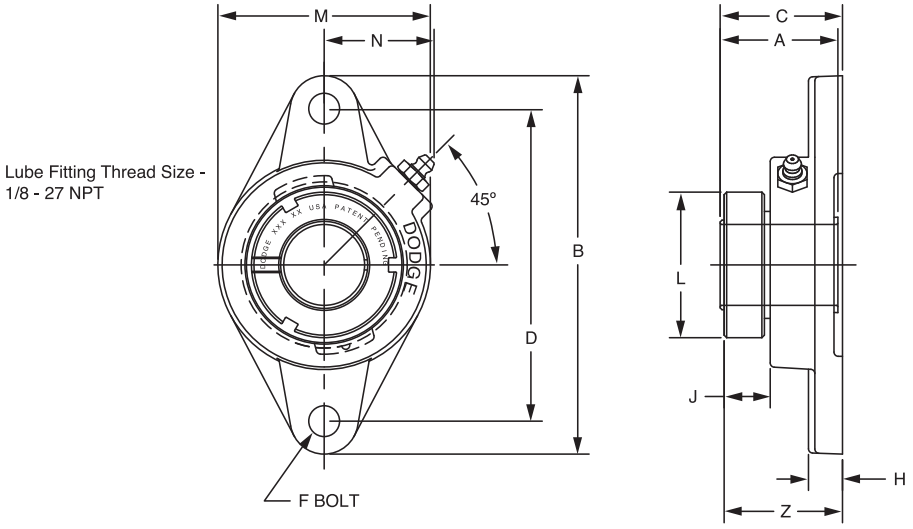

Series	Shaft Size	Complete Unit		Unit without Adapter Sleeve & Lock Nut		Adapter Sleeve & Lock Nut Assembly	
		Part No.	Description	Part No.	Description	Part No.	Description
205	3/4	**129369**	F2B-GTM-012	**129492**	F2B-GT-05	**136597**	AN-GTM-05-012-D
206	1	**129330**	F2B-GTM-100	**129493**	F2B-GT-06	**136541**	AN-GTM-06-100-D
	25mm	***136268***	*F2B-GTM-25M*			***136561***	*AN-GTM-06-25M*-D
207	1-3/16	**129331**	F2B-GTM-103	**129494**	F2B-GT-07	**136542**	AN-GTM-07-103-D
	1-1/4	**129310**	F2B-GT-104			**136528**	AN-GT-07-104-D
	30mm	***136269***	*F2B-GTM-30M*			***136562***	*AN-GTM-07-30M*-D
208	1-7/16	**129332**	F2B-GTM-107	**129495**	F2B-GT-08	**136543**	AN-GTM-08-107-D
	35mm	***136270***	*F2B-GTM-35M*			***136563***	*AN-GTM-08-35M*-D
209	1-1/2	**129333**	F2B-GTM-108	**129496**	F2B-GT-09	**136598**	AN-GTM-09-108-D
	1-5/8	**129314**	F2B-GT-110L			**136531**	AN-GT-09-110L-D
	40mm	***136271***	*F2B-GTM-40M*			***136564***	*AN-GTM-09-40M*-D
210	1-11/16	**129334**	F2B-GTM-111	**129497**	F2B-GT-10	**136544**	AN-GTM-10-111-D
	1-3/4	**129335**	F2B-GTM-112			**136599**	AN-GTM-10-112-D
	45mm	***136272***	*F2B-GTM-405M*			***136565***	*AN-GTM-10-45M*-D
211	1-15/16	**129336**	F2B-GTM-115	**129498**	F2B-GT-11	**136545**	AN-GTM-11-115-D
	2	**129337**	F2B-GTM-200			**136600**	AN-GTM-11-200-D
	50mm	***136273***	*F2B-GTM-50M*			***136566***	*AN-GTM-11-50M*-D
212	2-3/16	**@**	F2B-GTM-203	**129078**	F2B-GT-12	**136546**	AN-GTM-12-203-D
	2-1/4	**064472**	F2B-GTM-204			**136601**	AN-GTM-12-204-D
	55mm	***136274***	*F2B-GTM-55M*			***136567***	*AN-GTM-12-55M*-D

@ Assembled to order.



GRIP TIGHT Adapter Ball Bearings
GTM MEDIUM DUTY 2-BOLT FLANGE BEARINGS

Series	Shaft Size	Weight lbs *kg*	A	B	C#	D	F Bolt Dia.	H	J	L	M	N	Z
205	3/4	2.1	1.46 37.1	4.88 124.0	1.57 39.9	3.89 98.8	7/16 M10	0.52 13.2	0.63 16.0	1.80 45.7	2.75 69.9	1.44 36.6	1.59 40.4
206	1 *25mm*	2.9 *1.4*	1.61 *40.9*	5.56 *141.2*	1.71 *43.4*	4.59 *116.7*	7/16 *M12*	0.50 *12.7*	0.68 *17.3*	2.08 *52.8*	3.13 *79.5*	1.56 *39.6*	1.74 *44.2*
207	1-3/16 1-1/4 *30mm*	4.4 4.3 *2.1*	1.62 *41.1*	6.13 *155.7*	1.79 *45.5*	5.12 *130.0*	1/2 *M12*	0.56 *14.2*	0.63 *16.0*	2.38 *60.5*	3.75 *95.3*	1.84 *46.7*	1.85 *47.0*
208	1-7/16 *35mm*	5.1 *2.5*	1.84 *46.7*	6.75 *171.5*	2.01 *51.1*	5.66 *143.8*	1/2 *M12*	0.56 *14.2*	0.67 *17.0*	2.62 *66.5*	4.13 *104.9*	1.83 *46.5*	2.02 *51.3*
209	1-1/2 1-5/8 *40mm*	6.3 6.2 *3.1*	1.85 *47.0*	7.06 *179.3*	2.03 *51.6*	5.84 *148.3*	1/2 *M14*	0.63 *16.0*	0.66 *16.8*	2.86 *72.6*	4.38 *111.3*	1.91 *48.5*	2.06 *52.3*
210	1-11/16 1-3/4 *45mm*	7.0 6.9 *3.4*	1.86 *47.2*	7.44 *189.0*	2.07 *52.6*	6.19 *157.2*	1/2 *M16*	0.63 *16.0*	0.63 *16.0*	3.13 *79.5*	4.56 *115.8*	2.03 *51.6*	2.10 *53.3*
211	1-15/16 2 *50mm*	8.1 8.0 *3.90*	1.93 *49.0*	8.63 *219.2*	2.19 *55.6*	7.25 *184.2*	5/8 *M16*	0.67 *17.0*	0.65 *16.5*	3.43 *87.1*	5.25 *133.4*	2.27 *57.7*	2.25 *57.2*
212	2-3/16 2-1/4 *55mm*	9.4 9.3 *4.6*	2.12 *53.8*	9.81 *249.2*	2.36 *59.9*	7.96 *202.1*	5/8 *M16*	0.81 *20.6*	0.71 *18.0*	3.69 *93.7*	5.50 *139.7*	2.47 *62.7*	2.42 *61.5*

#C dimension will vary slightly depending on true shaft diameter.

SELECTION/DIMENSIONS

DODGE®



GRIP TIGHT Adapter Ball Bearings
GT LFT NORMAL DUTY 2-BOLT FLANGE BEARINGS

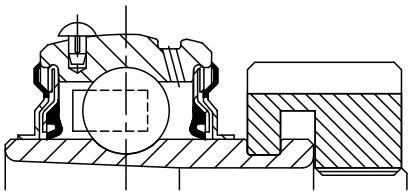

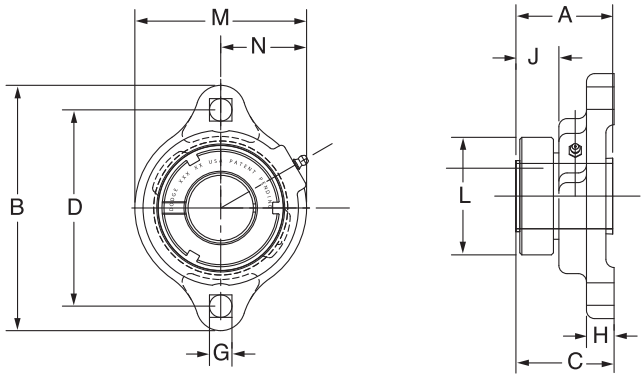

Lube fitting thread size -
203 - 204 Series - 1/4-28 tapered thread
205 - 207 Series - 1/8 - 27 NPT

Series	Shaft Size	Complete Unit		Unit without Adapter & Nut		Adapter & Nut Assembly	
		Part No.	Description	Part No.	Description	Part No.	Description
203	1/2	**136331**	LFT-GT-008	**136355**	LFT-GT-03	**136588**	AN-GT-03-008-D
	5/8	**136332**	LFT-GT-010			**136521**	AN-GT-03-010-D
	17mm	***@***	*LFT-GT-17M*			***136589***	*AN-GT-03-17M*-D
204	3/4	**136333**	LFT-GT-012	**136356**	LFT-GT-04	**136522**	AN-GT-04-012-D
	20mm	***068878***	*LFT-GT-20M*			***136553***	*AN-GT-04-20M*-D
205	7/8	**136334**	LFT-GT-014	**136357**	LFT-GT-05	**136590**	AN-GT-05-014-D
	15/16	**136335**	LFT-GT-015			**136523**	AN-GT-05-015-D
	1	**136336**	LFT-GT-100			**136524**	AN-GT-05-100-D
	25mm	***068685***	*LFT-GT-25M*			***136554***	*AN-GT-05-25M*-D
206	1-1/8	**136337**	LFT-GT-102	**136358**	LFT-GT-06	**136525**	AN-GT-06-102-D
	1-3/16	**136338**	LFT-GT-103			**136526**	AN-GT-06-103-D
	1-1/4	**136339**	LFT-GT-104S			**136527**	AN-GT-06-104S-D
	30mm	***075489***	LFT-GT-30M			***136555***	AN-GT-06-30M-D
207	1-1/4	**136340**	LFT-GT-104	**136359**	LFT-GT-07	**136528**	AN-GT-07-104-D
	1-3/8	**136341**	LFT-GT-106			**136591**	AN-GT-07-106-D
	1-7/16	**136342**	LFT-GT-107			**136529**	AN-GT-07-107-D
	35mm	***@***	*LFT-GT-35M*			***136556***	*AN-GT-07-35M*-D

@ Assembled to order.

Series	Shaft Size	Weight lbs *kg*	A	B	C#	D	G	H	J	L	M	N*
203	1/2	0.70	1.29	3.19	1.30	2.50	0.28	0.38	0.58	1.40	2.13	1.23
	5/8	0.65										
	17mm	*0.31*	*32.8*	*81.0*	*33.0*	*63.5*	*7.1*	*9.7*	*14.7*	*35.6*	*54.1*	*31.2*
204	3/4	0.91	*1.48*	*3.56*	*1.51*	*2.81*	*0.34*	*0.42*	*0.66*	*1.50*	*2.38*	*1.34*
	20mm	*0.40*	*37.6*	*90.4*	*38.4*	*71.4*	*8.6*	*10.7*	*16.8*	*38.1*	*60.5*	*34.0*
205	7/8	1.07	*1.46*	*3.75*	*1.46*	*3.00*	*0.34*	*0.42*	*0.58*	*1.80*	*2.63*	*1.44*
	15/16	1.02										
	1	0.97										
	25mm	*0.43*	*37.1*	*95.3*	*37.1*	*76.2*	*8.6*	*10.7*	*14.7*	*45.7*	*66.8*	*36.6*
206	1-1/8	1.63	1.61	4.44	1.64	3.56	0.41	0.47	0.65	2.08	3.25	1.72
	1-3/16	1.53										
	1-1/4	1.48										
	30mm	*0.67*	*40.9*	*112.8*	*41.7*	*90.4*	*10.4*	*11.9*	*16.5*	*52.8*	*82.6*	*43.7*
207	1-1/4	1.99	*1.62*	*4.82*	*1.63*	*3.94*	*0.41*	*0.50*	*0.57*	*2.38*	*3.50*	*1.83*
	1-3/8	1.89										
	1-7/16	1.84										
	35mm	*0.83*	*41.1*	*122.4*	*41.4*	*100.1*	*10.4*	*12.7*	*14.5*	*60.5*	*88.9*	*46.5*

#C dimension will vary slightly depending on true shaft diameter

FEATURES/BENEFITS PAGE B5-2 | HOW TO ORDER/NOMENCLATURE PAGE B5-4 | SELECTION PAGE B5-5 | RELATED PRODUCTS PAGE B5-70

DODGE®



GRIP TIGHT Adapter Ball Bearings
GT NORMAL DUTY FLANGED BRACKETED BEARINGS

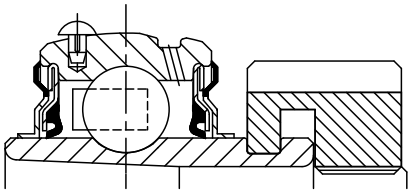

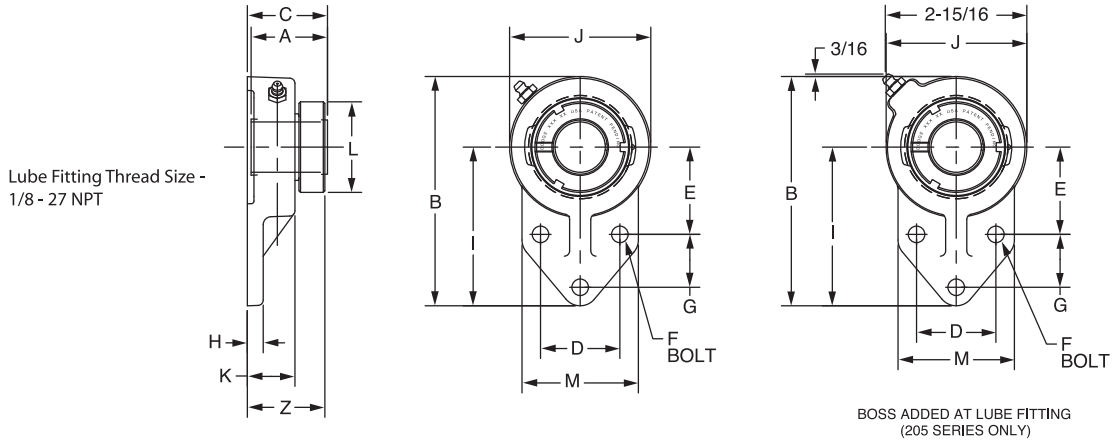

Series	Shaft Size	Complete Unit		Unit without Adapter Sleeve & Lock Nut		Adapter Sleeve & Lock Nut Assembly	
		Part No.	Description	Part No.	Description	Part No.	Description
204	3/4	**129615**	FB-GT-012	**129511**	FB-GT-04	**136522**	AN-GT-04-012-D
205	7/8	**129616**	FB-GT-014	**129512**	FB-GT-05	**136590**	AN-GT-05-014-D
	15/16	**129617**	FB-GT-015			**136523**	AN-GT-05-015-D
	1	**129618**	FB-GT-100			**136524**	AN-GT-05-100-D
206	1-1/8	**129619**	FB-GT-102	**129513**	FB-GT-06	**136525**	AN-GT-06-102-D
	1-3/16	**129620**	FB-GT-103			**136526**	AN-GT-06-103-D
	1-1/4	**129621**	FB-GT-104S			**136527**	AN-GT-06-104S-D
207	1-1/4	**129622**	FB-GT-104	**129514**	FB-GT-07	**136528**	AN-GT-07-104-D
	1-3/8	**129623**	FB-GT-106			**136591**	AN-GT-07-106-D
	1-7/16	**129624**	FB-GT-107			**136529**	AN-GT-07-107-D
210	1-15/16	**129625**	FB-GT-115	**129515**	FB-GT-10	**136534**	AN-GT-10-115-D
	2	**129626**	FB-GT-200			**136535**	AN-GT-10-200-D

Series	Shaft Size	Weight lbs	A	B	C#	D	E	F Bolt Dia.	G	H	I	J	K	L	M	Z
204	3/4	1.3	1.46	4.75	1.71	1.63	1.81	3/8	1.13	0.38	3.38	2.75	1.11	1.80	2.50	1.70
205	7/8 15/16 1	2.3	1.46	4.75	1.71	1.63	1.81	3/8	1.13	0.38	3.38	2.75	1.11	1.80	2.50	1.70
206	1-1/8 1-3/16 1-1/4	3.2 3.2 3.1	1.61	5.38	1.80	1.88	2.06	3/8	1.25	0.38	3.75	3.25	1.13	2.08	2.75	1.83
207	1-1/4 1-3/8 1-7/16	3.4 3.4 3.4	1.62	6.13	1.91	2.00	2.37	1/2	1.25	0.50	4.25	3.75	1.31	2.38	3.25	1.97
210	1-15/16 2	5.7 5.6	1.86	7.50	2.11	2.75	2.94	1/2	1.63	0.50	5.19	4.63	1.50	3.13	4.00	2.14

#C dimension will vary slightly depending on true shaft diameter.

FEATURES/BENEFITS PAGE B5-2	HOW TO ORDER/NOMENCLATURE PAGE B5-4	SELECTION PAGE B5-5	RELATED PRODUCTS PAGE B5-70

SELECTION/DIMENSIONS

DODGE®



GRIP TIGHT Adapter Ball Bearings
GT LF NORMAL DUTY 3-BOLT FLANGE BEARINGS

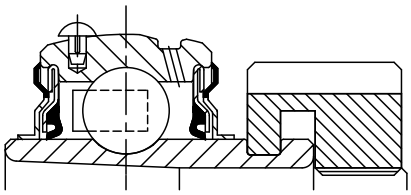

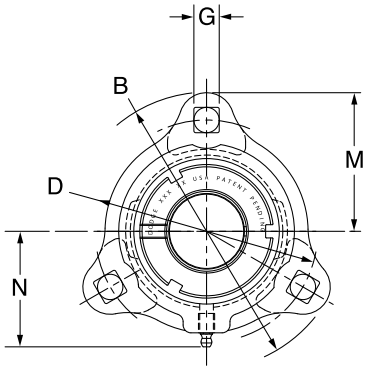

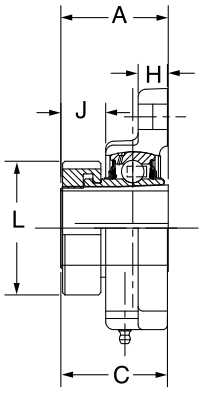

Lube fitting thread size -
203 - 204 Series - 1/4-28 tapered thread
205 - 207 Series - 1/8 - 27 NPT

Series	Shaft Size	Complete Unit		Unit without Adapter Sleeve & Lock Nut		Adapter Sleeve & Lock Nut Assembly	
		Part No.	Description	Part No.	Description	Part No.	Description
203	1/2	**136343**	LF-GT-008	**136360**	LF-GT-03	**136588**	AN-GT-03-008-D
	5/8	**136344**	LF-GT-010			**136521**	AN-GT-03-010-D
	17mm	***@***	*LF-GT-17M*			***136589***	*AN-GT-03-17M*-D
204	3/4	**136345**	LF-GT-012	**136361**	LF-GT-04	**136522**	AN-GT-04-012-D
	20mm	***074017***	*LF-GT-20M*			***136553***	*AN-GT-04-20M*-D
205	7/8	**136346**	LF-GT-014	**136362**	LF-GT-05	**136590**	AN-GT-05-014-D
	15/16	**136347**	LF-GT-015			**136523**	AN-GT-05-015-D
	1	**136348**	LF-GT-100			**136524**	AN-GT-05-100-D
	25mm	***@***	*LF-GT-25M*			***136554***	*AN-GT-05-25M*-D
206	1-1/8	**136349**	LF-GT-102	**136363**	LF-GT-06	**136525**	AN-GT-06-102-D
	1-3/16	**136350**	LF-GT-103			**136526**	AN-GT-06-103-D
	1-1/4	**136351**	LF-GT-104S			**136527**	AN-GT-06-104S-D
	30mm	***@***	*LF-GT-30M*			***136555***	*AN-GT-06-30M*-D
207	1-1/4	**136352**	LF-GT-104	**136364**	LF-GT-07	**136528**	AN-GT-07-104-D
	1-3/8	**136353**	LF-GT-106			**136591**	AN-GT-07-106-D
	1-7/16	**136354**	LF-GT-107			**136529**	AN-GT-07-107-D
	35mm	***@***	*LF-GT-35M*			***136556***	*AN-GT-07-35M*-D

Series	Shaft Size	Weight lbs *kg*	A	B	C#	D	G	H	J	L	M	N*
203	1/2	0.75	1.29	3.19	1.30	2.50	0.28	0.38	0.58	1.40	1.59	1.84
	5/8	0.70										
	17mm	*0.33*	*32.8*	*81.0*	*33.0*	*63.5*	*7.1*	*9.7*	*14.7*	*35.6*	*40.4*	*46.7*
204	3/4	0.95	*1.48*	*3.56*	*1.51*	*2.81*	*0.34*	*0.42*	*0.66*	*1.50*	*1.78*	*1.56*
	20mm	*0.42*	*37.6*	*90.4*	*38.4*	*71.4*	*8.6*	*10.7*	*16.8*	*38.1*	*45.2*	*39.6*
205	7/8	1.22	1.46	3.75	1.46	3.00	0.34	0.42	0.58	1.80	1.88	1.70
	15/16	1.17										
	1	1.12										
	25mm	*0.52*	*37.1*	*95.3*	*37.1*	*76.2*	*8.6*	*10.7*	*14.7*	*45.7*	*47.8*	*43.2*
206	1-1/8	1.78	1.61	4.44	1.64	3.56	0.41	0.47	0.65	2.08	2.22	2.02
	1-3/16	1.68										
	1-1/4	1.63										
	30mm	*0.74*	*40.9*	*112.8*	*41.7*	*90.4*	*10.4*	*11.9*	*16.5*	*52.8*	*56.4*	*51.3*
207	1-1/4	2.24	1.62	4.81	1.63	3.94	0.41	0.50	0.57	2.38	2.41	2.14
	1-3/8	2.14										
	1-7/16	2.09										
	35mm	*0.95*	*41.1*	*122.2*	*41.4*	*100.1*	*10.4*	*12.7*	*14.5*	*60.5*	*61.2*	*54.4*

C dimension will vary slightly depending on true shaft diameter

FEATURES/BENEFITS PAGE B5-2 | HOW TO ORDER/NOMENCLATURE PAGE B5-4 | SELECTION PAGE B5-5 | RELATED PRODUCTS PAGE B5-70

DODGE®



GRIP TIGHT Adapter Ball Bearings
GT NORMAL DUTY 4-BOLT FLANGE BEARINGS

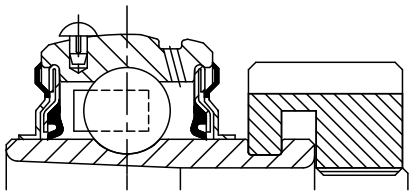

Lube Fitting Thread Size -
203 Series - 1/4-28 Tapered Thread
204 Series and Larger - 1/8-27 NPT

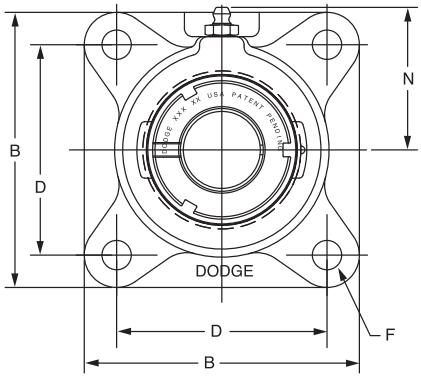

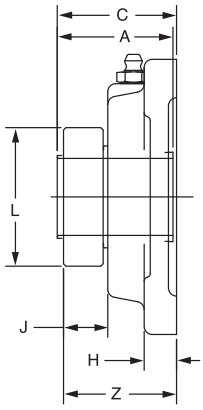

Series	Shaft Size	Complete Unit		Unit without Adapter Sleeve & Lock Nut		Adapter Sleeve & Lock Nut Assembly	
		Part No.	Description	Part No.	Description	Part No.	Description
203	1/2	**129637**	F4B-GT-008	**129464**	F4B-GT-03	**136588**	AN-GT-03-008-D
	5/8	**129638**	F4B-GT-010			**136521**	AN-GT-03-010-D
	17mm	***129667***	*F4B-GT-17M*			***136589***	*AN-GT-03-17M*-D
204	3/4	**129639**	F4B-GT-012	**129465**	F4B-GT-04	**136522**	AN-GT-04-012-D
	20mm	***129668***	*F4B-GT-20M*			***136553***	*AN-GT-04-20M*-D
205	7/8	**129640**	F4B-GT-014	**129466**	F4B-GT-05	**136590**	AN-GT-05-014-D
	15/16	**129641**	F4B-GT-015			**136523**	AN-GT-05-015-D
	1	**129642**	F4B-GT-100			**136524**	AN-GT-05-100-D
	25mm	***129669***	*F4B-GT-25M*			***136554***	*AN-GT-05-25M*-D
206	1-1/8	**129643**	F4B-GT-102	**129467**	F4B-GT-06	**136525**	AN-GT-06-102-D
	1-3/16	**129644**	F4B-GT-103			**136526**	AN-GT-06-103-D
	1-1/4	**129645**	F4B-GT-104S			**136527**	AN-GT-06-104S-D
	30mm	***129670***	*F4B-GT-30M*			***136555***	*AN-GT-06-30M*-D
207	1-1/4	**129646**	F4B-GT-104	**129468**	F4B-GT-07	**136528**	AN-GT-07-104-D
	1-3/8	**129647**	F4B-GT-106			**136591**	AN-GT-07-106-D
	1-7/16	**129648**	F4B-GT-107			**136529**	AN-GT-07-107-D
	35mm	***129671***	*F4B-GT-35M*			***136556***	*AN-GT-07-35M*-D

@Assembled to order

Series	Shaft Size	Weight lbs *kg*	A	B	C#	D	F Bolt Dia.	H	J	L	N	Z
203	1/2	1.4	1.29	3.00	1.42	2.13	3/8	0.44	0.58	1.40	1.69	1.43
	5/8	1.3										
	17mm	*0.6*	*32.8*	*76.2*	*36.1*	*54.0*	*M10*	*11.2*	*14.7*	*35.6*	*42.9*	*36.3*
204	3/4	1.7	1.48	3.38	1.63	2.5	3/8	0.44	0.65	1.50	1.94	1.64
	20mm	*0.8*	*37.6*	*85.9*	*41.4*	*63.5*	*M10*	*11.2*	*16.5*	*38.1*	*49.3*	*41.7*
205	7/8	2.2	1.46	3.75	1.57	2.75	7/16	0.50	0.63	1.80	2.06	1.59
	15/16	2.2										
	1	2.2										
	25mm	*1.0*	*37.1*	*95.3*	*39.9*	*69.9*	*M10*	*12.7*	*16.0*	*45.7*	*52.3*	*40.4*
206	1-1/8	3.8	1.61	4.25	1.71	3.25	7/16	0.50	0.68	2.08	2.19	1.74
	1-3/16	3.7										
	1-1/4	3.7										
	30mm	*1.7*	*40.9*	*108.0*	*43.4*	*82.6*	*M10*	*12.7*	*17.3*	*52.8*	*55.6*	*44.2*
207	1-1/4	4.4	1.62	4.75	1.79	3.63	1/2	0.56	0.63	2.38	2.44	1.85
	1-3/8	4.4										
	1-7/16	4.3										
	35mm	*2.0*	*41.1*	*120.7*	*45.5*	*92.1*	*M12*	*14.2*	*16.0*	*60.5*	*62.0*	*47.0*

#C dimension will vary slightly depending on true shaft diameter.

FEATURES/BENEFITS PAGE B5-2	HOW TO ORDER/NOMENCLATURE PAGE B5-4	SELECTION PAGE B5-5	RELATED PRODUCTS PAGE B5-70

SELECTION/DIMENSIONS

DODGE®



GRIP TIGHT Adapter Ball Bearings
GT NORMAL DUTY 4-BOLT FLANGE BEARINGS

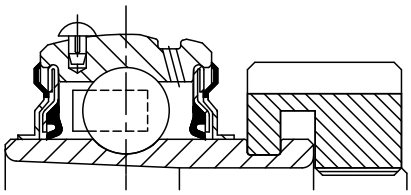

Lube Fitting Thread Size -
203 Series - 1/4-28 Tapered Thread
204 Series and Larger - 1/8-27 NPT

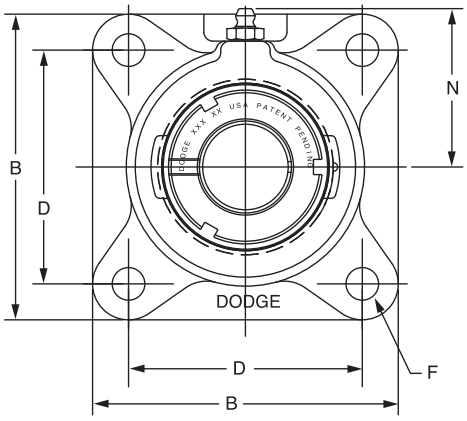

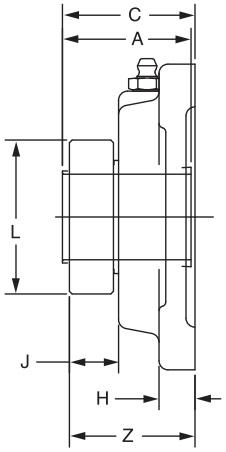

Series	Shaft Size	Complete Unit		Unit without Adapter Sleeve & Lock Nut		Adapter Sleeve & Lock Nut Assembly	
		Part No.	Description	Part No.	Description	Part No.	Description
208	1-1/2	**129649**	F4B-GT-108	**129469**	F4B-GT-08	**136530**	AN-GT-08-108-D
	1-5/8	**129374**	F4B-GT-110			**136592**	AN-GT-08-110-D
	40mm	***129672***	*F4B-GT-40M*			***136593***	*AN-GT-08-40M*-D
209	1-5/8	**129650**	F4B-GT-110L	**129470**	F4B-GT-09	**136531**	AN-GT-09-110L-D
	1-11/16	**129651**	F4B-GT-111			**136532**	AN-GT-09-111-D
	1-3/4	**129652**	F4B-GT-112			**136533**	AN-GT-09-112-D
	45mm	***129673***	*F4B-GT-45M*			***136557***	*AN-GT-09-45M*-D
210	1-15/16	**129653**	F4B-GT-115	**129471**	F4B-GT-10	**136534**	AN-GT-10-115-D
	2	**129654**	F4B-GT-200			**136535**	AN-GT-10-200-D
	50mm	***129674***	*F4B-GT-50M*			***136558***	*AN-GT-10-50M*-D
211	2	**129687**	F4B-GTM-200	**129472**	F4B-GT-11	**136600**	AN-GTM-11-200-D
	2-3/16	**129655**	F4B-GT-203			**136536**	AN-GT-11-203-D
	2-1/4	**129379**	F4B-GT-204			**136537**	AN-GT-11-204-D
	55mm	***129675***	*F4B-GT-55M*			***136559***	*AN-GT-11-55M*-D
212	2-1/4	**129689**	F4B-GTM-204	**129473**	F4B-GT-12	**136601**	AN-GTM-12-204-D
	2-7/16	**129656**	F4B-GT-207			**136538**	AN-GT-12-207-D
	60mm	***129676***	*F4B-GT-60M*			***136594***	*AN-GT-12-60M*-D
214	2-1/2	**129691**	F4B-GTM-208	**129474**	F4B-GT-14	**136548**	AN-GTM-14-208-D
	2-11/16	**129657**	F4B-GT-211			**136539**	AN-GT-14-211-D
	70mm	***129677***	*F4B-GT-70M*			***136560***	*AN-GT-14-70M*-D
215	2-15/16	**129658**	F4B-GT-215	**129475**	F4B-GT-15	**136540**	AN-GT-15-215-D
	3	**075700**	F4B-GT-300			**136595**	AN-GT-15-300-D
	75mm	***129678***	*F4B-GT-75M*			***136596***	*AN-GT-15-75M*-D

@Assembled to order



GRIP TIGHT Adapter Ball Bearings
GT NORMAL DUTY 4-BOLT FLANGE BEARINGS

Series	Shaft Size	Weight lbs *kg*	A	B	C#	D	F Bolt Dia.	H	J	L	N	Z
208	1-1/2 1-5/8 *40mm*	5.8 5.6 *2.6*	1.84 *46.7*	5.13 *130.3*	2.01 *51.1*	4.00 *101.6*	1/2 *M12*	0.56 *14.2*	0.67 *17.0*	2.62 *66.5*	2.38 *60.5*	2.02 *51.3*
209	1-5/8 1-11/16 1-3/4 *45mm*	6.0 6.0 5.9 *2.7*	1.85 *47.0*	5.38 *136.7*	2.03 *51.6*	4.13 *104.8*	1/2 *M12*	0.63 *16.0*	0.66 *16.8*	2.86 *72.6*	2.75 *69.9*	2.06 *52.3*
210	1-15/16 2 *50mm*	6.6 6.5 *3.1*	1.86 *47.2*	5.63 *143.0*	2.07 *52.6*	4.38 *111.1*	1/2 *M12*	0.63 *16.0*	0.63 *16.0*	3.13 *79.5*	2.88 *73.2*	2.10 *53.3*
211	2 2-3/16 2-1/4 *55mm*	10.1 9.7 9.6 *5.0*	1.93 *49.0*	6.50 *165.1*	2.19 *55.6*	5.13 *130.2*	5/8 *M16*	0.69 *17.5*	0.65 *16.5*	3.43 *87.1*	3.25 *82.6*	2.25 *57.2*
212	2-1/4 2-7/16 *60mm*	11.9 11.2 *5.9*	2.12 *53.8*	6.88 *174.8*	2.36 *59.9*	5.63 *142.9*	5/8 *M16*	0.69 *17.5*	0.71 *18.0*	3.69 *93.7*	3.50 *88.9*	2.43 *61.7*
214	2-1/2 2-11/16 *70mm*	15.9 15.4 *6.6*	2.39 *60.7*	7.38 *187.5*	2.85 *72.4*	5.88 *149.2*	5/8 *M16*	0.69 *17.5*	0.70 *17.8*	4.00 *101.6*	3.69 *93.7*	2.89 *73.4*
215	2-15/16 3 *75mm*	16.4 16.2 *8.6*	2.46 *62.5*	7.75 *196.9*	3.02 *76.7*	6.00 *152.4*	3/4 *M18*	1.00 *25.4*	0.77 *19.6*	4.44 *112.8*	3.88 *98.6*	3.02 *76.7*

#C dimension will vary slightly depending on true shaft diameter.

FEATURES/BENEFITS PAGE B5-2	HOW TO ORDER/NOMENCLATURE PAGE B5-4	SELECTION PAGE B5-5	RELATED PRODUCTS PAGE B5-70

SELECTION/DIMENSIONS

GRIP TIGHT Adapter Ball Bearings
GTAH AIR HANDLING NORMAL DUTY 4-BOLT FLANGE BEARINGS

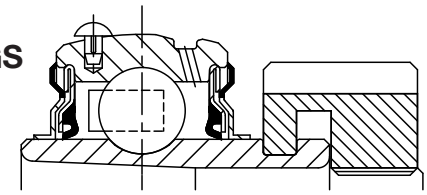

Lube Fitting Thread Size -
203 Series - 1/4-28 Tapered Thread
204 Series and Large - 1/8-27 NPT

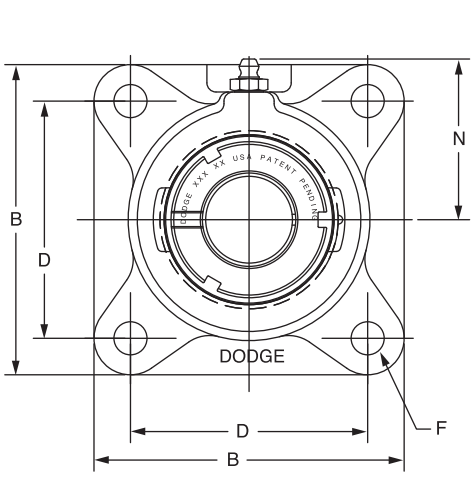

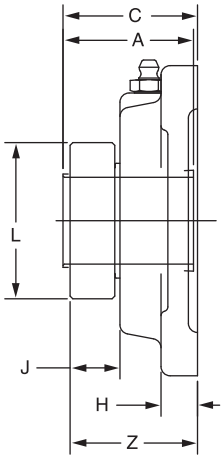

Series	Shaft Size	Complete Unit		Unit without Adapter Sleeve & Lock Nut		Adapter Sleeve & Lock Nut Assembly	
		Part No.	Description	Part No.	Description	Part No.	Description
203	1/2	@	F4B-GTAH-008	@	F4B-GTAH-03	**136588**	AN-GT-03-008-D
	5/8	@	F4B-GTAH-010			**136521**	AN-GT-03-010-D
	17mm	@	*F4B-GTAH-17M*			***136589***	*AN-GT-03-17M*-D
204	3/4	@	F4B-GTAH-012	@	F4B-GTAH-04	**136522**	AN-GT-04-012-D
	20mm	@	*F4B-GTAH-20M*			***136553***	*AN-GT-04-20M*-D
205	7/8	@	F4B-GTAH-014	**129476**	F4B-GTAH-05	**136590**	AN-GT-05-014-D
	15/16	**075679**	F4B-GTAH-015			**136523**	AN-GT-05-015-D
	1	**129659**	F4B-GTAH-100			**136524**	AN-GT-05-100-D
	25mm	@	*F4B-GTAH-25M*			***136554***	*AN-GT-05-25M*-D
206	1-1/8	@	F4B-GTAH-102	**129477**	F4B-GTAH-06	**136525**	AN-GT-06-102-D
	1-3/16	**129660**	F4B-GTAH-103			**136526**	AN-GT-06-103-D
	1-1/4	@	F4B-GTAH-104S			**136527**	AN-GT-06-104S-D
	30mm	@	*F4B-GTAH-30M*			***136555***	*AN-GT-06-30M*-D
207	1-1/4	@	F4B-GTAH-104	**129478**	F4B-GTAH-07	**136528**	AN-GT-07-104-D
	1-3/8	@	F4B-GTAH-106			**136591**	AN-GT-07-106-D
	1-7/16	**129661**	F4B-GTAH-107			**136529**	AN-GT-07-107-D
	35mm	@	*F4B-GTAH-35M*			***136556***	*AN-GT-07-35M*-D

@Assembled to order



GRIP TIGHT Adapter Ball Bearings
GTAH AIR HANDLING NORMAL DUTY 4-BOLT FLANGE BEARINGS

Series	Shaft Size	Weight lbs *kg*	A	B	C#	D	F Bolt Dia.	H	J	L	N	Z
203	1/2	1.4	1.29	3.00	1.42	2.13	3/8	0.44	0.58	1.40	1.69	1.43
	5/8	1.3										
	17mm	*0.6*	*32.8*	*76.2*	*36.1*	*54.0*	*M10*	*11.2*	*14.7*	*35.6*	*42.9*	*36.3*
204	3/4	1.7	1.48	3.38	1.63	2.5	3/8	0.44	0.65	1.50	1.94	1.64
	20mm	*0.8*	*37.6*	*85.9*	*41.4*	*63.5*	*M10*	*11.2*	*16.5*	*38.1*	*49.3*	*41.7*
205	7/8	2.2	1.46	3.75	1.57	2.75	7/16	0.50	0.63	1.80	2.06	1.59
	15/16	2.2										
	1	2.2										
	25mm	*1.0*	*37.1*	*95.3*	*39.9*	*69.9*	*M10*	*12.7*	*16.0*	*45.7*	*52.3*	*40.4*
206	1-1/8	3.8	1.61	4.25	1.71	3.25	7/16	0.50	0.68	2.08	2.19	1.74
	1-3/16	3.7										
	1-1/4	3.7										
	30mm	*1.7*	*40.9*	*108.0*	*43.4*	*82.6*	*M10*	*12.7*	*17.3*	*52.8*	*55.6*	*44.2*
207	1-1/4	4.4	1.62	4.75	1.79	3.63	1/2	0.56	0.63	2.38	2.44	1.85
	1-3/8	4.4										
	1-7/16	4.3										
	35mm	*2.0*	*41.1*	*120.7*	*45.5*	*92.1*	*M12*	*14.2*	*16.0*	*60.5*	*62.0*	*47.0*

#C dimension will vary slightly depending on true shaft diameter.

FEATURES/BENEFITS PAGE B5-2	HOW TO ORDER/NOMENCLATURE PAGE B5-4	SELECTION PAGE B5-5	RELATED PRODUCTS PAGE B5-70

SELECTION/DIMENSIONS

GRIP TIGHT Adapter Ball Bearings
GTAH AIR HANDLING NORMAL DUTY 4-BOLT FLANGE BEARINGS

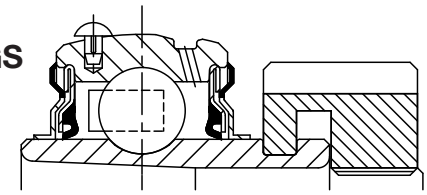

Lube Fitting Thread Size -
203 Series - 1/4-28 Tapered Thread
204 Series and Large - 1/8-27 NPT

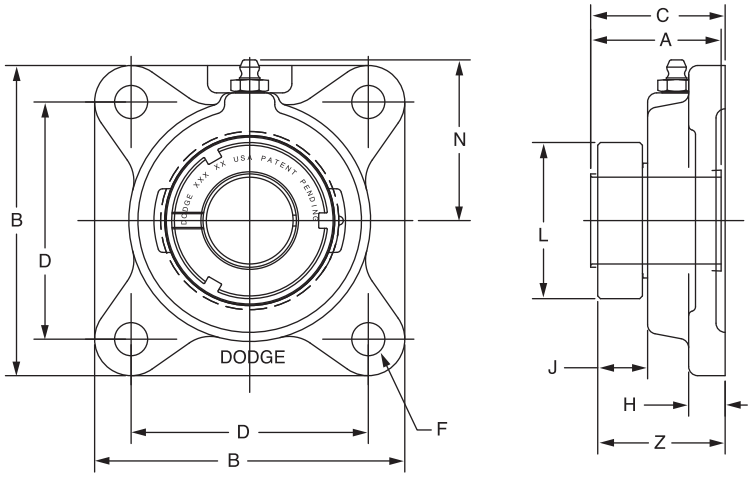

Series	Shaft Size	Complete Unit		Unit without Adapter Sleeve & Lock Nut		Adapter Sleeve & Lock Nut Assembly	
		Part No.	Description	Part No.	Description	Part No.	Description
208	1-1/2	@	F4B-GTAH-108	129479	F4B-GTAH-08	136530	AN-GT-08-108-D
	1-5/8	@	F4B-GTAH-110			136592	AN-GT-08-110-D
	40mm	@	*F4B-GTAH-40M*			***136593***	*AN-GT-08-40M*
209	1-5/8	@	F4B-GTAH-110L	129480	F4B-GTAH-09	136531	AN-GT-09-110L-D
	1-11/16	129662	F4B-GTAH-111			136532	AN-GT-09-111-D
	1-3/4	065607	F4B-GTAH-112			136533	AN-GT-09-112-D
	45mm	@	*F4B-GTAH-45M*			***136557***	*AN-GT-09-45M*-D
210	1-15/16	129663	F4B-GTAH-115	129481	F4B-GTAH-10	136534	AN-GT-10-115-D
	2	@	F4B-GTAH-200			136535	AN-GT-10-200-D
	50mm	***068273***	*F4B-GTAH-50M*			***136558***	*AN-GT-10-50M*-D
211	2	@	F4B-GTMAH-200	129482	F4B-GTAH-11	136600	AN-GTM-11-200-D
	2-3/16	129664	F4B-GTAH-203			136536	AN-GT-11-203-D
	2-1/4	@	F4B-GTAH-204			136537	AN-GT-11-204-D
	55mm	@	*F4B-GTAH-55M*			***136559***	*AN-GT-11-55M*-D
212	2-1/4	@	F4B-GTMAH-204	129483	F4B-GTAH-12	136601	AN-GTM-12-204
	2-7/16	129665	F4B-GTAH-207			136538	AN-GT-12-207-D
	60mm	@	*F4B-GTAH-60M*			***136594***	*AN-GT-12-60M*-D
214	2-1/2	@	F4B-GTMAH-208	129484	F4B-GTAH-14	136547	AN-GTM-14-208-D
	2-11/16	@	F4B-GTAH-211			136548	AN-GT-14-211-D
	70mm	@	*F4B-GTAH-70M*			***136568***	AN-GT-14-70M-D
215	2-15/16	129666	F4B-GTAH-215	129485	F4B-GTAH-15	136540	AN-GT-15-215-D
	3	@	F4B-GTAH-300			136595	AN-GT-15-300-D
	75mm	@	*F4B-GTAH-75M*			***136596***	*AN-GT-15-75M*-D

@Assembled to order

DODGE®



GRIP TIGHT Adapter Ball Bearings
GTAH AIR HANDLING NORMAL DUTY 4-BOLT FLANGE BEARINGS

Series	Shaft Size	Weight lbs *kg*	A	B	C#	D	F Bolt Dia.	H	J	L	N	Z
208	1-1/2	5.8	1.84	5.13	2.01	4.00	1/2	0.56	0.67	2.62	2.38	2.02
	1-5/8	5.6										
	40mm	*2.6*	*46.7*	*130.3*	*51.1*	*101.6*	*M12*	*14.2*	*17.0*	*66.5*	*60.5*	*51.3*
209	1-5/8	6.0	1.85	5.38	2.03	4.13	1/2	0.63	0.66	2.86	2.75	2.06
	1-11/16	6.0										
	1-3/4	5.9										
	45mm	*2.7*	*47.0*	*136.7*	*51.6*	*104.8*	*M14*	*16.0*	*16.8*	*72.6*	*69.9*	*52.3*
210	1-15/16	6.6	1.86	5.63	2.07	4.38	1/2	0.63	0.63	3.13	2.88	2.10
	2	6.5										
	50mm	*3.1*	*47.2*	*143.0*	*52.6*	*111.1*	*M16*	*16.0*	*16.0*	*79.5*	*73.2*	*53.3*
211	2	10.1	1.93	6.50	2.19	5.13	5/8	0.69	0.65	3.43	3.25	2.25
	2-3/16	9.7										
	2-1/4	9.6										
	55mm	*5.0*	*49.0*	*165.1*	*55.6*	*130.2*	*M16*	*17.5*	*16.5*	*87.1*	*82.6*	*57.2*
212	2-1/4	11.9	2.12	6.88	2.36	5.63	5/8	0.69	0.71	3.69	3.50	2.43
	2-7/16	11.2										
	60mm	*5.9*	*53.8*	*174.8*	*59.9*	*142.9*	*M16*	*17.5*	*18.0*	*93.7*	*88.9*	*61.7*
214	2-1/2	15.9	2.39	7.38	2.85	5.88	5/8	0.69	0.70	4.00	3.69	2.89
	2-11/16	15.4										
	70mm	*6.6*	*60.7*	*187.5*	*72.4*	*149.2*	*M16*	*17.5*	*17.8*	*101.6*	*93.7*	*73.4*
215	2-15/16	16.4	2.46	7.75	3.02	6.00	3/4	1.00	0.77	4.44	3.88	3.02
	3	16.2										
	75mm	*8.6*	*62.5*	*196.9*	*76.7*	*152.4*	*M18*	*25.4*	*19.6*	*112.8*	*98.6*	*76.7*

#C dimension will vary slightly depending on true shaft diameter.

FEATURES/BENEFITS PAGE B5-2	HOW TO ORDER/NOMENCLATURE PAGE B5-4	SELECTION PAGE B5-5	RELATED PRODUCTS PAGE B5-70

SELECTION/DIMENSIONS

GRIP TIGHT Adapter Ball Bearings
GTM MEDIUM DUTY 4BOLT FLANGE BEARINGS

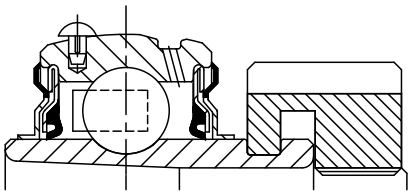

Lube Fitting Thread Size - 1/8 - 27 NPT

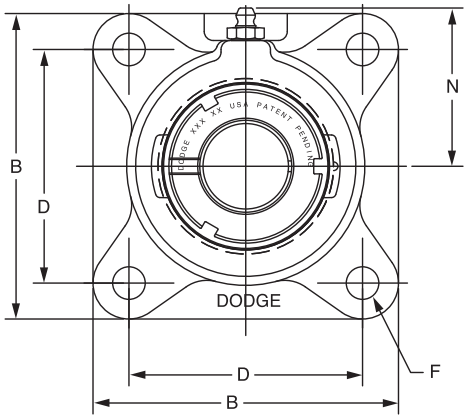

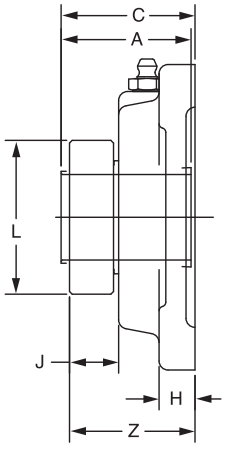

Series	Shaft Size	Complete Unit		Unit without Adapter Sleeve & Lock Nut		Adapter Sleeve & Lock Nut Assembly	
		Part No.	Description	Part No.	Description	Part No.	Description
205	3/4	**129679**	F4B-GTM-012	**129466**	F4B-GT-05	**136597**	AN-GTM-05-012-D
206	1	**129680**	F4B-GTM-100	**129467**	F4B-GT-06	**136541**	AN-GTM-06-100-D
	25mm	***136275***	*F4B-GTM-25M*			***136561***	*AN-GTM-06-25M*-D
207	1-3/16	**129681**	F4B-GTM-103	**129468**	F4B-GT-07	**136542**	AN-GTM-07-103-D
	1-1/4	**129646**	F4B-GT-104			**136528**	AN-GT-07-104-D
	30mm	***136276***	*F4B-GTM-30M*			***136562***	*AN-GTM-07-30M*-D
208	1-7/16	**129682**	F4B-GTM-107	**129469**	F4B-GT-08	**136543**	AN-GTM-08-107-D
	35mm	***136277***	*F4B-GTM-35M*			***136563***	*AN-GTM-08-35M*-D
209	1-1/2	**129683**	F4B-GTM-108	**129470**	F4B-GT-09	**136598**	AN-GTM-09-108-D
	40mm	***136278***	*F4B-GTM-40M*			***136564***	*AN-GTM-09-40M*-D
210	1-11/16	**129684**	F4B-GTM-111	**129471**	F4B-GT-10	**136544**	AN-GTM-10-111-D
	1-3/4	**129685**	F4B-GTM-112			**136599**	AN-GTM-10-112-D
	45mm	***136279***	*F4B-GTM-45M*			***136565***	*AN-GTM-10-45M*-D
211	1-15/16	**129686**	F4B-GTM-115	**129472**	F4B-GT-11	**136545**	AN-GTM-11-115-D
	2	**129687**	F4B-GTM-200			**136600**	AN-GTM-11-200-D
	50mm	***136280***	*F4B-GTM-50M*			***136566***	*AN-GTM-11-50M*-D
212	2-3/16	**129688**	F4B-GTM-203	**129473**	F4B-GT-12	**136546**	AN-GTM-12-203-D
	2-1/4	**129689**	F4B-GTM-204			**136601**	AN-GTM-12-204-D
	55mm	***136281***	*F4B-GTM-55M*			***136567***	*AN-GTM-12-55M*-D
214	2-7/16	**129690**	F4B-GTM-207	**129474**	F4B-GT-14	**136547**	AN-GTM-14-207-D
	2-1/2	**129691**	F4B-GTM-208			**136548**	AN-GTM-14-208-D
	65mm	***136282***	*F4B-GTM-65M*			***136568***	*AN-GTM-14-65M*-D
215	2-11/16	**129692**	F4B-GTM-211	**129475**	F4B-GT-15	**136549**	AN-GTM-15-211-D
	70mm	***136283***	*F4B-GTM-70M*			***136569***	*AN-GTM-15-70M*-D
216	2-15/16	**129693**	F4B-GTM-215	**129486**	F4B-GT-16	**136550**	AN-GTM-16-215-D
	3	**129694**	F4B-GTM-300			**136551**	AN-GTM-16-300-D
	75mm	***136284***	*F4B-GTM-75M*			***136570***	*AN-GTM-16-75M*-D
218	3-7/16	**129695**	F4B-GTM-307	**129487**	F4B-GT-18	**136552**	AN-GTM-18-307-D
	3-1/2	**129696**	F4B-GTM-308			**136603**	AN-GTM-18-308-D
	85mm	***136285***	*F4B-GTM-85M*			***136571***	*AN-GTM-18-85M*-D

@Assembled to order



GRIP TIGHT Adapter Ball Bearings
GTM MEDIUM DUTY 4-BOLT FLANGE BEARINGS

Series	Shaft Size	Weight lbs. kg	A	B	C#	D	F Bolt Dia.	H	J	L	N	Z
205	3/4	2.3	1.46 37.1	3.75 95.3	1.57 39.9	2.75 69.9	7/16 M10	0.50 12.7	0.63 16.0	1.80 45.7	2.06 52.3	1.59 40.4
206	1 *25mm*	3.9 *1.9*	1.61 *40.9*	4.25 *108.0*	1.71 *43.4*	3.25 *82.6*	7/16 *M10*	0.50 *12.7*	0.68 *17.3*	2.08 *52.8*	2.19 *55.6*	1.74 *44.2*
207	1-3/16 1-1/4 *30mm*	4.5 4.4 *2.2*	1.62 *41.1*	4.75 *120.7*	1.79 *45.5*	3.63 *92.1*	1/2 *M12*	0.56 *14.2*	0.63 *16.0*	2.38 *60.5*	2.44 *62.0*	1.85 *47.0*
208	1-7/16 *35mm*	5.9 *2.9*	1.84 *46.7*	5.13 *130.3*	2.01 *51.1*	4.00 *101.6*	1/2 *M12*	0.56 *14.2*	0.67 *17.0*	2.62 *66.5*	2.38 *60.5*	2.02 *51.3*
209	1-1/2 *40mm*	6.1 *3.0*	1.85 *47.0*	5.38 *136.7*	2.03 *51.6*	4.13 *104.8*	1/2 *M12*	0.63 *16.0*	0.66 *16.8*	2.86 *72.6*	2.75 *69.9*	2.06 *52.3*
210	1-11/16 1-3/4 *45mm*	7.1 7.0 *3.4*	1.86 *47.2*	5.63 *143.0*	2.07 *52.6*	4.38 *111.1*	1/2 *M12*	0.63 *16.0*	0.63 *16.0*	3.13 *79.5*	2.88 *73.2*	2.10 *53.3*
211	1-15/16 2 *50mm*	11.1 11.0 *5.4*	1.93 *49.0*	6.50 *165.1*	2.19 *55.6*	5.13 *130.2*	5/8 *M16*	0.69 *17.5*	0.65 *16.5*	3.43 *87.1*	3.25 *82.6*	2.25 *57.2*
212	2-3/16 2-1/4 *55mm*	13.4 13.3 *6.5*	2.12 *53.8*	6.88 *174.8*	2.36 *59.9*	5.63 *142.9*	5/8 *M16*	0.69 *17.5*	0.71 *18.0*	3.69 *93.7*	3.50 *88.9*	2.43 *61.7*
214	2-7/16 2-1/2 *65mm*	14.7 14.6 *7.1*	2.39 *60.7*	7.38 *187.5*	2.85 *72.4*	5.88 *149.2*	5/8 *M16*	0.69 *17.5*	0.70 *17.8*	4.00 *101.6*	3.69 *93.7*	2.89 *73.4*
215	2-11/16 *70mm*	19.0 *9.2*	2.46 *62.5*	7.75 *196.9*	3.02 *76.7*	6.00 *152.4*	3/4 *M18*	1.00 *25.4*	0.77 *19.6*	4.44 *112.8*	3.88 *98.6*	3.02 *76.7*
216	2-15/16 3 *75mm*	20.70 20.6 *10.0*	2.70 *68.6*	7.75 *196.9*	3.40 *86.4*	6.00 *152.4*	3/4 *M18*	0.88 *22.4*	0.87 *22.1*	4.69 *119.1*	4.09 *103.9*	3.37 *85.6*
218	3-7/16 3-1/2 *85mm*	36.1 *17.5*	2.80 *71.1*	8.44 *214.4*	3.62 *91.9*	6.75 *171.5*	3/4 *M18*	1.00 *25.4*	0.81 *20.6*	5.19 *131.8*	4.63 *117.6*	3.59 *91.2*

#C dimension will vary slightly depending on true shaft diameter.

FEATURES/BENEFITS PAGE B5-2 | HOW TO ORDER/NOMENCLATURE PAGE B5-4 | SELECTION PAGE B5-5 | RELATED PRODUCTS PAGE B5-70

SELECTION/DIMENSIONS

GRIP TIGHT Adapter Ball Bearings
GTMAH AIR HANDLING MEDIUM DUTY 4-BOLT FLANGE BEARINGS

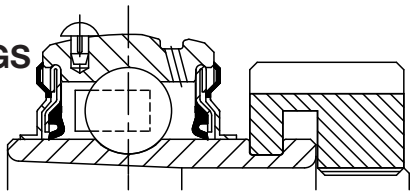

Lube Fitting Thread Size - 1/8 - 27 NPT

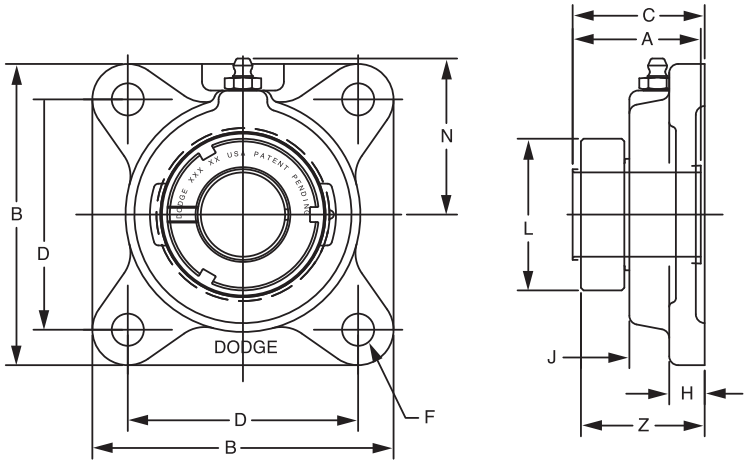

Series	Shaft Size	Complete Unit		Unit without Adapter Sleeve & Lock Nut		Adapter Sleeve & Lock Nut Assembly	
		Part No.	Description	Part No.	Description	Part No.	Description
205	3/4	@	F4B-GTMAH-012	**129476**	F4B-GTAH-05	**136597**	AN-GTM-05-012-D
206	1	**129697**	F4B-GTMAH-100	**129477**	F4B-GTAH-06	**136541**	AN-GTM-06-100-D
	25mm	@	*F4B-GTMAH-25M*			***136561***	*AN-GTM-06-25M*-D
207	1-3/16	**129698**	F4B-GTMAH-103	**129478**	F4B-GTAH-07	**136542**	AN-GTM-07-103-D
	1-1/4	@	F4B-GTAH-104			**136528**	AN-GT-07-104-D
	30mm	@	*F4B-GTMAH-30M*			***136562***	*AN-GTM-07-30M*-D
208	1-7/16	**129699**	F4B-GTMAH-107	**129479**	F4B-GTAH-08	**136543**	AN-GTM-08-107-D
	35mm	@	*F4B-GTMAH-35M*			***136563***	*AN-GTM-08-35M*-D
209	1-1/2	**075313**	F4B-GTMAH-108	**129480**	F4B-GTAH-09	**136598**	AN-GTM-09-108-D
	40mm	@	*F4B-GTMAH-40M*			***136564***	*AN-GTM-09-40M*-D
210	1-11/16	**064670**	F4B-GTMAH-111	**129481**	F4B-GTAH-10	**136544**	AN-GTM-10-111-D
	1-3/4	@	F4B-GTMAH-112			**136599**	AN-GTM-10-112-D
	45mm	@	*F4B-GTMAH-45M*			***136565***	*AN-GTM-10-45M*-D
211	1-15/16	**129700**	F4B-GTMAH-115	**129482**	F4B-GTAH-11	**136545**	AN-GTM-11-115-D
	2	@	F4B-GTMAH-200			**136600**	AN-GTM-11-200-D
	50mm	@	*F4B-GTMAH-50M*			***136566***	*AN-GTM-11-50M*-D
212	2-3/16	**129701**	F4B-GTMAH-203	**129483**	F4B-GTAH-12	**136546**	AN-GTM-12-203-D
	2-1/4	@	F4B-GTMAH-204			**136601**	AN-GTM-12-204-D
	55mm	@	*F4B-GTMAH-55M*			***136567***	*AN-GTM-12-55M*-D
214	2-7/16	**129702**	F4B-GTMAH-207	**129484**	F4B-GTAH-14	**136547**	AN-GTM-14-207-D
	2-1/2	**075792**	F4B-GTMAH-208			**136548**	AN-GTM-14-208-D
	65mm	@	*F4B-GTMAH-65M*			***136568***	*AN-GTM-14-65M*-D
215	2-11/16	@	F4B-GTMAH-211	**129485**	F4B-GTAH-15	**136549**	AN-GTM-11-211-D
	70mm	@	*F4B-GTMAH-70M*			***136569***	*AN-GTM-11-70M*-D
216	2-15/16	**129703**	F4B-GTMAH-215	**129488**	F4B-GTAH-16	**136550**	AN-GTM-16-215-D
	3	**075314**	F4B-GTMAH-300			**136551**	AN-GTM-16-300-D
	75mm	@	*F4B-GTMAH-75M*			***136570***	*AN-GTM-16-75M*-D
218	3-7/16	**129704**	F4B-GTMAH-307	**129489**	F4B-GTAH-18	**136552**	AN-GTM-18-307-D
	3-1/2	@	F4B-GTMAH-308			**136603**	AN-GTM-18-308-D
	85mm	@	*F4B-GTMAH-85M*			***136571***	*AN-GTM-18-85M*-D

@Assembled to order

FEATURES/BENEFITS PAGE B5-2 | HOW TO ORDER/NOMENCLATURE PAGE B5-4 | SELECTION PAGE B5-5 | RELATED PRODUCTS PAGE B5-70

DODGE®



GRIP TIGHT Adapter Ball Bearings
GTMAH AIR HANDLING MEDIUM DUTY 4-BOLT FLANGE BEARINGS

Series	Shaft Size	Weight lbs. *kg*	A	B	C#	D	F Bolt Dia.	H	J	L	N	Z
205	3/4	2.3	1.46	3.75	1.57	2.75	7/16	0.50	0.63	1.80	2.06	1.59
			37.1	95.3	39.9	69.9	M10	12.7	16.0	45.7	52.3	40.4
206	1	3.9	1.61	4.25	1.71	3.25	7/16	0.50	0.68	2.08	2.19	1.74
	25mm	*1.9*	*40.9*	*108.0*	*43.4*	*82.6*	*M10*	*12.7*	*17.3*	*52.8*	*55.6*	*44.2*
207	1-3/16 1-1/4	4.5 4.4	1.62	4.75	1.79	3.63	1/2	0.56	0.63	2.38	2.44	1.85
	30mm	*2.2*	*41.1*	*120.7*	*45.5*	*92.1*	*M12*	*14.2*	*16.0*	*60.5*	*62.0*	*47.0*
208	1-7/16	5.9	1.84	5.13	2.01	4.00	1/2	0.56	0.67	2.62	2.38	2.02
	35mm	*2.9*	*46.7*	*130.3*	*51.1*	*101.6*	*M12*	*14.2*	*17.0*	*66.5*	*60.5*	*51.3*
209	1-1/2	6.1	1.85	5.38	2.03	4.13	1/2	0.63	0.66	2.86	2.75	2.06
	40mm	*3.0*	*47.0*	*136.7*	*51.6*	*104.8*	*M14*	*16.0*	*16.8*	*72.6*	*69.9*	*52.3*
210	1-11/16 1-3/4	7.1 7.0	1.86	5.63	2.07	4.38	1/2	0.63	0.63	3.13	2.88	2.10
	45mm	*3.4*	*47.2*	*143.0*	*52.6*	*111.1*	*M16*	*16.0*	*16.0*	*79.5*	*73.2*	*53.3*
211	1-15/16 2	11.1 11.0	1.93	6.50	2.19	5.13	5/8	0.69	0.65	3.43	3.25	2.25
	50mm	*5.4*	*49.0*	*165.1*	*55.6*	*130.2*	*M16*	*17.5*	*16.5*	*87.1*	*82.6*	*57.2*
212	2-3/16 2-1/4	13.4 13.3	2.12	6.88	2.36	5.63	5/8	0.69	0.71	3.69	3.50	2.43
	55mm	*6.5*	*53.8*	*174.8*	*59.9*	*142.9*	*M16*	*17.5*	*18.0*	*93.7*	*88.9*	*61.7*
214	2-7/16 2-1/2	14.7 14.6	2.39	7.38	2.85	5.88	5/8	0.69	0.70	4.00	3.69	2.89
	65mm	*7.1*	*60.7*	*187.5*	*72.4*	*149.2*	*M16*	*17.5*	*17.8*	*101.6*	*93.7*	*73.4*
215	2-11/16	19.0	2.46	7.75	3.02	6.00	3/4	1.00	0.77	4.44	3.88	3.02
	70mm	*9.2*	*62.5*	*196.9*	*76.7*	*152.4*	*M18*	*25.4*	*19.6*	*112.8*	*98.6*	*76.7*
216	2-15/16 3	20.7 20.6	2.70	7.75	3.40	6.00	3/4	0.88	0.87	4.69	4.09	3.37
	75mm	*10.0*	*68.6*	*196.9*	*86.4*	*152.4*	*M18*	*22.4*	*22.1*	*119.1*	*103.9*	*85.6*
218	3-7/16 3-1/2	36.1 17.5	2.80	8.44	3.62	6.75	3/4	1.00	0.81	5.19	4.63	3.59
	85mm		*71.1*	*214.4*	*91.9*	*171.5*	*M18*	*25.4*	*20.6*	*131.8*	*117.6*	*91.2*

#C dimension will vary slightly depending on true shaft diameter.

FEATURES/BENEFITS PAGE B5-2	HOW TO ORDER/NOMENCLATURE PAGE B5-4	SELECTION PAGE B5-5	RELATED PRODUCTS PAGE B5-70

SELECTION/DIMENSIONS

GRIP TIGHT Adapter Ball Bearings
GT NORMAL DUTY PILOTED FLANGE BEARINGS

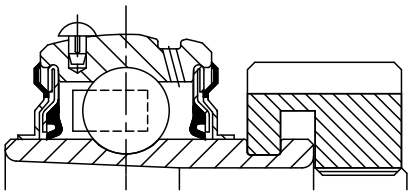

Lube Fitting Thread Size - 1/8 - 27 NPT

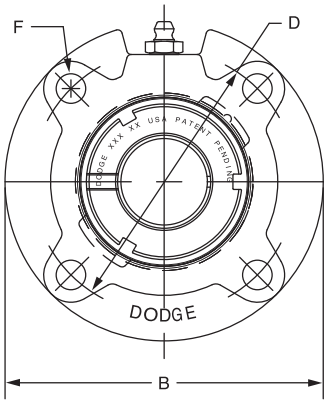

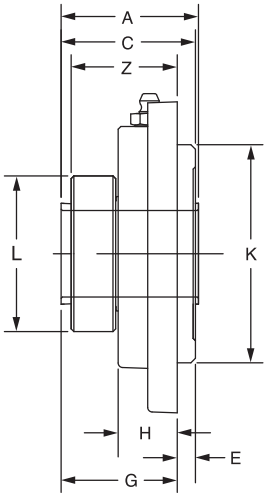

Series	Shaft Size	Complete Unit		Unit without Adapter Sleeve & Lock Nut		Adapter Sleeve & Lock Nut Assembly	
		Part No.	Description	Part No.	Description	Part No.	Description
206	1-1/8	**129735**	FC-GT-102	**129501**	FC-GT-06	**136525**	AN-GT-06-102-D
	1-3/16	**129736**	FC-GT-103			**136526**	AN-GT-06-103-D
	1-1/4	**129737**	FC-GT-104S			**136527**	AN-GT-06-104S-D
	30mm	***129750***	*FC-GT-30M*			***136555***	*AN-GT-06-30M*-D
207	1-1/4	**129738**	FC-GT-104	**129502**	FC-GT-07	**136528**	AN-GT-07-104-D
	1-3/8	**129739**	FC-GT-106			**136591**	AN-GT-07-106-D
	1-7/16	**129740**	FC-GT-107			**136529**	AN-GT-07-107-D
	35mm	***129751***	*FC-GT-35M*			***136556***	*AN-GT-07-35M*-D
208	1-1/2	**129741**	FC-GT-108	**129503**	FC-GT-08	**136530**	AN-GT-08-108-D
	1-5/8	**129375**	FC-GT-110			**136592**	AN-GT-08-110-D
	40mm	***129752***	*FC-GT-40M*			***136593***	*AN-GT-08-40M*-D
209	1-5/8	**129742**	FC-GT-110L	**129504**	FC-GT-09	**136531**	AN-GT-09-110L-D
	1-11/16	**129743**	FC-GT-111			**136532**	AN-GT-09-111-D
	1-3/4	**129744**	FC-GT-112			**136533**	AN-GT-09-112-D
	45mm	***129753***	*FC-GT-45M*			***136557***	*AN-GT-09-45M*-D
210	1-15/16	**129745**	FC-GT-115	**129505**	FC-GT-10	**136534**	AN-GT-10-115-D
	2	**129746**	FC-GT-200			**136535**	AN-GT-10-200-D
	50mm	***129754***	*FC-GT-50M*			***136558***	*AN-GT-10-50M*-D
211	2	**129765**	FC-GTM-200	**129506**	FC-GT-11	**136600**	AN-GTM-11-200-D
	2-3/16	**129747**	FC-GT-203			**136536**	AN-GT-11-203-D
	2-1/4	**129380**	FC-GT-204			**136537**	AN-GT-11-204-D
	55mm	***129755***	*FC-GT-55M*			***136559***	*AN-GT-11-55M*-D
212	2-1/4	**129767**	FC-GTM-204	**129507**	FC-GT-12	**136601**	AN-GTM-12-204-D
	2-7/16	**129748**	FC-GT-207			**136538**	AN-GT-12-207-D
	60mm	***129756***	*FC-GT-60M*			***136594***	*AN-GT-12-60M*-D
214	2-1/2	**129769**	FC-GTM-208	**129508**	FC-GT-14	**136548**	AN-GTM-14-208-D
	2-11/16	**129749**	FC-GT-211			**136539**	AN-GT-14-211-D
	70mm	***129757***	*FC-GT-70M*			***136560***	*AN-GT-14-70M*-D



GRIP TIGHT Adapter Ball Bearings
GT NORMAL DUTY PILOTED FLANGE BEARINGS

Series	Shaft Size	Weight lbs *kg*	A	B	C#	D	E	F Bolt Dia.	G#	H	K	L	Z
206	1-1/8	3.0	1.61	4.38	1.68	3.63	0.25	3/8	1.43	0.81	3.000/2.998	2.08	1.46
	1-3/16	3.0											
	1-1/4	3.0											
	30mm	*1.4*	*40.9*	*111.3*	*42.7*	*92.2*	*6.4*	*M10*	*36.3*	*20.6*	*76.20/76.15*	*52.8*	*37.1*
207	1-1/4	4.1	1.62	5.00	1.81	4.13	0.38	3/8	1.44	0.84	3.375/3.373	2.38	1.49
	1-3/8	4.0											
	1-7/16	4.0											
	35mm	*1.6*	*41.1*	*127.0*	*46.0*	*104.9*	*9.7*	*M10*	*36.6*	*21.3*	*85.73/85.67*	*60.5*	*37.8*
208	1-1/2	4.9	1.84	5.25	2.01	4.38	0.44	7/16	1.58	0.89	3.625/3.623	2.62	1.58
	1-5/8	4.7											
	40mm	*2.1*	*46.7*	*133.4*	*51.1*	*111.3*	*11.2*	*M12*	*40.1*	*22.6*	*92.08/92.02*	*66.5*	*40.1*
209	1-5/8	6.2	1.85	5.75	1.97	4.75	0.44	1/2	1.53	0.91	4.000/3.998	2.86	1.57
	1-11/16	6.1											
	1-3/4	6.1											
	45mm	*2.50*	*47.0*	*146.1*	*50.0*	*120.7*	*11.2*	*M12*	*38.9*	*23.1*	*101.60/101.55*	*72.6*	*39.9*
210	1-15/16	6.2	1.86	6.13	2.02	5.13	0.47	1/2	1.55	0.92	4.250/4.248	3.13	1.58
	2	6.2											
	50mm	*2.6*	*47.2*	*155.7*	*51.3*	*130.3*	*11.9*	*M12*	*39.4*	*23.4*	*107.95/107.90*	*79.5*	*40.1*
211	2	8.0	1.93	6.38	2.26	5.38	0.63	1/2	1.63	1.00	4.500/4.498	3.43	1.69
	2-3/16	8.0											
	2-1/4	6.9											
	55mm	*3.4*	*49.0*	*162.1*	*57.4*	*136.7*	*16.0*	*M12*	*41.4*	*25.4*	*114.30/114.25*	*87.1*	*42.9*
212	2-1/4	11.6	2.12	7.13	2.52	6.00	0.88	1/2	1.65	1.00	5.000/4.998	3.69	1.71
	2-7/16	11.6											
	60mm	*4.9*	*53.8*	*181.1*	*64.0*	*152.4*	*22.4*	*M12*	*41.9*	*25.4*	*127.00/126.95*	*93.7*	*43.4*
214	2-1/2	13.8	2.39	7.63	2.86	6.50	1.13	1/2	1.74	1.06	5.500/5.498	4.00	1.77
	2-11/16	13.6											
	70mm	*5.8*	*60.7*	*193.8*	*72.6*	*165.1*	*28.7*	*M12*	*44.2*	*26.9*	*139.70/139.65*	*101.6*	*45.0*

#C & G dimensions will vary slightly depending on true shaft diameter.

FEATURES/BENEFITS PAGE B5-2	HOW TO ORDER/NOMENCLATURE PAGE B5-4	SELECTION PAGE B5-5	RELATED PRODUCTS PAGE B5-70

SELECTION/DIMENSIONS

DODGE®



GRIP TIGHT Adapter Ball Bearings
GTM MEDIUM DUTY PILOTED FLANGE BEARINGS

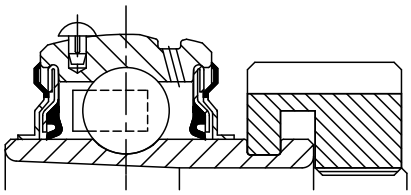

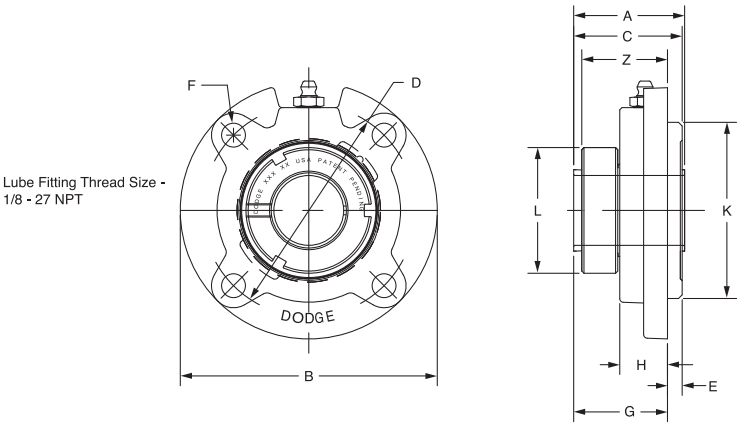

Series	Shaft Size	Complete Unit		Unit without Adapter Sleeve & Lock Nut		Adapter Sleeve & Lock Nut Assembly	
		Part No.	Description	Part No.	Description	Part No.	Description
206	1	**129758**	FC-GTM-100	**129501**	FC-GT-06	**136541**	AN-GTM-06-100-D
	25mm	***136286***	*FC-GTM-25M*			***136561***	*AN-GTM-06-25M*-D
207	1-3/16	**129759**	FC-GTM-103	**129502**	FC-GT-07	**136542**	AN-GTM-07-103-D
	1-1/4	**129738**	FC-GT-104			**136528**	AN-GT-07-104-D
	30mm	***136287***	*FC-GTM-30M*			***136562***	*AN-GTM-07-30M*-D
208	1-7/16	**129760**	FC-GTM-107	**129503**	FC-GT-08	**136543**	AN-GTM-08-107-D
	1-1/2	**129741**	FC-GT-108			**136530**	AN-GT-08-108-D
	35mm	***136288***	*FC-GTM-35M*			***136563***	*AN-GTM-08-35M*-D
209	1-1/2	**129761**	FC-GTM-108L	**129504**	FC-GT-09	**136598**	AN-GTM-09-108-D
	1-5/8	**129742**	FC-GT-110L			**136531**	AN-GT-09-110-D
	40mm	***136289***	*FC-GTM-40M*			***136564***	*AN-GTM-09-40M*-D
210	1-11/16	**129762**	FC-GTM-111	**129505**	FC-GT-10	**136544**	AN-GTM-10-111-D
	1-3/4	**129763**	FC-GTM-112			**136599**	AN-GTM-10-112-D
	45mm	***136290***	*FC-GTM-45M*			***136565***	*AN-GTM-10-45M*-D
211	1-15/16	**129764**	FC-GTM-115	**129506**	FC-GT-11	**136545**	AN-GTM-11-115-D
	2	**129765**	FC-GTM-200			**136600**	AN-GTM-11-200-D
	50mm	***136291***	*FC-GTM-50M*			***136566***	*AN-GTM-11-50M*-D
212	2-3/16	**129766**	FC-GTM-203	**129507**	FC-GT-12	**136546**	AN-GTM-12-203-D
	2-1/4	**129767**	FC-GTM-204			**136601**	AN-GTM-12-204-D
	55mm	***139292***	*FC-GTM-55M*			***136567***	*AN-GTM-12-55M*-D
214	2-7/16	**129768**	FC-GTM-207	**129508**	FC-GT-14	**136547**	AN-GTM-14-207-D
	2-1/2	**129769**	FC-GTM-208			**136548**	AN-GTM-14-208-D
	65mm	***136293***	*FC-GTM-65M*			***136568***	*AN-GTM-14-65M*-D
216	2-15/16	**129770**	FC-GTM-215	**129509**	FC-GT-16	**136550**	AN-GTM-16-215-D
	3	**129771**	FC-GTM-300			**136551**	AN-GTM-16-300-D
	75mm	***136294***	*FC-GTM-75M*			***136570***	*AN-GTM-16-75M*-D
218	3-7/16	**129772**	FC-GTM-307	**129510**	FC-GT-18	**136552**	AN-GTM-18-307-D
	3-1/2	**129773**	FC-GTM-308			**136603**	AN-GTM-18-308-D
	85mm	***136295***	*FC-GTM-85M*			***136571***	*AN-GTM-18-85M*-D

@Assembled to order

DODGE®



GRIP TIGHT Adapter Ball Bearings
GTM MEDIUM DUTY PILOTED FLANGE BEARINGS

Series	Shaft Size	Weight lbs *kg*	A	B	C#	D	E	F Bolt Dia.	G#	H	K	L	Z
206	1	3.1	1.61	4.38	1.68	3.63	0.25	3/8	1.43	0.81	3.000/2.998	2.08	1.46
	25mm	*1.5*	*40.9*	*111.3*	*42.7*	*92.2*	*6.4*	*M10*	*36.3*	*20.6*	*76.20/76.15*	*52.8*	*37.1*
207	1-3/16	4.1	1.62	5.00	1.81	4.13	0.38	3/8	1.44	0.84	3.375/3.373	2.38	1.49
	1-1/4	4.1											
	30mm	*2.0*	*41.1*	*127.0*	*46.0*	*104.9*	*9.7*	*M10*	*36.6*	*21.3*	*85.73/85.67*	*60.5*	*37.8*
208	1-7/16	5.1	1.84	5.25	2.01	4.38	0.44	7/16	1.58	0.89	3.625/3.623	2.62	1.58
	1-1/2	4.9											
	35mm	*2.5*	*46.7*	*133.4*	*51.1*	*111.3*	*11.2*	*M12*	*40.1*	*22.6*	*92.08/92.02*	*66.5*	*40.1*
209	1-1/2	6.1	1.85	5.75	1.97	4.75	0.44	1/2	1.53	0.91	4.000/3.998	2.86	1.57
	1-5/8	6.1											
	40mm	*3.0*	*47.0*	*146.1*	*50.0*	*120.7*	*11.2*	*M12*	*38.9*	*23.1*	*101.60/101.55*	*72.6*	*39.9*
210	1-11/16	6.2	1.86	6.13	2.02	5.13	0.47	1/2	1.55	0.92	4.250/4.248	3.13	1.58
	1-3/4	6.2											
	45mm	*3.0*	*47.2*	*155.7*	*51.3*	*130.3*	*11.9*	*M12*	*39.4*	*23.4*	*107.95/107.90*	*79.5*	*40.1*
211	1-15/16	8.0	1.93	6.38	2.26	5.38	0.63	1/2	1.63	1.00	4.500/4.498	3.43	1.69
	2	8.0											
	50mm	*3.9*	*49.0*	*162.1*	*57.4*	*136.7*	*16.0*	*M12*	*41.4*	*25.4*	*114.30/114.25*	*87.1*	*42.9*
212	2-3/16	11.6	2.12	7.13	2.52	6.00	0.88	1/2	1.65	1.00	5.000/4.998	3.69	1.71
	2-1/4	11.60											
	55mm	*5.6*	*53.8*	*181.1*	*64.0*	*152.4*	*22.4*	*M12*	*41.9*	*25.4*	*127.00/126.95*	*93.7*	*43.4*
214	2-7/16	13.9	2.39	7.63	2.86	6.50	1.13	1/2	1.74	1.06	5.500/5.498	4.00	1.77
	2-1/2	13.8											
	65mm	*6.7*	*60.7*	*193.8*	*72.6*	*165.1*	*28.7*	*M12*	*44.2*	*26.9*	*139.70/139.65*	*101.6*	*45.0*
216	2-15/16	15.9	2.70	8.75	3.33	7.50	1.25	5/8	2.08	1.19	6.375/6.373	4.69	2.05
	3	15.8											
	75mm	*12.9*	*68.6*	*222.3*	*84.6*	*190.5*	*31.8*	*M16*	*52.8*	*30.2*	*161.93/161.87*	*119.1*	*52.1*
218	3-7/16	36.8	2.80	10.25	3.57	8.38	1.13	3/4	2.44	1.63	7.375/7.373	5.19	2.42
	3-1/2												
	85mm	*17.8*	*71.1*	*260.4*	*90.7*	*212.9*	*28.7*	*M18*	*62.0*	*41.4*	*187.33/187.27*	*131.8*	*61.5*

#C & G dimensions will vary slightly depending on true shaft diameter.

SELECTION/DIMENSIONS

DODGE®



GRIP TIGHT Adapter Ball Bearings
GT NORMAL DUTY NARROW SLOT TAKE-UP BEARINGS

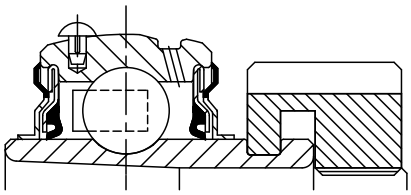

Lube Fitting Thread Size -
1/8 - 27 NPT

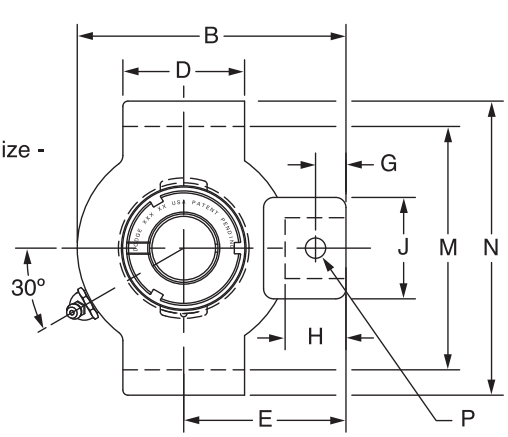

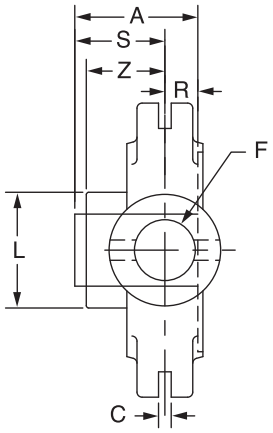

Series	Shaft Size	Complete Unit		Unit without Adapter Sleeve & Lock Nut		Adapter Sleeve & Lock Nut Assembly	
		Part No.	Description	Part No.	Description	Part No.	Description
204	3/4	**136110**	NSTU-GT-012	**136210**	NSTU-GT-04	**136522**	AN-GT-04-012-D
	20mm	***136238***	*NSTU-GT-20M*			***136553***	*AN-GT-04-20M*-D
205	7/8	**136111**	NSTU-GT-014	**136211**	NSTU-GT-05	**136590**	AN-GT-05-014-D
	15/16	**136112**	NSTU-GT-015			**136523**	AN-GT-05-015-D
	1	**136113**	NSTU-GT-100			**136524**	AN-GT-05-100-D
	25mm	***136239***	*NSTU-GT-25M*			***136554***	*AN-GT-05-25M*-D
206	1-1/8	**136114**	NSTU-GT-102	**136212**	NSTU-GT-06	**136525**	AN-GT-06-102-D
	1-3/16	**136115**	NSTU-GT-103			**136526**	AN-GT-06-103-D
	1-1/4	**136116**	NSTU-GT-104S			**136527**	AN-GT-06-104S-D
	30mm	***136240***	*NSTU-GT-30M*			***136555***	*AN-GT-06-30M*-D
207	1-1/4	**136117**	NSTU-GT-104	**136213**	NSTU-GT-07	**136528**	AN-GT-07-104-D
	1-3/8	**136118**	NSTU-GT-106			**136591**	AN-GT-07-106-D
	1-7/16	**136119**	NSTU-GT-107			**136529**	AN-GT-07-107-D
	35mm	***136241***	*NSTU-GT-35M*			***136556***	*AN-GT-07-35M*-D
208	1-1/2	**136120**	NSTU-GT-108	**136214**	NSTU-GT-08	**136530**	AN-GT-08-108-D
	1-5/8	**126121**	NSTU-GT-110			**136592**	AN-GT-08-110-D
	40mm	***136242***	*NSTU-GT-40M*			***136593***	*AN-GT-08-40M*-D
209	1-5/8	**136122**	NSTU-GT-110L	**136215**	NSTU-GT-09	**136531**	AN-GT-09-110L-D
	1-11/16	**136123**	NSTU-GT-111			**136532**	AN-GT-09-111-D
	1-3/4	**136124**	NSTU-GT-112			**136533**	AN-GT-09-112-D
	45mm	***136243***	*NSTU-GT-45M*			***136557***	*AN-GT-09-45M*-D
210	1-15/16	**136125**	NSTU-GT-115	**136216**	NSTU-GT-10	**136534**	AN-GT-10-115-D
	2	**136126**	NSTU-GT-200			**136535**	AN-GT-10-200-D
	50mm	***136244***	*NSTU-GT-50M*			***136558***	*AN-GT-10-50M*-D
211	2	**136167**	NSTU-GTM-200	**136217**	NSTU-GT-11	**136600**	AN-GTM-11-200-D
	2-3/16	**136127**	NSTU-GT-203			**136536**	AN-GT-11-203-D
	2-1/4	**136128**	NSTU-GT-204			**136537**	AN-GT-11-204-D
	55mm	***136245***	*NSTU-GT-55M*			***136559***	*AN-GT-11-55M*-D
212	2-1/4	**136169**	NSTU-GTM-204	**136218**	NSTU-GT-12	**136601**	AN-GTM-12-204-D
	2-7/16	**136129**	NSTU-GT-207			**136538**	AN-GT-12-207-D
	60mm	***136246***	*NSTU-GT-60M*			***136594***	*AN-GT-12-60M*-D

@ Assembled to order

DODGE®



GRIP TIGHT Adapter Ball Bearings
GT NORMAL DUTY NARROW SLOT TAKE-UP BEARINGS

Series	Shaft Size	Weight lbs *kg*	Take-Up Frame Size	A	B	C	D	E	F Screw Dia.	G	H	J	L	M	N	P Pin Dia.	R#	S#	Z
204	3/4	1.6	NS210	1.48	3.50	0.250	1.50	2.19	3/4	0.44	0.88	1.38	1.50	2.635/2.605	3.13	0.32	0.46	1.02	1.03
	20mm	*0.8*		*37.6*	*88.9*	*6.35*	*38.1*	*55.6*	*19.1*	*11.2*	*22.4*	*35.1*	*38.1*	*66.93/66.17*	*79.5*	*8.1*	*11.7*	*25.9*	*26.2*
205	7/8	1.7	NS210	1.46	3.56	0.250	1.50	2.19	3/4	0.44	0.88	1.38	1.80	2.635/2.605	3.13	0.32	0.48	0.98	1.00
	15/16	1.6																	
	1	1.5																	
	25mm	*0.7*		*37.1*	*90.4*	*6.35*	*38.1*	*55.6*	*19.1*	*11.2*	*22.4*	*35.1*	*45.7*	*66.93/66.17*	*79.5*	*8.1*	*12.2*	*24.9*	*25.4*
206	1-1/8	2.8	NS308	1.61	4.31	0.250	2.50	2.69	3/4	0.50	0.94	1.38	2.08	3.510/3.480	4.13	0.32	0.52	1.09	1.13
	1-3/16	2.7																	
	1-1/4	2.6																	
	30mm	*1.2*		*40.9*	*109.5*	*6.35*	*63.5*	*68.3*	*19.1*	*12.7*	*23.9*	*35.1*	*52.8*	*89.15/88.39*	*104.9*	*8.1*	*13.2*	*27.7*	*28.7*
207	1-1/4	2.8	NS308	1.62	4.50	0.250	2.50	2.69	3/4	0.50	0.94	1.38	2.38	3.510/3.480	4.13	0.32	0.54	1.08	1.14
	1-3/8	2.6																	
	1-7/16	2.5																	
	35mm	*1.2*		*41.1*	*114.3*	*6.35*	*63.5*	*68.3*	*19.1*	*12.7*	*23.9*	*35.1*	*60.5*	*89.15/88.39*	*104.9*	*8.1*	*13.7*	*27.4*	*29.0*
208	1-1/2	4.70	NS400	1.84	5.38	0.313	3.00	3.25	7/8	0.66	1.16	1.63	2.62	4.015/3.985	4.75	0.38	0.61	1.23	1.23
	1-5/8	4.50																	
	40mm	*2.1*		*46.7*	*136.7*	*7.95*	*76.2*	*82.6*	*22.2*	*16.8*	*29.5*	*41.4*	*66.5*	*101.98/101.22*	*120.7*	*9.7*	*15.5*	*31.2*	*31.2*
209	1-5/8	4.9	NS400	1.85	5.44	0.313	3.00	3.25	7/8	0.72	1.22	1.63	2.86	4.015/3.985	4.75	0.38	0.62	1.23	1.26
	1-11/16	4.8																	
	1-3/4	4.7																	
	45mm	*2.1*		*47.0*	*138.2*	*7.95*	*76.2*	*82.6*	*22.2*	*18.3*	*31.0*	*41.4*	*72.6*	*101.98/101.22*	*120.7*	*9.7*	*15.7*	*31.2*	*32.0*
210	1-15/16	4.9	NS400	1.86	5.50	0.313	3.00	3.25	7/8	0.59	1.09	1.63	3.13	4.015/3.985	4.75	0.38	0.63	1.23	1.26
	2	4.8																	
	50mm	*2.2*		*47.2*	*139.7*	*7.95*	*76.2*	*82.6*	*22.2*	*15.0*	*27.7*	*41.4*	*79.5*	*101.98/101.22*	*120.7*	*9.7*	*16.0*	*31.2*	*32.0*
211	2	6.8	NS407	1.93	6.13	0.313	3.50	3.63	1	0.69	1.28	1.75	3.43	4.448/4.418	5.38	0.44	0.67	1.26	1.32
	2-3/16	6.6																	
	2-1/4	6.5																	
	55mm	*3.0*		*49.0*	*155.7*	*7.95*	*88.9*	*92.2*	*25.4*	*17.5*	*32.5*	*44.5*	*87.1*	*112.98/112.22*	*136.7*	*11.2*	*17.0*	*32.0*	*33.5*
212	2-1/4	8.7	NS415	2.12	6.69	0.313	3.75	3.88	1	0.69	1.28	1.63	3.69	4.947/4.917	5.75	0.44	0.73	1.39	1.46
	2-7/16	8.4																	
	60mm	*4.9*		*53.8*	*169.9*	*7.95*	*95.3*	*98.6*	*25.4*	*17.5*	*32.5*	*41.4*	*93.7*	*125.65/124.89*	*146.1*	*11.2*	*18.5*	*35.3*	*37.1*

#R & S dimensions will vary slightly depending on true shaft diameter.

FEATURES/BENEFITS PAGE B5-2	HOW TO ORDER/NOMENCLATURE PAGE B5-4	SELECTION PAGE B5-5	RELATED PRODUCTS PAGE B5-70

SELECTION/DIMENSIONS

GRIP TIGHT Adapter Ball Bearings
GTM MEDIUM DUTY NARROW SLOT TAKE-UP BEARINGS

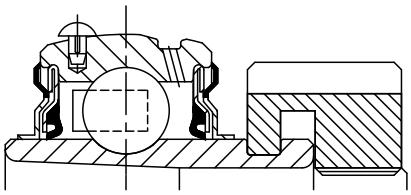

Lube Fitting Thread Size -
1/8 - 27 NPT

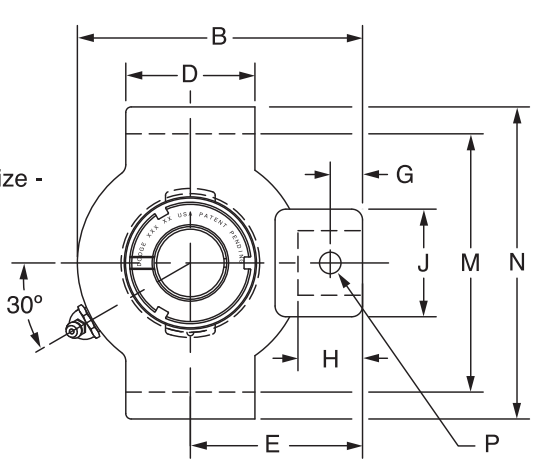

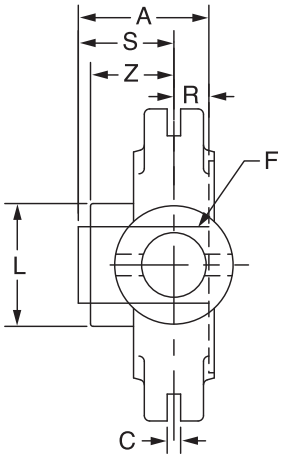

Series	Shaft Size	Complete Unit		Unit without Adapter Sleeve & Lock Nut		Adapter Sleeve & Lock Nut Assembly	
		Part No.	Description	Part No.	Description	Part No.	Description
205	3/4	**136159**	NSTU-GTM-012	**136211**	NSTU-GT-05	**136597**	AN-GTM-05-012-D
206	1	**136160**	NSTU-GTM-100	**136212**	NSTU-GTU-06	**136541**	AN-GTM-06-100-D
	25mm	***136296***	*NSTU-GTM-25M*			***136561***	*AN-GTM-06-25M*-D
207	1 -3/16	**136161**	NSTU-GTM-103	**136213**	NSTU-GT-07	**136542**	AN-GTM-07-103-D
	1-1/4	**136117**	NSTU-GT-104			**136528**	AN-GT-07-104-D
	30mm	***136297***	*NSTU-GTM-30M*			***136562***	*AN-GTM-07-30M*-D
208	1-7/16	**136162**	NSTU-GTM-107	**136214**	NSTU-GT-08	**136543**	AN-GTM-08-107-D
	35mm	***136298***	*NSTU-GTM-35M*			***136563***	*AN-GTM-08-35M*-D
209	1-1/2	**136163**	NSTU-GTM-108	**136215**	NSTU-GT-09	**136598**	AN-GTM-09-108-D
	40mm	***136299***	*NSTU-GTM-40M*			***136564***	*AN-GTM-09-40M*-D
210	1-11/16	**136164**	NSTU-GTM-111	**136216**	NSTU-GT-10	**136544**	AN-GTM-10-111-D
	1-3/4	**136165**	NSTU-GTM-112			**136599**	AN-GTM-10-112-D
	45mm	***136300***	*NSTU-GTM-45M*			***136565***	*AN-GTM-10-45M*-D
211	1-15/16	**136166**	NSTU-GTM-115	**136217**	NSTU-GT-11	**136545**	AN-GTM-11-115-D
	2	**136167**	NSTU-GTM-200			**136600**	AN-GTM-11-200-D
	50mm	***136301***	*NSTU-GTM-50M*			***136566***	*AN-GTM-11-50M*-D
212	2-3/16	**136168**	NSTU-GTM-203	**136218**	NSTU-GT-12	**136546**	AN-GTM-12-203-D
	2-1/4	**136169**	NSTU-GTM-204			**136601**	AN-GTM-12-204-D
	55mm	***136302***	*NSTU-GTM-55M*			***136567***	*AN-GTM-12-55M*-D

@ Assembled to order



GRIP TIGHT Adapter Ball Bearings
GTM MEDIUM DUTY NARROW SLOT TAKE-UP BEARINGS

Series	Shaft Size	Weight lbs kg	Take-Up Frame Size	A	B	C	D	E	F Screw Dia.	G	H	J	L	M	N	P Pin Dia.	R#	S#	Z
205	3/4	1.7	NS210	1.46	3.56	0.250	1.50	2.19	3/4	0.44	0.88	1.38	1.80	2.635/2.605	3.13	0.32	0.48	0.98	1.00
				37.1	*90.4*	*6.35*	*38.1*	*55.6*	*19.1*	*11.2*	*22.4*	*35.1*	*45.7*	*66.93/66.17*	*79.5*	*8.1*	*12.2*	*24.9*	*25.4*
206	1	2.8	NS308	1.61	4.31	0.250	2.50	2.69	3/4	0.50	0.94	1.38	2.08	3.510/3.480	4.13	0.32	0.52	1.09	1.13
	25mm	*1.2*		*40.9*	*109.5*	*6.35*	*63.5*	*68.3*	*19.1*	*12.7*	*23.9*	*35.1*	*52.8*	*89.15/88.39*	*104.9*	*8.1*	*13.2*	*27.7*	*28.7*
207	1 -3/16	2.8	NS308	1.62	4.50	0.250	2.50	2.69	3/4	0.50	0.94	1.38	2.38	3.510/3.480	4.13	0.32	0.54	1.08	1.14
	1-1/4																		
	30mm	*1.2*		*41.1*	*114.3*	*6.35*	*63.5*	*68.3*	*19.1*	*12.7*	*23.9*	*35.1*	*60.5*	*89.15/88.39*	*104.9*	*8.1*	*13.7*	*27.4*	*29.0*
208	1-7/16	4.7	NS400	1.84	5.38	0.313	3.00	3.25	7/8	0.66	1.16	1.63	2.62	4.015/3.985	4.75	0.38	0.61	1.23	1.23
	35mm	*2.1*		*46.7*	*136.7*	*7.95*	*76.2*	*82.6*	*22.2*	*16.8*	*29.5*	*41.4*	*66.5*	*101.98/101.22*	*120.7*	*9.7*	*15.5*	*31.2*	*31.2*
209	1-1/2	4.9	NS400	1.85	5.44	0.313	3.00	3.25	7/8	0.72	1.22	1.63	2.86	4.015/3.985	4.75	0.38	0.62	1.23	1.26
	40mm	*2.1*		*47.0*	*138.2*	*7.95*	*76.2*	*82.6*	*22.2*	*18.3*	*31.0*	*41.4*	*72.6*	*101.98/101.22*	*120.7*	*9.7*	*15.7*	*31.2*	*32.0*
210	1-11/16	4.9	NS400	1.86	5.50	0.313	3.00	3.25	7/8	0.59	1.09	1.63	3.13	4.015/3.985	4.75	0.38	0.63	1.23	1.26
	1-3/4																		
	45mm	*2.2*		*47.2*	*139.7*	*7.95*	*76.2*	*82.6*	*22.2*	*15.0*	*27.7*	*41.4*	*79.5*	*101.98/101.22*	*120.7*	*9.7*	*16.0*	*31.2*	*32.0*
211	1-15/16	6.80	NS407	1.93	6.13	0.313	3.50	3.63	1	0.69	1.28	1.75	3.43	4.448/4.418	5.38	0.44	0.67	1.26	1.32
	2																		
	50mm	*3.0*		*49.0*	*155.7*	*7.95*	*88.9*	*92.2*	*25.4*	*17.5*	*32.5*	*44.5*	*87.1*	*112.98/112.22*	*136.7*	*11.2*	*17.0*	*32.0*	*33.5*
212	2-3/16	8.7	NS415	2.12	6.69	0.313	3.75	3.88	1	0.69	1.28	1.63	3.69	4.947/4.917	5.75	0.44	0.73	1.39	1.46
	2-1/4																		
	55mm	*4.9*		*53.8*	*169.9*	*7.95*	*95.3*	*98.6*	*25.4*	*17.5*	*32.5*	*41.4*	*93.7*	*125.65/124.89*	*146.1*	*11.2*	*18.5*	*35.3*	*37.1*

#R & S dimensions will vary slightly depending on true shaft diameter.

SELECTION/DIMENSIONS

GRIP TIGHT Adapter Ball Bearings
GT NORMAL DUTY WIDE SLOT TAKE-UP BEARINGS

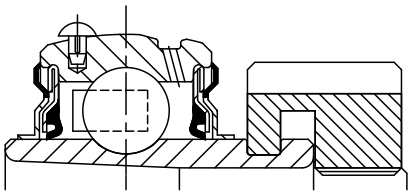

Lube Fitting Thread Size -
1/8 - 27 NPT

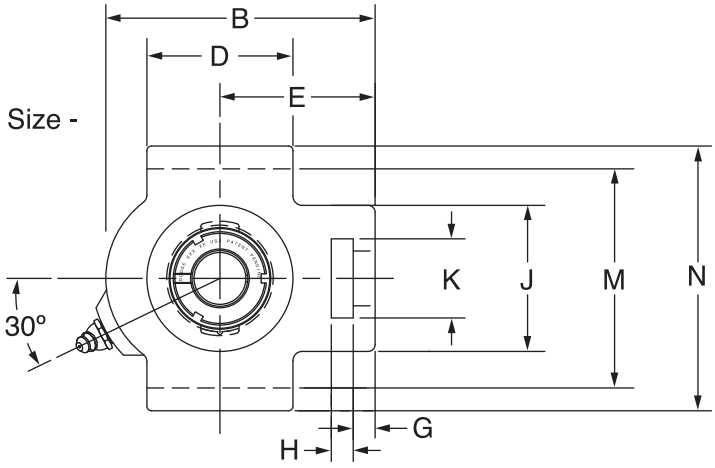

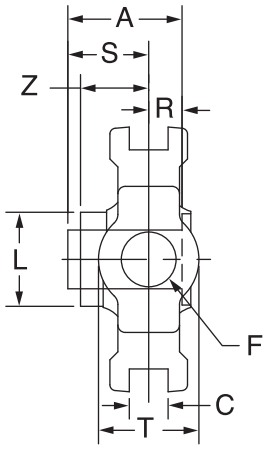

Series	Shaft Size	Complete Unit		Unit without Adapter Sleeve & Lock Nut		Adapter Sleeve & Lock Nut Assembly	
		Part No.	Description	Part No.	Description	Part No.	Description
204	3/4	**136130**	WSTU-GT-012	**136219**	WSTU-GT-04	***136522***	AN-GT-04-012-D
	20mm	***136247***	*WSTU-GT-20M*			***136553***	*AN-GT-04-20M*-D
205	7/8	**136131**	WSTU-GT-014	**136220**	WSTU-GT-05	**136590**	AN-GT-05-014-D
	15/16	**136132**	WSTU-GT-015			**136523**	AN-GT-05-015-D
	1	**136133**	WSTU-GT-100			**136524**	AN-GT-05-100-D
	25mm	***136248***	*WSTU-GT-25M*			***136554***	*AN-GT-05-25M*-D
206	1-1/8	**136134**	WSTU-GT-102	**136221**	WSTU-GT-06	**136525**	AN-GT-06-102-D
	1-3/16	**136135**	WSTU-GT-103			**136526**	AN-GT-06-103-D
	1-1/4	**136136**	WSTU-GT-104S			**136527**	AN-GT-06-104S-D
	30mm	***136249***	*WSTU-GT-30M*			***136555***	*AN-GT-06-30M*-D
207	1-1/4	**136137**	WSTU-GT-104	**136222**	WSTU-GT-07	**136528**	AN-GT-07-104-D
	1-3/8	**136138**	WSTU-GT-106			**136591**	AN-GT-07-106-D
	1-7/16	**136139**	WSTU-GT-107			**136529**	AN-GT-07-107-D
	35mm	***136250***	*WSTU-GT-35M*			***136556***	*AN-GT-07-35M*-D
208	1-1/2	**136140**	WSTU-GT-108	**136223**	WSTU-GT-08	**136530**	AN-GT-08-108-D
	1-5/8	**136141**	WSTU-GT-110			**136592**	AN-GT-08-110-D
	40mm	***136251***	*WSTU-GT-40M*			***136593***	*AN-GT-08-40M*-D

@ Assembled to order

DODGE®



GRIP TIGHT Adapter Ball Bearings
GT NORMAL DUTY WIDE SLOT TAKE-UP BEARINGS

Series	Shaft Size	Weight lbs *kg*	Take-Up Frame Size	A	B	C	D	E	F Screw Dia.	G	H	J	K	L	M	N	R#	S#	T	Z
204	3/4	1.9	WS300	1.48	3.69	0.531	2.00	2.38	5/8	0.38	0.63	2.00	1.25	1.50	2.985/3.015	3.63	0.46	1.02	1.38	1.03
	20mm	*0.9*		*37.6*	*93.7*	*13.49*	*50.8*	*60.5*	*15.9*	*9.7*	*16.0*	*50.8*	*31.8*	*38.1*	*75.82/76.58*	*92.2*	*11.7*	*25.9*	*35.1*	*26.2*
205	7/8	2.2	WS300	1.46	3.81	0.531	2.00	2.44	5/8	0.38	0.63	2.00	1.31	1.80	2.985/3.015	3.63	0.48	0.98	1.38	1.00
	15/16	2.1																		
	1	2.0																		
	25mm	*1.0*		*37.1*	*96.8*	*13.49*	*50.8*	*62.0*	*15.9*	*9.7*	*16.0*	*50.8*	*33.3*	*45.7*	*75.82/76.58*	*92.2*	*12.2*	*24.9*	*35.1*	*25.4*
206	1-1/8	2.7	WS308	1.61	4.38	0.531	2.25	2.75	3/4	0.38	0.63	2.19	1.44	2.08	3.480/3.510	4.13	0.52	1.09	1.63	1.13
	1-3/16	2.6																		
	1-1/4	2.5																		
	30mm	*1.3*		*40.9*	*111.3*	*13.49*	*57.2*	*69.9*	*19.1*	*9.7*	*16.0*	*55.6*	*36.6*	*52.8*	*88.39/89.15*	*104.9*	*13.2*	*27.7*	*41.3*	*28.7*
207	1-1/4	3.7	WS308	1.62	4.87	0.531	2.50	3.06	3/4	0.50	0.63	2.50	1.44	2.38	3.480/3.510	4.13	0.54	1.08	1.63	1.14
	1-3/8	3.6																		
	1-7/16	3.5																		
	35mm	*1.6*		*41.1*	*123.7*	*13.49*	*63.5*	*77.7*	*19.1*	*12.7*	*16.0*	*63.5*	*36.6*	*60.5*	*88.39/89.15*	*104.9*	*13.7*	*27.4*	*41.3*	*29.0*
208	1-1/2	6.1	WS400	1.84	5.69	0.688	3.25	3.50	1	0.63	0.75	3.25	1.94	2.62	3.985/4.015	4.50	0.61	1.23	1.94	1.23
	1-5/8	5.9																		
	40mm	*2.8*		*46.7*	*144.5*	*17.48*	*82.6*	*88.9*	*25.4*	*16.0*	*19.1*	*82.6*	*49.3*	*66.5*	*101.22/101.98*	*114.3*	*15.5*	*31.2*	*49.3*	*31.2*

#R & S dimensions will vary slightly depending on true shaft diameter.

SELECTION/DIMENSIONS

GRIP TIGHT Adapter Ball Bearings
GT NORMAL DUTY WIDE SLOT TAKE-UP BEARINGS

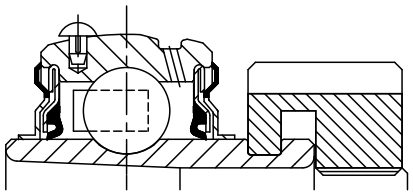

Lube Fitting Thread Size -
1/8 - 27 NPT

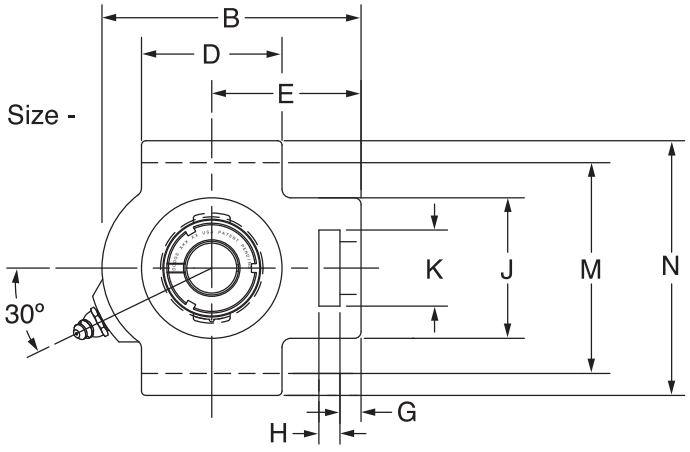

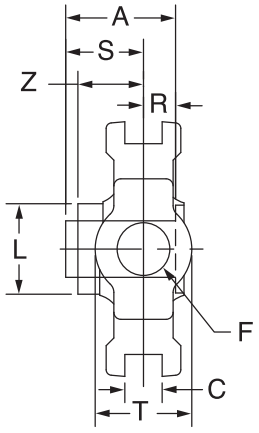

Series	Shaft Size	Complete Unit		Unit without Adapter Sleeve & Lock Nut		Adapter Sleeve & Lock Nut Assembly	
		Part No.	Description	Part No.	Description	Part No.	Description
209	1-5/8	**136142**	WSTU-GT-110L	**136224**	WSTU-GT-09	**136531**	AN-GT-09-110-D
	1-11/16	**136143**	WSTU-GT-111			**136532**	AN-GT-09-111-D
	1-3/4	**136144**	WSTU-GT-112			**136533**	AN-GT-09-112-D
	45mm	***136252***	*WSTU-GT-45M*			***136557***	*AN-GT-09-45M*-D
210	1-15/16	**136145**	WSTU-GT-115	**136225**	WSTU-GT-10	**136534**	AN-GT-10-115-D
	2	**136146**	WSTU-GT-200			**136535**	AN-GT-10-200-D
	50mm	***136253***	*WSTU-GT-50M*			***136558***	*AN-GT-10-50M*-D
211	2	**136178**	WSTU-GTM-200	**136226**	WSTU-GT-11	**136600**	AN-GTM-11-200-D
	2-3/16	**136147**	WSTU-GT-203			**136536**	AN-GT-11-203-D
	2-1/4	**136148**	WSTU-GT-204			**136537**	AN-GT-11-204-D
	55mm	***136254***	*WSTU-GT-55M*			***136559***	*AN-GT-11-55M*-D
212	2-1/4	**136180**	WSTU-GTM-204	**136227**	WSTU-GT-12	**136601**	AN-GTM-12-204-D
	2-7/16	**136149**	WSTU-GT-207			**136538**	AN-GT-12-207-D
	60mm	***136255***	*WSTU-GT-60M*			***136594***	*AN-GT-12-60M*-D
214	2-1/2	**136182**	WSTU-GTM-208	**136228**	WSTU-GT-14	**136548**	AN-GTM-14-208-D
	2-11/16	**136150**	WSTU-GT-211			**136539**	AN-GT-14-211-D
	70mm	***163256***	*WSTU-GT-70M*			***136560***	*AN-GT-14-70M*-D
215	2-15/16	**136151**	WSTU-GT-215	**136229**	WSTU-GT-15	**136540**	AN-GT-15-215-D
	3	**@**	WSTU-GT-300			**136595**	AN-GT-15-300-D
	75mm	***136257***	*WSTU-GT-75M*			***136596***	*AN-GT-15-75M*-D

@ Assembled to order

DODGE®



GRIP TIGHT Adapter Ball Bearings
GT NORMAL DUTY WIDE SLOT TAKE-UP BEARINGS

Series	Shaft Size	Wgt. lbs kg	Take-Up Frame Size	A	B	C	D	E	F Screw Dia.	G	H	J	K	L	M	N	R#	S#	T	Z
209	1-5/8	6.1	WS400	1.85	5.63	0.688	3.25	3.44	1	0.63	0.75	3.25	1.94	2.86	3.985/4.015	4.75	0.62	1.23	1.94	1.26
	1-11/16	6.0																		
	1-3/4	5.9																		
	45mm	*2.7*		*47.0*	*143.0*	*17.48*	*82.6*	*87.4*	*25.4*	*16.0*	*19.1*	*82.6*	*49.3*	*72.6*	*101.22/101.98*	*120.7*	*15.7*	*31.2*	*49.3*	*32.0*
210	1-15/16	6.4	WS400	1.86	5.82	0.688	3.38	3.56	1	0.63	0.75	3.25	1.94	3.13	3.985/4.015	4.75	0.63	1.23	1.94	1.26
	2	6.30																		
	50mm	*2.90*		*47.2*	*147.8*	*17.48*	*85.9*	*90.4*	*25.4*	*16.0*	*19.1*	*82.6*	*49.3*	*79.5*	*101.22/101.98*	*120.7*	*16.0*	*31.2*	*49.3*	*32.0*
211	2	10.1	WS502	1.93	6.69	1.063	3.75	4.19	1-1/4	0.75	1.00	4.00	2.50	3.43	5.110/5.140	5.88	0.67	1.26	2.50	1.32
	2-3/16	10.0																		
	2-1/4	9.9																		
	55mm	*4.5*		*49.0*	*169.9*	*27.00*	*95.3*	*106.4*	*31.8*	*19.1*	*25.4*	*101.6*	*63.5*	*87.1*	*129.79/130.56*	*149.4*	*17.0*	*32.0*	*63.5*	*33.5*
212	2-1/4	11.2	WS502	2.12	7.50	1.063	4.00	4.69	1-1/4	0.75	1.25	4.00	2.50	3.69	5.110/5.140	5.88	0.73	1.39	2.50	1.46
	2-7/16	10.8																		
	60mm	*4.9*		*53.8*	*190.5*	*27.00*	*101.6*	*119.1*	*31.8*	*19.1*	*31.8*	*101.6*	*63.5*	*93.7*	*129.79/130.56*	*149.4*	*18.5*	*35.3*	*63.5*	*37.1*
214	2-1/2	18.0	WS515	2.39	8.56	1.063	4.75	5.38	1-1/2	0.81	1.25	4.38	2.75	4.00	5.923/5.953	6.56	0.84	1.55	2.75	1.58
	2-11/16	17.8																		
	70mm	*8.2*		*60.7*	*217.4*	*27.00*	*120.7*	*136.7*	*38.1*	*20.6*	*31.8*	*111.3*	*69.9*	*101.6*	*150.44/151.21*	*166.6*	*21.3*	*39.4*	*69.9*	*40.1*
215	2-15/16	18.9	WS515	2.46	9.13	1.063	4.75	5.50	1-1/2	0.81	1.25	4.38	2.75	4.44	5.923/5.953	6.69	0.86	1.60	2.75	1.60
	3	18.7																		
	75mm	*8.6*		*62.5*	*231.9*	*27.00*	*120.7*	*139.7*	*38.1*	*20.6*	*31.8*	*111.3*	*69.9*	*112.8*	*150.44/151.21*	*169.9*	*21.8*	*40.6*	*69.9*	*40.6*

#R & S dimensions will vary slightly depending on true shaft diameter.

FEATURES/BENEFITS PAGE B5-2	HOW TO ORDER/NOMENCLATURE PAGE B5-4	SELECTION PAGE B5-5	RELATED PRODUCTS PAGE B5-70

SELECTION/DIMENSIONS

GRIP TIGHT Adapter Ball Bearings
GTM MEDIUM DUTY WIDE SLOT TAKE-UP BEARINGS

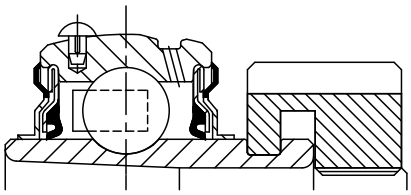

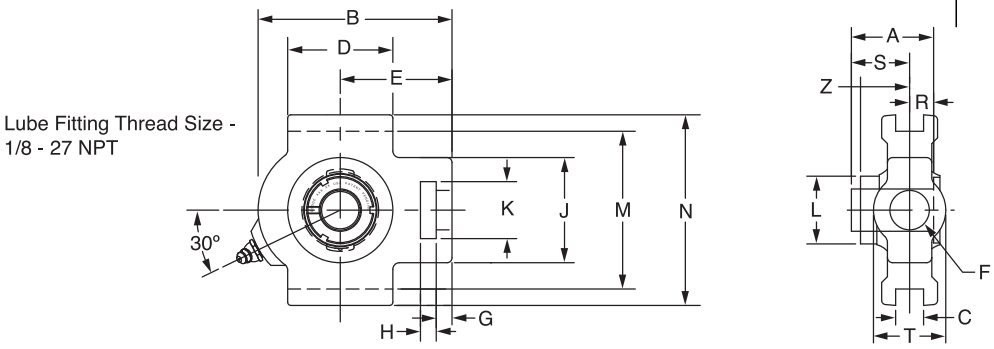

Series	Shaft Size	Complete Unit		Unit without Adapter Sleeve & Lock Nut		Adapter Sleeve & Lock Nut Assembly	
		Part No.	Description	Part No.	Description	Part No.	Description
205	3/4	**136170**	WSTU-GTM-012	**136220**	WSTU-GT-05	**136597**	AN-GTM-05-012-D
206	1	**136171**	WSTU-GTM-100	**136221**	WSTU-GTU-06	**136541**	AN-GTM-06-100-D
	25mm	***136303***	*WSTU-GTM-25M*			***136561***	*AN-GTM-06-25M*-D
207	1-3/16	**136172**	WSTU-GTM-103	**136222**	WSTU-GT-07	**136542**	AN-GTM-07-103-D
	1-1/4	**136137**	WSTU-GT-104			**136528**	AN-GT-07-104-D
	30mm	***136304***	*WSTU-GTM-30M*			***136562***	*AN-GTM-07-30M*-D
208	1-7/16	**136173**	WSTU-GTM-107	**136223**	WSTU-GT-08	**136543**	AN-GTM-08-107-D
	35mm	***136305***	*WSTU-GTM-35M*			***136563***	*AN-GTM-08-35M*-D
209	1-1/2	**136174**	WSTU-GTM-108	**136224**	WSTU-GT-09	**136598**	AN-GTM-09-108-D
	40mm	***136306***	*WSTU-GTM-40M*			***136564***	*AN-GTM-09-40M*-D
210	1-11/16	**136175**	WSTU-GTM-111	**136225**	WSTU-GT-10	**136544**	AN-GTM-10-111-D
	1-3/4	**136176**	WSTU-GTM-112			**136599**	AN-GTM-10-112-D
	45mm	***136307***	*WSTU-GTM-45M*			**136565**	*AN-GTM-10-45M*-D
211	1-15/16	**136177**	WSTU-GTM-115	**136226**	WSTU-GT-11	**136545**	AN-GTM-11-115-D
	2	**136178**	WSTU-GTM-200			**136600**	AN-GTM-11-200-D
	50mm	***136308***	*WSTU-GTM-50M*			***136566***	*AN-GTM-11-50M*-D
212	2-3/16	**136179**	WSTU-GTM-203	**136227**	WSTU-GT-12	**136546**	AN-GTM-12-203-D
	2-1/4	**136180**	WSTU-GTM-204			**136601**	AN-GTM-12-204-D
	55mm	***136309***	*WSTU-GTM-55M*			***136567***	*AN-GTM-12-55M*-D
214	2-7/16	**136181**	WSTU-GTM-207	**136228**	WSTU-GT-14	**136547**	AN-GTM-14-207-D
	2-1/2	**136182**	WSTU-GTM-208			**136548**	AN-GTM-14-208-D
	65mm	***136310***	*WSTU-GTM-65M*			***136568***	*AN-GTM-14-65M*-D
215	2-11/16	**136183**	WSTU-GTM-211	**136229**	WSTU-GT-15	**136549**	AN-GTM-15-211-D
	70mm	***136311***	*WSTU-GTM-70M*			***136569***	*AN-GTM-15-70M*-D
216	2-15/16	**136184**	WSTU-GTM-215	**136230**	WSTU-GT-16	**136550**	AN-GTM-16-215-D
	3	**136185**	WSTU-GTM-300			**136551**	AN-GTM-16-300-D
	75mm	***136312***	*WSTU-GTM-75M*			***136570***	*AN-GTM-16-75M*-D

@ Assembled to order

DODGE®



GRIP TIGHT Adapter Ball Bearings
GTM MEDIUM DUTY WIDE SLOT TAKE-UP BEARINGS

Series	Shaft Size	Weight lbs kg	Take-Up Frame Size	A	B	C	D	E	F Screw Dia.	G	H	J	K	L	M	N	R#	S#	T	Z
205	3/4	2.7	WS300	1.46 *37.1*	3.81 *96.8*	0.531 *13.49*	2.00 *50.8*	2.44 *62.0*	5/8 *15.9*	0.38 *9.7*	0.63 *16.0*	2.00 *50.8*	1.31 *33.3*	1.80 *45.7*	2.985/3.015 *75.82/76.58*	3.63 *92.2*	0.48 *12.2*	0.98 *24.9*	1.38 *35.1*	1.00 *25.4*
206	1 *25mm*	4.1 *1.3*	WS308	1.61 *40.9*	4.38 *111.3*	0.531 *13.49*	2.25 *57.2*	2.75 *69.9*	3/4 *19.1*	0.38 *9.7*	0.63 *16.0*	2.19 *55.6*	1.44 *36.6*	2.08 *52.8*	3.480/3.510 *88.39/89.15*	4.13 *104.9*	0.52 *13.2*	1.09 *27.7*	1.63 *41.3*	1.13 *28.7*
207	1-3/16 1-1/4 *30mm*	5.1 *3.7*	WS308	1.62 *41.1*	4.87 *123.7*	0.531 *13.49*	2.50 *63.5*	3.06 *77.7*	3/4 *19.1*	0.50 *12.7*	0.63 *16.0*	2.50 *63.5*	1.44 *36.6*	2.38 *60.5*	3.480/3.510 *88.39/89.15*	4.13 *104.9*	0.54 *13.7*	1.08 *27.4*	1.63 *41.3*	1.14 *29.0*
208	1-7/16 *35mm*	7.3 *3.5*	WS400	1.84 *46.7*	5.69 *144.5*	0.688 *17.48*	3.25 *82.6*	3.50 *88.9*	1 *25.4*	0.63 *16.0*	0.75 *19.1*	3.25 *82.6*	1.94 *49.3*	2.62 *66.5*	3.985/4.015 *101.22/101.98*	4.50 *114.3*	0.61 *15.5*	1.23 *31.2*	1.94 *49.3*	1.23 *31.2*
209	1-1/2 *40mm*	7.2 *6.1*	WS400	1.85 *47.0*	5.63 *143.0*	0.688 *17.48*	3.25 *82.6*	3.44 *87.4*	1 *25.4*	0.63 *16.0*	0.75 *19.1*	3.25 *82.6*	1.94 *49.3*	2.86 *72.6*	3.985/4.015 *101.22/101.98*	4.75 *120.7*	0.62 *15.7*	1.23 *31.2*	1.94 *49.3*	1.26 *32.0*
210	1-11/16 1-3/4 *45mm*	7.7 *7.6*	WS400	1.86 *47.2*	5.82 *147.8*	0.688 *17.48*	3.38 *85.9*	3.56 *90.4*	1 *25.4*	0.63 *16.0*	0.75 *19.1*	3.25 *82.6*	1.94 *49.3*	3.13 *79.5*	3.985/4.015 *101.22/101.98*	4.75 *120.7*	0.63 *16.0*	1.23 *31.2*	1.94 *49.3*	1.26 *32.0*
211	1-15/16 2 *50mm*	11.2 *11.3*	WS502	1.93 *49.0*	6.69 *169.9*	1.063 *27.00*	3.75 *95.3*	4.19 *106.4*	1-1/4 *31.8*	0.75 *19.1*	1.00 *25.4*	4.00 *101.6*	2.50 *63.5*	3.43 *87.1*	5.110/5.140 *129.79/130.56*	5.88 *149.4*	0.67 *17.0*	1.26 *32.0*	2.50 *63.5*	1.32 *33.5*
212	2-3/16 2-1/4 *55mm*	12.6 *12.4*	WS502	2.12 *53.8*	7.50 *190.5*	1.063 *27.00*	4.00 *101.6*	4.69 *119.1*	1-1/4 *31.8*	0.75 *19.1*	1.25 *31.8*	4.00 *101.6*	2.50 *63.5*	3.69 *93.7*	5.110/5.140 *129.79/130.56*	5.88 *149.4*	0.73 *18.5*	1.39 *35.3*	2.50 *63.5*	1.46 *37.1*
214	2-7/16 2-1/2 *65mm*	19.4 19.20 *9.3*	WS515	2.39 *60.7*	8.56 *217.4*	1.063 *27.00*	4.75 *120.7*	5.38 *136.7*	1-1/2 *38.1*	0.81 *20.6*	1.25 *31.8*	4.38 *111.3*	2.75 *69.9*	4.00 *101.6*	5.923/5.953 *150.44/151.21*	6.56 *166.6*	0.84 *21.3*	1.55 *39.4*	2.75 *69.9*	1.58 *40.1*
215	2-11/16 *70mm*	20.2 *8.3*	WS515	2.46 *62.5*	9.13 *231.9*	1.063 *27.00*	4.75 *120.7*	5.50 *139.7*	1-1/2 *38.1*	0.81 *20.6*	1.25 *31.8*	4.38 *111.3*	2.75 *69.9*	4.44 *112.8*	5.923/5.953 *150.44/151.21*	6.69 *169.9*	0.86 *21.8*	1.60 *40.6*	2.75 *69.9*	1.60 *40.6*
216	2-15/16 3 *75mm*	22.9 *9.1*	WS608	2.70 *68.6*	9.13 *231.9*	1.063 *27.00*	4.75 *120.7*	2.38 *60.5*	1-1/2 *38.1*	0.81 *20.6*	1.25 *31.8*	4.38 *111.3*	2.75 *69.9*	4.69 *119.1*	6.485/6.515 *164.72/165.48*	7.25 *184.2*	0.89 *22.6*	1.81 *46.0*	2.75 *69.9*	1.78 *45.2*

#R & S dimensions will vary slightly depending on true shaft diameter.

SELECTION/DIMENSIONS

GRIP TIGHT Adapter Ball Bearings
GT NORMAL DUTY TOP ANGLE TAKE-UP BEARINGS

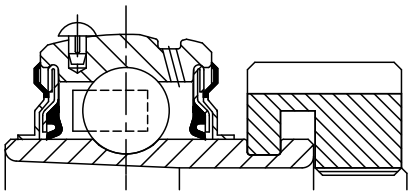

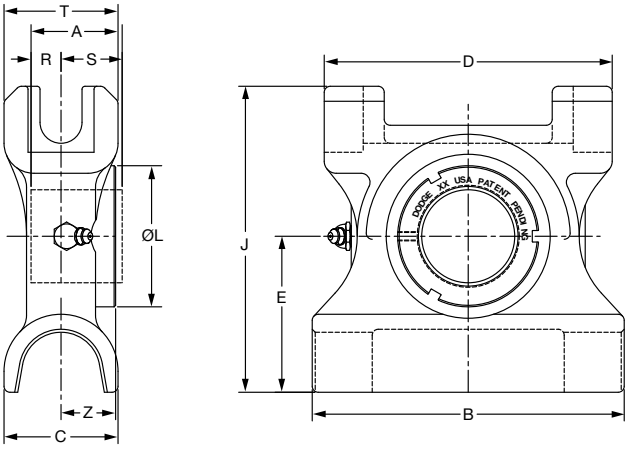

Series	Shaft Size	Complete Unit		Unit Without Adapter & Nut		Adapter & Nut Assembly	
		Part No.	Description	Part No.	Description	Part No.	Description
210	1-15/16	**136152**	TP-GT-115	**136231**	TP-GT-10	**136534**	AN-GT-10-115-D
	2	**136153**	TP-GT-200			**136535**	AN-GT-10-200-D
211	2	**136189**	TP-GTM-200	**136232**	TP-GT-11	**136558**	AN-GTM-11-200-D
	2-3/16	**136154**	TP-GT-203			**136536**	AN-GT-11-203-D
	2-1/4	**136155**	TP-GT-204			**136537**	AN-GT-11-204-D
212	2-1/4	**136191**	TP-GTM-204	**136233**	TP-GT-12	**136559**	AN-GTM-12-204-D
	2-7/16	**136156**	TP-GT-207			**136538**	AN-GT-12-207-D
214	2-1/2	**136193**	TP-GTM-208	**136234**	TP-GT-14	**136594**	AN-GTM-14-208-D
	2-11/16	**136157**	TP-GT-211			**136548**	AN-GT-14-211-D
215	2-15/16	**136158**	TP-GT-215	**136235**	TP-GT-15	**136560**	AN-GT-15-215-D

@ Assembled to order

Series	Shaft Size	Weight lbs	Take-Up Frame Size	A	B	C	D	E	J	L	R#	S#	T	Z
210	1-15/16	11.4	TP10	1.86	6.50	2.38	6.00	3.25	6.38	3.13	0.63	1.23	2.38	1.26
	2	11.2												
211	2	13.7	TP20	1.93	7.00	2.50	6.75	3.38	7.88	3.43	0.67	1.26	2.38	1.32
	2-3/16													
	2-1/4	13.2												
212	2-1/4	17.2	TP30	2.12	7.50	2.75	7.00	3.50	7.44	3.69	0.73	1.39	2.75	1.46
	2-7/16	17.1												
214	2-1/2	22.5	TP40	2.39	8.50	2.50	8.00	4.00	8.31	4.00	0.94	1.45	2.75	1.58
	2-11/16	22.3												
215	2-15/16	22.4	TP40	2.46	8.50	2.50	8.00	4.00	8.31	4.44	0.95	1.51	2.75	1.60

Lube fitting thread size - 1/8-27 NPT

#R & S dimensions will vary slightly depending on true shaft diameter.

DODGE®



GRIP TIGHT Adapter Ball Bearings
GTM MEDIUM DUTY TOP ANGLE TAKE-UP BEARINGS

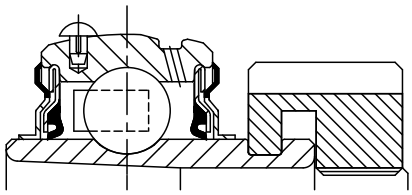

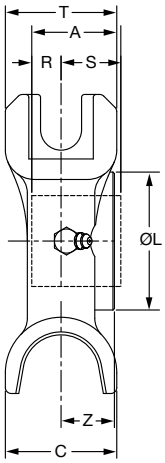

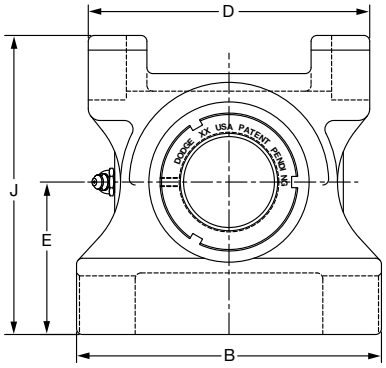

Series	Shaft Size	Complete Unit		Unit Without Adapter & Nut		Adapter & Nut Assembly	
		Part No.	Description	Part No.	Description	Part No.	Description
210	1-11/16	**136186**	TP-GTM 111	**136231**	TP-GT-10	**136544**	AN-GTM-10-111-D
	1 -3/4	**136187**	TP-GTM-112			**136599**	AN-GTM-10-112-D
211	1-15/16	**136188**	TP-GTM 115	**136232**	TP-GT-11	**136545**	AN-GTM-11-115-D
	2	**136189**	TP-GTM-200			**136600**	AN-GTM-11-200-D
212	2 -3/16	**136190**	TP-GTM-203	**136233**	TP-GT-12	**136546**	AN-GTM-12-203-D
	2-1/4	**136191**	TP-GTM-204			**136601**	AN-GTM-12-204-D
214	2-7/16	**136192**	TP-GTM-207	**136234**	TP-GT-14	**136547**	AN-GTM-14-207-D
	2-1/2	**136193**	TP-GTM-208			**136548**	AN-GTM-14-208-D
215	2-11/16	**136194**	TP-GM-211	**136235**	TP-GT-15	**136549**	AN-GTM-15-211-D
216	2 -5/16	**136195**	TP-GTM 215	**136236**	TP-GT-16	**136550**	AN-GTM-16-215-D
	3	**136196**	TP-GTM-300			**136551**	AN-GTM-16-300-D
218	3-7/16	**136197**	TP-GTM-307	**136237**	TP-GT-18	**136552**	AN-GTM-18-307-D
	3-1/2	**136198**	TP-GTM-308			**136603**	AN-GTM-18-308-D

Series	Shaft Size	Weight lbs	Take-Up Frame Size	A	B	C	D	E	J	L	R#	S#	T	Z
210	1-11/16	11.6	TP10	1.86	6.50	2.38	6.00	3.25	6.38	3.13	0.63	1.23	2.38	1.26
	1 -3/4	11.2												
211	1-15/16	14.0	TP20	1.93	7.00	2.50	6.75	3.38	7.88	3.43	0.67	1.26	2.38	1.32
	2	13.7												
212	2 -3/16	17.4	TP30	2.12	7.50	2.75	7.00	3.50	7.44	3.69	0.73	1.39	2.75	1.46
	2-1/4	17.2												
214	2-7/16	22.9	TP40	2.39	8.50	2.50	8.00	4.00	8.31	4.00	0.94	1.45	2.75	1.58
	2-1/2	22.5												
215	2-11/16	26.2	TP40	2.46	8.50	2.50	8.00	4.00	8.31	4.44	0.95	1.51	2.75	1.60
216	2 -15/16	31.0	TP50	2.70	9.50	2.75	9.00	4.50	9.63	4.69	0.99	1.71	3.13	1.78
	3	30.7												
218	3-7/16	41.4	TP50	2.80	11.00	3.13	10.50	5.50	11.00	5.19	1.02	1.78	3.13	1.81
	3-1/2	41.1												

Lube fitting thread size - 1/8-27 NPT

#R & S dimensions will vary slightly depending on true shaft diameter.

FEATURES/BENEFITS PAGE B5-2 | HOW TO ORDER/NOMENCLATURE PAGE B5-4 | SELECTION PAGE B5-5 | RELATED PRODUCTS PAGE B5-70

SELECTION/DIMENSIONS

GRIP TIGHT Adapter Ball Bearings
GT NORMAL DUTY BEARING INSERTS

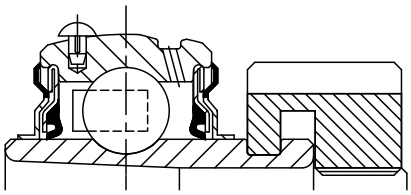

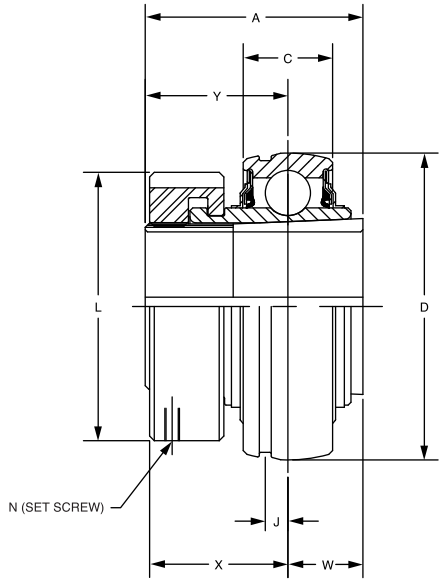

Series	Shaft Size	Complete Unit		Unit without Adapter Sleeve & Lock Nut		Adapter Sleeve & Lock Nut Assembly	
		Part No.	Description	Part No.	Description	Part No.	Description
203	1/2	**129774**	INS-GT-008	**129516**	INS-GT-03	**136588**	AN-GT-03-008-D
	5/8	**129775**	INS-GT-010			**136521**	AN-GT-03-010-D
	17mm	***129796***	*INS-GT-17M*			***136589***	*AN-GT-03-17M*-D
204	3/4	**129776**	INS-GT-012	**129517**	INS-GT-04	**136522**	AN-GT-04-012-D
	20mm	***129797***	*INS-GT-20M*			***136553***	*AN-GT-04-20M*-D
205	7/8	**129777**	INS-GT-014	**129518**	INS-GT-05	**136590**	AN-GT-05-014-D
	15/16	**129778**	INS-GT-015			**136523**	AN-GT-05-015-D
	1	**129779**	INS-GT-100			**136524**	AN-GT-05-100-D
	25mm	***129798***	*INS-GT-25M*			***136554***	*AN-GT-05-25M*-D
206	1-1/8	**129780**	INS-GT-102	**129519**	INS-GT-06	**136525**	AN-GT-06-102-D
	1-3/16	**129781**	INS-GT-103			**136526**	AN-GT-06-103-D
	1-1/4	**129782**	INS-GT-104S			**136527**	AN-GT-06-104S-D
	30mm	***129799***	*INS-GT-30M*			***136555***	*AN-GT-06-30M*-D
207	1-1/4	**129783**	INS-GT-104	**129520**	INS-GT-07	**136528**	AN-GT-07-104-D
	1-3/8	**129784**	INS-GT-106			**136591**	AN-GT-07-106-D
	1-7/16	**129785**	INS-GT-107			**136529**	AN-GT-07-107-D
	35mm	***129800***	*INS-GT-35M*			***136556***	*AN-GT-07-35M*-D

@ Assembled to order.

DODGE®



GRIP TIGHT Adapter Ball Bearings
GT NORMAL DUTY BEARING INSERTS

Series	Shaft Size	Weight lbs *kg*	A	C	D	J	L	N SetScrew (UNF)	W#	X	Y#
203	1/2	0.3	1.29	0.51	1.5748	0.15	1.40	#10-32 x 1/4	0.40	0.90	0.89
	5/8	0.3									
	17mm	*0.1*	*32.8*	*13.0*	*40.000*	*3.8*	*35.6*		*10.2*	*22.9*	*22.6*
204	3/4	0.6	1.48	0.58	1.8504	0.15	1.50	#10-32 x 1/4	0.46	1.03	1.02
	20mm	*0.3*	*37.6*	*14.7*	*47.000*	*3.8*	*38.1*		*11.7*	*26.2*	*25.9*
205	7/8	0.8	1.46	0.59	2.0472	0.16	1.80	#10-32 x 1/4	0.48	1.00	0.98
	15/16	0.8									
	1	0.8									
	25mm	*0.4*	*37.1*	*15.0*	*52.000*	*4.1*	*45.7*		*12.2*	*25.4*	*24.9*
206	1-1/8	1.2	1.61	0.69	2.4409	0.16	2.08	#10-32 x 1/4	0.52	1.13	1.09
	1-3/16	1.2									
	1-1/4	1.1									
	30mm	*0.6*	*40.9*	*17.5*	*62.000*	*4.1*	*52.8*		*13.2*	*28.7*	*27.7*
207	1-1/4	1.8	1.62	0.75	2.8346	0.20	2.38	#10-32 x 1/4	0.54	1.14	1.08
	1-3/8	1.8									
	1-7/16	1.7									
	35mm	*0.8*	*41.1*	*19.1*	*72.000*	*5.1*	*60.5*		*13.7*	*29.0*	*27.4*

#W & Y dimensions will vary slightly depending on true shaft diameter.

SELECTION/DIMENSIONS

GRIP TIGHT Adapter Ball Bearings
GT NORMAL DUTY BEARING INSERTS

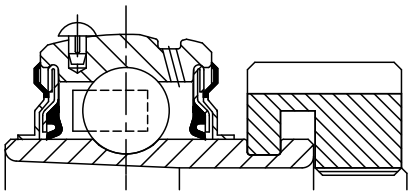

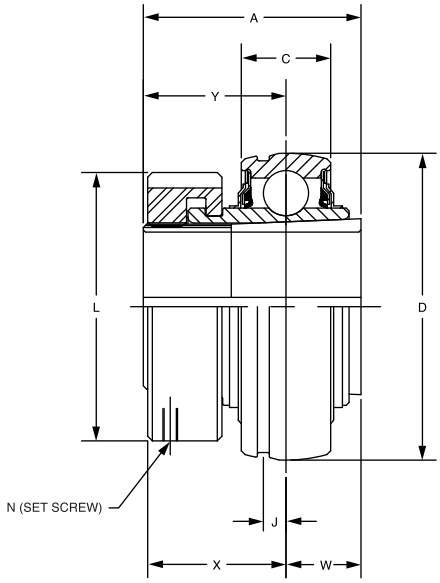

Series	Shaft Size	Complete Unit		Unit without Adapter Sleeve & Lock Nut		Adapter Sleeve & Lock Nut Assembly	
		Part No.	Description	Part No.	Description	Part No.	Description
208	1-1/2	**129786**	INS-GT-108	**129521**	INS-GT-08	**136530**	AN-GT-08-108-D
	1-5/8	**129844**	INS-GT-110			**136592**	AN-GT-08-110-D
	40mm	***129801***	*INS-GT-40M*			***136593***	*AN-GT-08-40M*-D
209	1-5/8	**129787**	INS-GT-110L	**129522**	INS-GT-09	**136531**	AN-GT-09-110L-D
	1-11/16	**129788**	INS-GT-111			**136532**	AN-GT-09-111-D
	1-3/4	**129789**	INS-GT-112			**136533**	AN-GT-09-112-D
	45mm	***129802***	*INS-GT-45M*			***136557***	*AN-GT-09-45M*-D
210	1-15/16	**129790**	INS-GT-115	**129523**	INS-GT-10	**136534**	AN-GT-10-115-D
	2	**129791**	INS-GT-200			**136535**	AN-GT-10-200-D
	50mm	***129803***	*INS-GT-50M*			***136558***	*AN-GT-10-50M*-D
211	2	**129815**	INS-GTM-200	**129524**	INS-GT-11	**136600**	AN-GTM-11-200-D
	2-3/16	**129792**	INS-GT-203			**136536**	AN-GT-11-203-D
	2-1/4	**129845**	INS-GT-204			**136537**	AN-GT-11-204-D
	55mm	***129804***	*INS-GT-55M*			***136559***	*AN-GT-11-55M*-D
212	2-1/4	**129817**	INS-GTM-204	**129525**	INS-GT-12	**136601**	AN-GTM-12-204-D
	2-7/16	**129793**	INS-GT-207			**136538**	AN-GT-12-207-D
	60mm	***129805***	*INS-GT-60M*			***136594***	*AN-GT-12-60M*-D
214	2-1/2	**129819**	INS-GTM-208	**129526**	INS-GT-14	**136548**	AN-GTM-14-208-D
	2-11/16	**129794**	INS-GT-211			**136539**	AN-GT-14-211-D
	70mm	***129806***	*INS-GT-70M*			***136560***	*AN-GT-14-70M*-D
215	2-15/16	**129795**	INS-GT-215	**129527**	INS-GT-15	**136540**	AN-GT-15-215-D
	3	**075681**	INS-GT-300			**136595**	AN-GT-15-300-D
	75mm	***129807***	*INS-GT-75M*			***136596***	*AN-GT-15-75M*-D

@ Assembled to order.



GRIP TIGHT Adapter Ball Bearings
GT NORMAL DUTY BEARING INSERTS

Series	Shaft Size	Weight lbs *kg*	A	C	D	J	L	N SetScrew (UNF)	W#	X	Y#
208	1-1/2 1-5/8 *40mm*	2.2 2.0 *1.0*	1.84 *46.7*	0.87 *22.1*	3.1496 *80.000*	0.22 *5.6*	2.62 *66.5*	#10-32 x 1/4	0.61 *15.5*	1.23 *31.2*	1.23 *31.2*
209	1-5/8 1-11/16 1-3/4 *45mm*	2.5 2.5 2.5 *1.2*	1.85 *47.0*	0.87 *22.1*	3.3465 *85.000*	0.25 *6.4*	2.86 *72.6*	#10-32 x 1/4	0.62 *15.7*	1.26 *32.0*	1.23 *31.2*
210	1-15/16 2 *50mm*	3.0 3.0 *1.4*	1.86 *47.2*	0.87 *22.1*	3.5433 *90.000*	0.25 *6.4*	3.13 *79.5*	#10-32 x 1/4	0.63 *16.0*	1.26 *32.0*	1.23 *31.2*
211	2 2-3/16 2-1/4 *55mm*	3.6 3.4 3.3 *1.6*	1.93 *49.0*	0.87 *22.1*	3.9370 *100.000*	0.25 *6.4*	3.43 *87.1*	#10-32 x 1/4	0.67 *17.0*	1.32 *33.5*	1.26 *32.0*
212	2-1/4 2-7/16 *60mm*	4.8 4.8 *2.2*	2.12 *53.8*	1.02 *25.9*	4.3307 *110.000*	0.25 *6.4*	3.69 *93.7*	#10-32 x 1/4	0.73 *18.5*	1.46 *37.1*	1.39 *35.3*
214	2-1/2 2-11/16 *70mm*	5.4 5.0 *2.5*	2.39 *60.7*	1.10 *27.9*	4.9213 *125.000*	0.26 *6.6*	4.00 *101.6*	#10-32 x 1/4	0.84 *21.3*	1.58 *40.1*	1.55 *39.4*
215	2-15/16 3 *75mm*	5.9 5.7 *2.7*	2.46 *62.5*	1.14 *29.0*	5.1181 *130.000*	0.28 *7.1*	4.44 *112.8*	#10-32 x 1/4	0.86 *21.8*	1.60 *40.6*	1.60 *40.6*

#W & Y dimensions will vary slightly depending on true shaft diameter.

SELECTION/DIMENSIONS

DODGE®



GRIP TIGHT Adapter Ball Bearings
GTM MEDIUM DUTY BEARING INSERTS

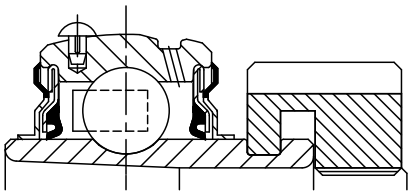

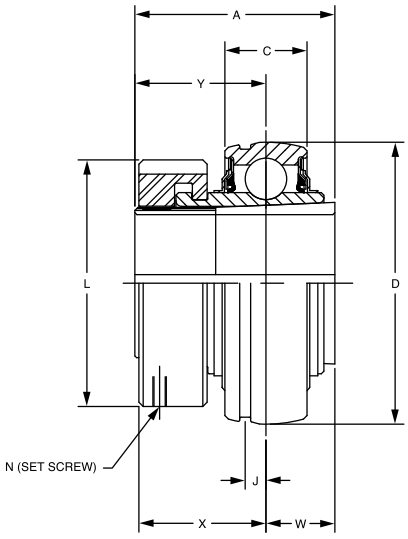

Series	Shaft Size	Complete Unit		Unit without Adapter Sleeve & Lock Nut		Adapter Sleeve & Lock Nut Assembly	
		Part No.	Description	Part No.	Description	Part No.	Description
205	3/4	**129417**	INS-GTM-012	**129518**	INS-GT-05	**136597**	AN-GTM-05-012-D
206	1	**129808**	INS-GTM-100	**129519**	INS-GT-06	**136541**	AN-GTM-06-100-D
	25mm	***129889***	*INS-GTM-25M*			***136561***	*AN-GTM-06-25M-D*
207	1-3/16	**129809**	INS-GTM-103	**129520**	INS-GT-07	**136542**	AN-GTM-07-103-D
	1-1/4	**129783**	INS-GT-104			**136528**	AN-GT-07-104-D
	30mm	***129890***	*INS-GTM-30M*			***136562***	*AN-GTM-07-30M-D*
208	1-7/16	**129810**	INS-GTM-107	**129521**	INS-GT-08	**136543**	AN-GTM-08-107-D
	35mm	***129891***	*INS-GTM-35M*			***136530***	*AN-GTM-08-35M-D*
209	1-1/2	**129811**	INS-GTM-108	**129522**	INS-GT-09	**136563**	AN-GTM-09-108-D
	1-5/8	**129787**	INS-GT-110L			**136598**	AN-GT-09-110L-D
	40mm	***129892***	*INS-GTM-40M*			***136531***	*AN-GTM-09-40M-D*
210	1-11/16	**129812**	INS-GTM-111	**129523**	INS-GT-10	**136564**	AN-GTM-10-111-D
	1-3/4	**129813**	INS-GTM-112			**136544**	AN-GTM-10-112-D
	45mm	***129893***	*INS-GTM-45M*			***136599***	*AN-GTM-10-45M-D*
211	1-15/16	**129814**	INS-GTM-115	**129524**	INS-GT-11	**136545**	AN-GTM-11-115-D
	2	**129815**	INS-GTM-200			**136600**	AN-GTM-11-200-D
	50mm	***129894***	*INS-GTM-50M*			***136566***	*AN-GTM-11-50M-D*
212	2-3/16	**129816**	INS-GTM-203	**129525**	INS-GT-12	**136546**	AN-GTM-12-203-D
	2-1/4	**129817**	INS-GTM-204			**136601**	AN-GTM-12-204-D
	55mm	***129895***	*INS-GTM-55M*			***136567***	*AN-GTM-12-55M-D*
214	2-7/16	**129818**	INS-GTM-207	**129526**	INS-GT-14	**136547**	AN-GTM-14-207-D
	2-1/2	**129819**	INS-GTM-208			**136548**	AN-GTM-14-208-D
	65mm	***129896***	*INS-GTM-65M*			***136568***	*AN-GTM-14-65M-D*
215	2-11/16	**129820**	INS-GTM-211	**129527**	INS-GT-15	**136549**	AN-GTM-15-211-D
	70mm	***129897***	*INS-GTM-70M*			***136569***	*AN-GTM-15-70M-D*
216	2-15/16	**129821**	INS-GTM-215	**129528**	INS-GT-16	**136550**	AN-GTM-16-215-D
	3	**129822**	INS-GTM-300			**136551**	AN-GTM-16-300-D
	75mm	***129898***	*INS-GTM-75M*			***136570***	*AN-GTM-16-75M-D*
218	3-7/16	**129823**	INS-GTM-307	**129529**	INS-GT-18	**136552**	AN-GTM-18-307-D
	3-1/2	**129824**	INS-GTM-308			**136603**	AN-GTM-18-308-D
	85mm	***129899***	*INS-GTM-85M*			***136571***	*AN-GTM-18-85M-D*

@ Assembled to order.

FEATURES/BENEFITS PAGE B5-2 | HOW TO ORDER/NOMENCLATURE PAGE B5-4 | SELECTION PAGE B5-5 | RELATED PRODUCTS PAGE B5-70



GRIP TIGHT Adapter Ball Bearings
GTM MEDIUM DUTY BEARING INSERTS

Series	Shaft Size	Weight lbs *kg*	A	C	D	J	L	N SetScrew (UNF)	W#	X	Y#
205	3/4	0.9	1.46 37.1	0.59 15.0	2.0472 52.000	0.16 4.1	1.80 45.7	#10-32 x 1/4	0.48 12.2	1.00 25.4	0.98 24.9
206	1 *25mm*	1.8 *0.8*	1.61 *40.9*	0.69 *17.5*	2.4409 *62.000*	0.16 *4.1*	2.08 *52.8*	#10-32 x 1/4	0.52 *13.2*	1.13 *28.7*	1.09 *27.7*
207	1-3/16 1-1/4 *30mm*	2.2 1.7 *1.0*	1.62 *41.1*	0.75 *19.1*	2.8346 *72.000*	0.20 *5.1*	2.38 *60.5*	#10-32 x 1/4	0.54 *13.7*	1.14 *29.0*	1.08 *27.4*
208	1-7/16 *35mm*	2.5 *1.1*	1.84 *46.7*	0.87 *22.1*	3.1496 *80.000*	0.22 *5.6*	2.62 *66.5*	#10-32 x 1/4	0.61 *15.5*	1.23 *31.2*	1.23 *31.2*
209	1-1/2 1-5/8 *40mm*	3.0 2.5 *1.1*	1.85 *47.0*	0.87 *22.1*	3.3465 *85.000*	0.25 *6.4*	2.86 *72.6*	#10-32 x 1/4	0.62 *15.7*	1.26 *32.0*	1.23 *31.2*
210	1-11/16 1-3/4 *45mm*	3.0 3.0 *1.4*	1.86 *47.2*	0.87 *22.1*	3.5433 *90.000*	0.25 *6.4*	3.13 *79.5*	#10-32 x 1/4	0.63 *16.0*	1.26 *32.0*	1.23 *31.2*
211	1-15/16 2 *50mm*	3.4 3.3 *1.5*	1.93 *49.0*	0.87 *22.1*	3.9370 *100.000*	0.25 *6.4*	3.43 *87.1*	#10-32 x 1/4	0.67 *17.0*	1.32 *33.5*	1.26 *32.0*
212	2-3/16 2-1/4 *55mm*	4.9 4.8 *2.2*	2.12 *53.8*	1.02 *25.9*	4.3307 *110.000*	0.25 *6.4*	3.69 *93.7*	#10-32 x 1/4	0.73 *18.5*	1.46 *37.1*	1.39 *35.3*
214	2-7/16 2-1/2 *65mm*	5.5 5.4 *2.5*	2.39 *60.7*	1.10 *27.9*	4.9213 *125.000*	0.26 *6.6*	4.00 *101.6*	#10-32 x 1/4	0.84 *21.3*	1.58 *40.1*	1.55 *39.4*
215	2-11/16 *70mm*	5.9 *2.7*	2.46 *62.5*	1.14 *29.0*	5.1181 *130.000*	0.28 *7.1*	4.44 *112.8*	#10-32 x 1/4	0.86 *21.8*	1.60 *40.6*	1.60 *40.6*
216	2-15/16 3 *75mm*	6.9 6.8 *3.2*	2.70 *68.6*	1.18 *30.0*	5.5118 *140.000*	0.29 *7.4*	4.69 *119.1*	#10-32 x 1/4	0.89 *22.6*	1.78 *45.2*	1.81 *46.0*
218	3-7/16 3-1/2 *85mm*	8.8 8.7 *4.0*	2.80 *71.1*	1.34 *34.0*	6.2992 *160.000*	0.30 *7.6*	5.19 *131.8*	#10-32 x 1/4	0.96 *24.4*	1.81 *46.0*	1.84 *46.7*

#W & Y dimensions will vary slightly depending on true shaft diameter.

FEATURES/BENEFITS PAGE B5-2	HOW TO ORDER/NOMENCLATURE PAGE B5-4	SELECTION PAGE B5-5	RELATED PRODUCTS PAGE B5-70

SELECTION/DIMENSIONS

GRIP TIGHT Adapter Ball Bearings
GT AND GTM ADAPTER & LOCK NUT ASSEMBLIES

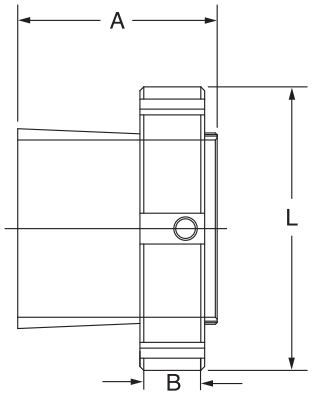

Series	Shaft	Adapter Sleeve & Lock Nut Assembly	
	Size	Part No.	Description
203	1/2	**136588**	AN-GT-03-008-D
	5/8	**136521**	AN-GT-03-010-D
	17mm	***136589***	*AN-GT-03-17M*-D
204	3/4	**136522**	AN-GT-04-012-D
	20mm	***136553***	*AN-GT-04-20M*-D
205	3/4	**136597**	AN-GTM-05-012-D
	7/8	**136590**	AN-GT-05-014-D
	15/16	**136523**	AN-GT-05-015-D
	1	**136524**	AN-GT-05-100-D
	25mm	***136554***	*AN-GT-05-25M*-D
206	1	**136541**	AN-GTM-06-100-D
	1-1/8	**136525**	AN-GT-06-102-D
	1-3/16	**136526**	AN-GT-06-103-D
	1-1/4	**136527**	AN-GT-06-104S-D
	25mm	**136561**	AN-GTM-06-25M-D
	30mm	***136555***	*AN-GT-06-30M*-D
207	1-3/16	**136542**	AN-GTM-07-103-D
	1-1/4	**136528**	AN-GT-07-104-D
	1-3/8	**136591**	AN-GT-07-106-D
	1-7/16	**136529**	AN-GT-07-107-D
	30mm	***136556***	*AN-GTM-07-30M*-D
	35mm	***136562***	*AN-GT-07-35M*-D
208	1-7/16	**136543**	AN-GTM-08-107-D
	1-1/2	**136530**	AN-GT-08-108-D
	1-5/8	**136592**	AN-GT-08-110-D
	35mm	***136563***	*AN-GTM-08-35M*-D
	40mm	***136593***	*AN-GT-08-40M*-D
209	1-1/2	**136598**	AN-GTM-09-108-D
	1-5/8	**136531**	AN-GT-09-110L-D
	1-11/16	**136532**	AN-GT-09-111-D
	1-3/4	**136533**	AN-GT-09-112-D
	40mm	***136564***	*AN-GTM-09-40M*-D
	45mm	***136557***	*AN-GT-09-45M*-D

Series	Shaft	Adapter Sleeve & Lock Nut Assembly	
	Size	Part No.	Description
210	1-11/16	**136544**	AN-GTM-10-111-D
	1-3/4	**136599**	AN-GTM-10-112-D
	1-15/16	**136534**	AN-GT-10-115-D
	2	**136535**	AN-GT-10-200-D
	45mm	***136565***	*AN-GTM-10-45M*-D
	50mm	***136558***	*AN-GT-10-50M*-D
211	1-15/16	**136545**	AN-GTM-11-115-D
	2	**136600**	AN-GTM-11-200-D
	2-3/16	**136536**	AN-GT-11-203-D
	2-1/4	**136537**	AN-GT-11-204-D
	50mm	***136566***	*AN-GTM-11-50M*-D
	55mm	***136559***	*AN-GT-11-55M*-D
212	2-3/16	**136546**	AN-GTM-12-203-D
	2-1/4	**136601**	AN-GTM-12-204-D
	2-7/16	**136538**	AN-GT-12-207-D
	55mm	***136567***	*AN-GTM-12-55M*-D
	60mm	***136594***	*AN-GT-12-60M*-D
214	2-7/16	**136547**	AN-GTM-14-207-D
	2-1/2	**136548**	AN-GTM-14-208-D
	2-11/16	**136539**	AN-GT-14-211-D
	65mm	***136568***	*AN-GTM-14-65M*-D
	70mm	***136560***	*AN-GT-14-70M*-D
215	2-11/16	**136549**	AN-GTM-15-211-D
	2-15/16	**136540**	AN-GT-15-215-D
	3	**136595**	AN-GT-15-300-D
	70mm	***136569***	*AN-GTM-15-70M*-D
	75mm	***136596***	*AN-GT-15-75M*-D
216	2-15/16	**136550**	AN-GTM-16-215-D
	3	**136551**	AN-GTM-16-300-D
	75mm	***136570***	*AN-GTM-16-75M*-D
218	3-7/16	**136552**	AN-GTM-18-307-D
	3-1/2	**136603**	AN-GTM-18-308-D
	85mm	***136571***	*AN-GTM-18-85M*-D

DODGE®



GRIP TIGHT Adapter Ball Bearings
GT AND GTM ADAPTER & LOCK NUT ASSEMBLIES

Series	Shaft Size	Weight lbs *kg*	A	B	L
203	1/2	.3	1.29	0.52	1.40
	5/8	.2			
	17mm	*.1*	*32.8*	*13.2*	*35.6*
204	3/4	.3	1.48	0.58	1.50
	20mm	*.1*	*37.6*	*14.7*	*38.1*
205	3/4	.4	1.46	0.58	1.80
	7/8	.4			
	15/16	.4			
	1	.3			
	25mm	*.1*	*37.1*	*14.7*	*45.7*
206	1	.5	1.61	0.63	2.08
	1-1/8	.4			
	1-3/16	.4			
	1-1/4	.3			
	25mm	*.2*			
	30mm	*.2*	*40.9*	*16.0*	*52.8*
207	1-3/16	.7	1.62	0.63	2.38
	1-1/4	.6			
	1-3/8	.5			
	1-7/16	.5			
	30mm	*.2*			
	35mm	*.2*	*41.1*	*16.0*	*60.5*
208	1-7/16	.8	1.84	0.63	2.62
	1-1/2	.7			
	1-5/8	.5			
	35mm	*.4*			
	40mm	*.3*	*46.7*	*16.0*	*66.5*
209	1-1/2	.9	1.85	0.65	2.86
	1-5/8	.8			
	1-11/16	.7			
	1-3/4	.6			
	40mm	*.4*			
	45mm	*.3*	*47.0*	*16.5*	*72.6*

Series	Shaft Size	Weight lbs *kg*	A	B	L
210	1-11/16	1.1	1.86	0.65	3.13
	1-3/4	1.0			
	1-15/16	.8			
	2	.7			
	45mm	*.5*			
	50mm	*.3*	*47.2*	*16.5*	*79.5*
211	1-15/16	1.4	1.93	0.68	3.43
	2	1.2			
	2 -3/16	.9			
	2 -1/4	.8			
	50mm	*.6*			
	55mm	*.4*	*49.0*	*17.3*	*87.1*
212	2 -3/16	1.6	2.12	0.75	3.69
	2 -1/4	1.5			
	2 -7/16	1.1			
	55mm	*.7*			
	60mm	*.6*	*53.8*	*19.1*	*93.7*
214	2 -7/16	2.2	2.39	0.75	4.00
	2 -1/2	2.0			
	2 -11/16	1.5			
	65mm	*.8*			
	70mm	*.6*	*60.7*	*19.1*	*101.6*
215	2/11/16	3.0	2.46	0.75	4.44
	2-15/16	2.2			
	3				
	70mm	*1.3*			
	75mm	*1.0*	*62.5*	*19.1*	*112.8*
216	2-15/16	3.0	2.70	0.75	4.69
	3	2.8			
	75mm	*1.4*	*68.6*	*19.1*	*119.1*
218	3 -7/16	3.4	2.80	0.83	5.19
	3 -1/2	3.1			
	85mm	*1.7*	*71.1*	*21.1*	*131.8*

RELATED PRODUCTS

Dodge Snap-On End Covers
ENCHANCED SEALING / SAFER WORK ENVIRONMENT

Housing Designed For Snap-On End Cover

GT and GTM bearings contain a machined groove in the housing to accommodate a snap-on style polymer end cover. The end cover provides additional protection from the environment and creates a safer working environment for employees maintaining equipment. The snap-on style end cover incorporates an additional lip on the mounting surface for a more rigid fit within the housing and enhanced sealing. The design is more durable than a blot-on style that uses the grease fitting to secure the cover in place and can be easily knocked off the bearing housings. Closed and open end covers are available.

- Available as a standard feature for GT/GTM
- Machined groove in housing accommodates snap-on style polymer end cover
- Extended lip on the outer diameter of end cover provides a secure fit and positive sealing
- Provides additional layer of protection in harsh environments
- Creates a safer work environment for employees
- OSHA approved yellow
- Closed and open end covers available

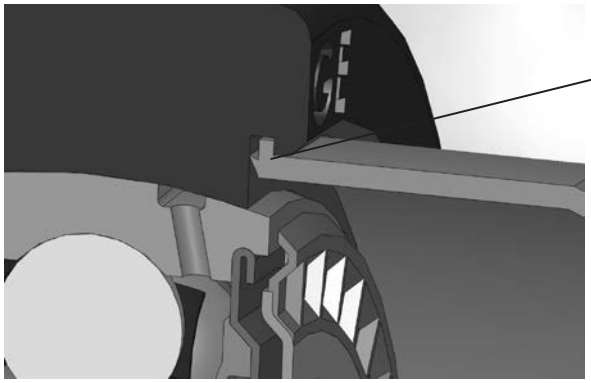

Extended lip provides a secure fit and positive sealing







Extreme Duty Ball Bearing
END CLOSURES

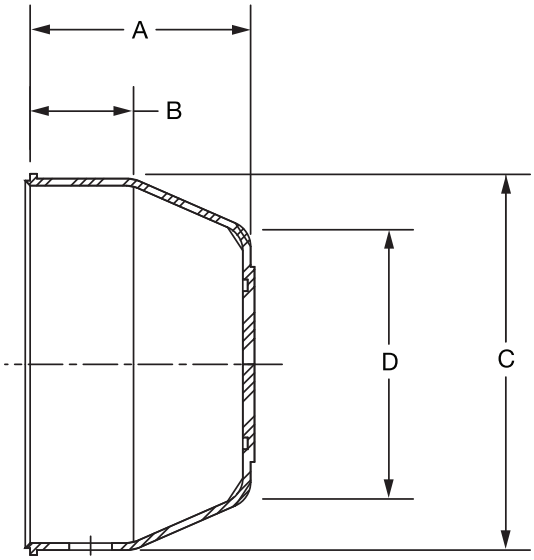

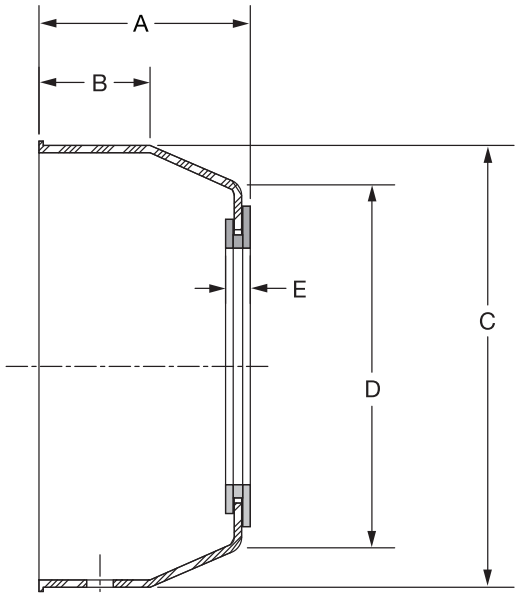

Series	Closed End Closure	
	Part Number	Description
204	**128280**	EC-204-Y
205	**128281**	EC-205-Y
206	**128282**	EC-206-Y
207	**128283**	EC-207-Y
208	**128284**	EC-208-Y
209	**128285**	EC-209-Y
210	**128286**	EC-210-Y
211	**128277**	EC-211-Y
212	**128278**	EC-212-Y

Open End Closure		
Shaft Size	Part Number	Description
3/4	**128350**	ECO-012-Y
20mm	***128363***	*ECO-20M-Y*
1	**128351**	ECO-100-Y
25mm	***128364***	*ECO-25M-Y*
1-3/16	**128352**	ECO-103-Y
1-1/4	**128353**	ECO-104S-Y
30mm	***128365***	*ECO-30M-Y*
1-1/4	**128355**	ECO-104-Y
1-7/16	**128354**	ECO-107-Y
35mm	***128366***	*ECO-35M-Y*
1-1/2	**128356**	ECO-108-Y
40mm	***128367***	*ECO-40M-Y*
1-11/16	**128357**	ECO-111-Y
45mm	***128368***	*ECO-45M-Y*
1-15/16	**128358**	ECO-115-Y
50mm	***128369***	*ECO-50M-Y*

FEATURES/BENEFITS PAGE B5-2 | HOW TO ORDER/NOMENCLATURE PAGE B5-4 | SELECTION PAGE B5-5 | SELECTION/DIMENSIONS PAGE B5-8

RELATED PRODUCTS



Open Cover Extreme Duty Dimensions

Series	Shaft Size	A	B	C	D	E
204	3/4	1-3/16	17/32	1-29/32	1-3/8	3/16
	20mm	*30.2*	*13.5*	*48.4*	*35.1*	*4.9*
205	1	1-1/4	17/32	2-11/64	1-39/64	3/16
	25mm	*31.8*	*13.5*	*55.1*	*40.9*	*4.9*
206	1-3/16 1-1/4	1-25/64	9/16	2-1/2	31/32	3/16
	30mm	*35.3*	*14.2*	*63.5*	*50.0*	*4.9*
207	1-1/4 1-7/16	1-17/32	11/16	2-29/32	2-5/16	3/16
	35mm	*38.9*	*17.5*	*73.9*	*58.9*	*4.9*
208	1-1/2	1-19/32	11/16	3-5/16	2-49/64	13/64
	40mm	*40.6*	*17.5*	*84.1*	*70.1*	*5.1*
209	1-11/16	1-21/32	23/32	3-1/2	2-7/8	13/64
	45mm	*41.9*	*18.3*	*88.9*	*72.9*	*5.1*
210	1-15/16	1-23/32	29/32	3-5/8	3	13/64
	50mm	*43.7*	*23.1*	*91.4*	*76.2*	*5.1*

Closed Cover Extreme Duty Dimensions

Series	A	B	C	D
204	1-1/8	17/32	1-29/32	1-3/8
	28.7	13.5	48.4	35.1
205	3/16	17/32	2-11/64	1-39/64
	30.2	13.5	55.1	40.9
206	1-21/64	9/16	2-½	31/32
	33.8	14.2	63.5	50.0
207	1-15/32	11/16	2-29/32	2-5/16
	37.3	17.5	73.9	58.9
208	1-35/64	11/16	3-5/16	2-49/64
	39.1	17.5	84.1	70.1
209	1-19/32	23/32	3-½	2-7/8
	40.4	18.3	88.9	72.9
210	1-21/32	29/32	3-5/8	3
	42.2	23.1	91.4	76.2
211	1-51/64	31/32	3-15/16	3-19/64
	45.5	24.6	100.1	83.6
212	1-29/32	1	4-3/8	3-21/32
	48.3	25.4	111.3	92.7



DODGE Ball Bearing End Covers

- Fits DODGE cast iron housed ball bearings: Pillow Blocks, 2 and 4-Bolt flanges, and Take-Up bearings
- Injected molded, impact resistant, OSHA safety yellow end covers meet requirements for exposed rotating shafts
- Stainless steel “C” washer for gripping power
- No modification or machining of existing housings required
- Concentric knockout grooves on inside of end cover for thru-shaft
- DODGE six digit part number and description embossed inside
- Operating temperature to 250˚ F
- For no relubrication/sealed for life applications (-NL), part number **430020** hex head plug is available



Nomenclature

EC - **205** - **P**

- P: “Blank” Fits all housing styles as noted. P - Pillow blocks, including tapped base. X - All other housing styles as noted
- 205: ISO & ABMA ring size
- EC: End Cover

Series	Pillow Blocks Std, U, B	Tapped Base PB	2-Bolt Flange	Flanged Bracket	4-Bolt Flange	Piloted Flange (FC)	Narrow Slot Take-Up	Wide Slot Take-Up
203	X		X		X			
204	X	X	X	X	X		X	X
205	X	X	X	X	X		X	X
206	X	X	X	X	X	@	X	X
207	X	X	X	X	X	@	X	X
208	X	X	X		X	@	X	X
209	X	X	X		X	@	X	X
210	X	X	X	X	X	@	X	X
211	X	X	X		X	NA	X	X
212	X		X		X	NA	X	X
214	X				X	NA		X
215	X				X			X
216	X				X	X		X
218	X				X	X		

* = Will not fit LF, LFT, SCHB, HNGR & CYL
@ = Some modification required
NA = Will not fit
X = Will fit

FEATURES/BENEFITS PAGE B5-2 | HOW TO ORDER/NOMENCLATURE PAGE B5-4 | SELECTION PAGE B5-5 | SELECTION/DIMENSIONS PAGE B5-8

RELATED PRODUCTS

Thin Wall Adapter Ball Bearings

BALL BEARING END COVERS FOR PILLOW BLOCKS & TAPPED BASE UNITS

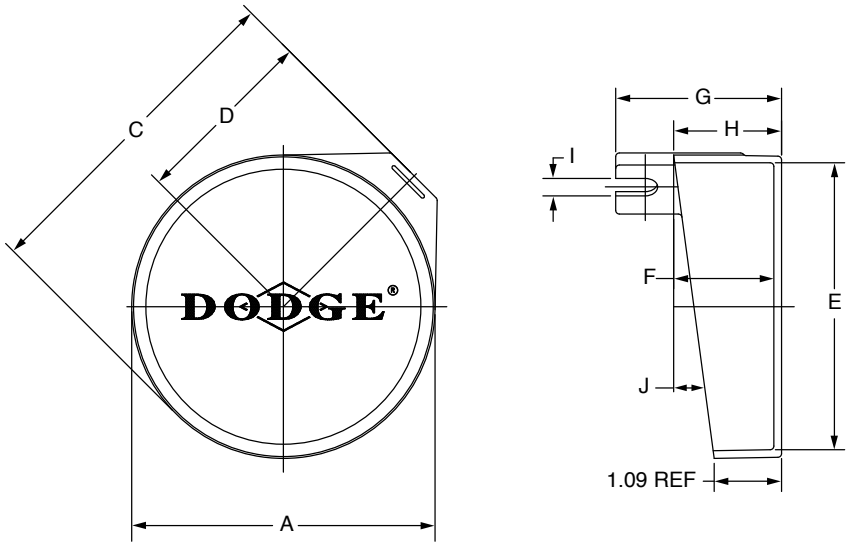

Series	Shaft Size		Part Number	Description
	GT	GTM		
203	1/2 & 5/8 *17mm*	- - - - -	**128200**	EC-203-P
204	1/2 - 3/4 *20mm*	- - - - -	**128202**	EC-204-P
205	7/8 - 1 *25mm*	- - - - -	**128204**	EC-205-P
206	1-1/16 - 1-1/4 *30mm*	1 *25mm*	**128206**	EC-206-P
207	1-1/4 -1-7/16 *35mm*	1-3/16 -1-1/4 *30mm*	**128208**	EC-207-P
208	1-1/2 &1-5/8 *40mm*	1-7/16 *35mm*	**128210**	EC-208-P
209	1-5/8 -1-3/4 *45mm*	1-1/2 *40mm*	**128212**	EC-209-P
210	1-15/16 & 2 *50mm*	1-11/16 &1-3/4 *45mm*	**128214**	EC-210-P
211	2 - 2-1/4 *55mm*	1-15/16 & 2 *50mm*	**128216**	EC-211-P
212	2-1/4 & 2-7/16 *60mm*	2-3/16 & 2-1/4 *55mm*	**128218**	EC-212-P

For no re-lube (-NL) applications, part number **430020**, hex head plug is available



Thin Wall Adapter Ball Bearings
BALL BEARING END COVERS FOR PILLOW BLOCKS & TAPPED BASE UNITS

Series	Shaft Size		Weight lbs *gm*	A	B	C	D	E	F	G	H	I	J
	GT	GTM											
203	1/2 & 5/8 *17mm*	- - - - -	0.02 *10*	1-25/32 *45.2*	1-43/64 *42.5*	2-7/64 *53.6*	1-3/32 *27.8*	1-41/64 *41.7*	49/64 *19.4*	1-29/64 *36.9*	29/32 *23.0*	1/4 *6.4*	9º
204	1/2 - 3/4 *20mm*	- - - - -	0.03 *15*	2-3/64 *52.0*	1-27/32 *46.8*	2-37/64 *65.5*	1-19/64 *32.9*	1-55/64 *47.2*	1-1/64 *25.8*	1-49/64 *44.8*	1-5/32 *29.4*	5/16 *7.9*	11º
205	7/8 - 1 *25mm*	- - - - -	0.05 *24*	2-3/8 *60.3*	2-3/16 *55.6*	2-13/16 *71.4*	1-3/16 *30.2*	2-5/32 *54.8*	1-1/16 *27.0*	1-7/8 *47.6*	1-7/32 *31.0*	11/32 *8.7*	9º
206	1-1/16 -1-1/4 *30mm*	1 *25mm*	0.08 *36*	2-47/64 *69.5*	2-17/32 *64.3*	3-21/64 *84.5*	1-45/64 *43.3*	2-1/2 *63.5*	1-15/64 *31.4*	2-5/32 *54.8*	1-13/32 *35.7*	23/64 *9.1*	9º
207	1-1/4 -1-7/16 *35mm*	1-3/16 -1-1/4 *30mm*	0.12 *53*	3-1/4 *82.6*	3 *76.2*	3-51/64 *96.4*	1-29/32 *48.4*	3-1/64 *76.6*	1-5/16 *33.3*	2-11/32 *59.5*	1-31/64 *37.7*	3/8 *9.5*	7º 30'
208	1-1/2 &1-5/8 *40mm*	1-7/16 *35mm*	0.14 *64*	3-3/8 *85.7*	3-1/8 *79.4*	4 *101.6*	2-1/16 *52.4*	3-7/64 *79.0*	1-19/64 *32.9*	2-13/16 *71.4*	1-1/2 *38.1*	27/64 *10.7*	6º
209	1-5/8 -1-3/4 *45mm*	1-1/2 *40mm*	0.16 *73*	3-11/16 *93.7*	3-15/32 *88.1*	4-17/64 *108.3*	2-11/64 *55.2*	3-13/32 *86.5*	1-21/64 *33.7*	2-21/64 *59.1*	1-17/32 *38.9*	25/64 *9.9*	7º
210	1-15/16 & 2 *50mm*	1-11/16 &1-3/4 *45mm*	0.18 *82*	3-7/8 *98.4*	3-37/64 *90.9*	4-1/2 *114.3*	2-19/32 *65.9*	3-37/64 *90.9*	1-23/64 *34.5*	2-1/2 *63.5*	1-9/16 *39.7*	31/64 *12.3*	9º
211	2 - 2-1/4 *55mm*	1-15/16 & 2 *50mm*	0.24 *108*	4-27/64 *112.3*	4 *101.6*	5-1/16 *128.6*	2-19/32 *65.9*	4-1/8 *104.8*	1-13/32 *35.7*	2-37/64 *65.5*	1-5/8 *41.3*	29/64 *11.5*	7º
212	2-1/4 & 2-7/16 *60mm*	2-3/16 & 2-1/4 *55mm*	0.27 *124*	4-59/64 *125.0*	4-15/32 *113.5*	5 29/64 *138.5*	2-3/4 *69.9*	4-39/64 *117.1*	1-17/32 *38.9*	2-11/16 *68.3*	1-3/4 *44.5*	13/32 *10.3*	8º

SELECTION/DIMENSIONS

Thin Wall Adapter Ball Bearings

BALL BEARING END COVERS FOR MOUNTED UNITS OTHER THAN PILLOW BLOCKS & TAPPED BASE UNITS

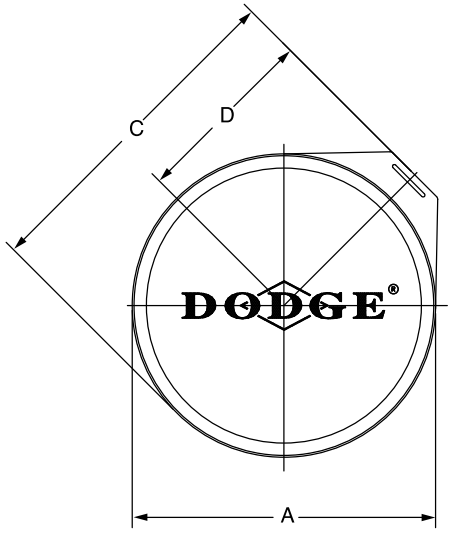

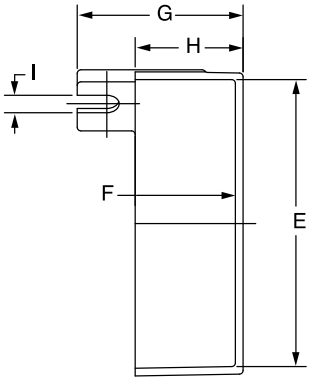

Series	Shaft Size		Part Number	Description
	GT	GTM		
203	1/2 & 5/8 *17mm*	- - - - -	**128201**	EC-203-X
204	1/2 - 3/4 *20mm*	- - - - -	**128203**	EC-204-X
205	7/8 - 1 *25mm*	- - - - -	**128205**	EC-205-X
206	1-1/16 -1-1/4 *30mm*	1 *25mm*	**128207**	EC-206-X
207	1-1/4 -1-7/16 *35mm*	1-3/16 -1-1/4 *30mm*	**128209**	EC-207-X
208	1-1/2 &1-5/8 *40mm*	1-7/16 *35mm*	**128211**	EC-208-X
209	1-5/8 -1-3/4 *45mm*	1-1/2 *40mm*	**128213**	EC-209-X
210	1-15/16 & 2 *50mm*	1-11/16 &1-3/4 *45mm*	**128215**	EC-210-X
211	2 - 2-1/4 *55mm*	1-15/16 & 2 *50mm*	**128217**	EC-211-X
212	2-1/4 & 2-7/16 *60mm*	2-3/16 & 2-1/4 *55mm*	**128219**	EC-212-X

Note: Above end covers will not fit the LF and LFT bearings
For no re-lube (-NL) applications, part number **430020**, hex head plug is available



Thin Wall Adapter Ball Bearings

BALL BEARING END COVERS FOR MOUNTED UNITS OTHER THAN PILLOW BLOCKS & TAPPED BASE UNITS

Series	Shaft Size		Weight lbs gm	A	B	C	D	E	F	G	H	I
	GT	GTM										
203	1/2 & 5/8 *17mm*	- - - - -	0.02 *10*	1-51/64 *45.6*	1-43/64 *42.5*	2-13/64 *56.0*	1-3/16 *30.2*	1-41/64 *41.7*	51/64 *20.2*	1-29/64 *36.9*	15/16 *23.8*	1/4 *6.4*
204	1/2 - 3/4 *20mm*	- - - - -	0.03 *15*	2-7/32 *56.4*	2 *50.8*	2-47/64 *69.5*	1-25/64 *35.3*	2-1/32 *51.6*	1-1/64 *25.8*	1-13/16 *46.0*	1-5/32 *29.4*	5/16 *7.9*
205	7/8 - 1 *25mm*	- - - - -	0.05 *24*	2-3/8 *60.3*	2-3/16 *55.6*	3-3/64 *77.4*	1-19/32 *40.5*	2-5/32 *54.8*	1-1/64 *25.8*	1-53/64 *46.4*	1-11/64 *29.8*	11/32 *8.7*
206	1-1/16 -1-1/4 *30mm*	1 *25mm*	0.08 *36*	2-47/64 *69.5*	2-17/32 *64.3*	3-21/64 *84.5*	1-45/64 *43.3*	2-1/2 *63.5*	1-3/16 *30.2*	2-1/16 *52.4*	1-23/64 *34.5*	23/64 *9.1*
207	1-1/4 -1-7/16 *35mm*	1-3/16 -1-1/4 *30mm*	0.12 *53*	3-1/4 *82.6*	3 *76.2*	3-27/32 *97.6*	1-31/32 *50.0*	3-1/64 *76.6*	1-11/32 *34.1*	2-11/32 *59.5*	1-17/32 *38.9*	3/8 *9.5*
208	1-1/2 &1-5/8 *40mm*	1-7/16 *35mm*	0.14 *64*	3-3/8 *85.7*	3-1/8 *79.4*	4 *101.6*	2-1/16 *52.4*	3-7/64 *79.0*	1-19/64 *32.9*	2-13/32 *61.1*	1-1/2 *38.1*	27/64 *10.7*
209	1-5/8 -1-3/4 *45mm*	1-1/2 *40mm*	0.16 *73*	3-11/16 *93.7*	3-15/32 *88.1*	4-17/64 *108.3*	2-11/64 *55.2*	3-13/32 *86.5*	1-23/64 *34.5*	2-21/64 *59.1*	1-17/32 *38.9*	25/64 *9.9*
210	1-15/16 & 2 *50mm*	1-11/16 &1-3/4 *45mm*	0.18 *82*	3-7/8 *98.4*	3-37/64 *90.9*	4-1/2 *114.3*	2-21/64 *59.1*	3-9/16 *90.5*	1-23/64 *34.5*	2-33/64 *63.9*	1-9/16 *39.7*	31/64 *12.3*
211	2 - 2-1/4 *55mm*	1-15/16 & 2 *50mm*	0.24 *108*	4-27/64 *112.3*	4 *101.6*	5-1/16 *128.6*	2-19/32 *65.9*	4-1/8 *104.8*	1-29/64 *36.9*	2-37/64 *65.5*	1-21/32 *42.1*	29/64 *11.5*
212	2-1/4 & 2-7/16 *60mm*	2-3/16 & 2-1/4 *55mm*	0.27 *124*	4-59/64 *125.0*	4-15/32 *113.5*	5 15/32 *138.9*	2-3/4 *69.9*	4-39/64 *117.1*	1-35/64 *39.3*	2-11/16 *68.3*	1-3/4 *44.5*	13/32 *10.3*

FEATURES/BENEFITS PAGE B5-2	HOW TO ORDER/NOMENCLATURE PAGE B5-4	SELECTION PAGE B5-5	RELATED PRODUCTS PAGE B5-70

RELATED PRODUCTS

Thin Wall Adapter Ball Bearings

BALL BEARING END COVERS FOR MOUNTED UNITS 214 SERIES AND LARGER

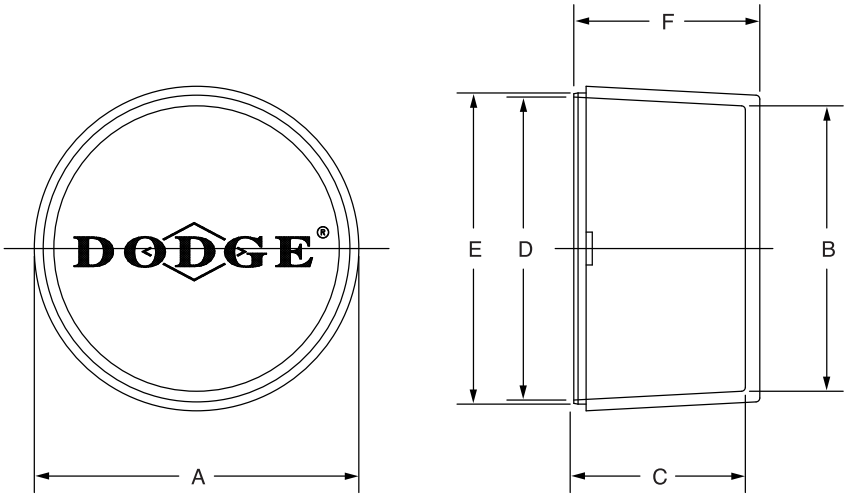

Series	Shaft Size		Part Number	Description
	GT	GTM		
214	2-11/16 *70mm*	2-7/16 & 2-1/2 *65mm*	**128220**	EC-214
215	2-15/16 *75mm*	2-11/16 *70mm*	**128221**	EC-215
216	- - - - -	2-15/16 & 3 *75mm*	**128222**	EC-216
218	- - - - - *90mm*	3-7/16 & 3-1/2 *85mm*	**128223**	EC-218

Series	Shaft Size		Weight lbs gm	A	B	C	D	E		F
	GT	GTM						min.	max	
214	2-11/16 *70mm*	2-7/16 & 2-1/2 *65mm*	0.33 *151*	4-15/16 *125.4*	4-11/32 *110.3*	2-39/64 *66.3*	4-39/64 *117.1*	4.737 *120.3*	4.741 *120.4*	2-53/64 *71.8*
215	2-15/16 *75mm*	2-11/16 *70mm*	0.36 *164*	5-3/32 *129.4*	4-31/64 *113.9*	2-29/64 *62.3*	4-3/4 *120.7*	4.940 *125.5*	4.944 *125.6*	2-7/8 *73.0*
216	- - - - -	2-15/16 & 3 *75mm*	0.44 *201*	5-9/16 *141.3*	4-59/64 *125.0*	2-47/64 *69.5*	5-13/64 *132.2*	5.346 *135.8*	5.350 *135.9*	2-63/64 *75.8*
218	- - - - - *90mm*	3-7/16 & 3-1/2 *85mm*	0.57 *257*	6-5/16 *160.3*	5-41/64 *143.3*	2-27/32 *72.2*	5-15/16 *150.8*	6.096 *154.8*	6.100 *154.9*	3-3/32 *78.6*

CONTENTS

D-LOK™ Ball Bearings

Features / Benefits B6-3
How to Order / Nomenclature B6-5
Selection B6-6
Selection/Dimensions
- Pillow Blocks
  - DL Normal Duty B6-10
  - DLM Medium Duty B6-18
  - Tapped Base B6-22
  - CC DL Fan and Blower B6-24
- Flanges
  - 2-Bolt Flange B6-26
  - 3-Bolt Flange B6-32
  - 4-Bolt Flange B6-34
  - Piloted Flange B6-38
- Take-Ups
  - Narrow Slot B6-42
  - Wide Slot B6-46
  - Top Angle B6-50
- DL Normal Duty Hanger, Screw Conveyor Hanger & Cylindrical Units B6-52
- Inserts
  - DL Normal Duty B6-54
  - DLM Normal Duty B6-58
  - Fan and Blowers B6-60

Modifications/Accessories B6-64
Related Products
- End Closures B6-62

Part Number Index Index-1
Key Word Index Index-69

CONTENTS



FEATURES/BENEFITS

D-LOK™ Ball Bearings

For concentric grip on the shaft and less vibration at higher speeds, specify DODGE D-LOK normal- or medium-duty mounted ball bearings.

These unique, concentric collar bearings are engineered with features that assure you superior holding power with improved concentricity.

Even at high speeds, the D-LOK bearing grips the shaft tighter and more uniformly for less vibration.

Manufactured at our state-of-the-art, ISO 9002 certified DODGE bearing plant. The new DODGE D-LOK bearing features:

- Precision-hardened and honed inner and outer rings
- New rugged housing design
- Normal-duty wide inner ring
- D-LOK locking mechanism
- DODGE DualGuard positive contact seal including rubberized flingers
- Stronger, flexible ball retainer
- Simplified anti-rotation device
- Wide variety of styles
- 3/4" to 3-7/16" (20 to 70mm) bore sizes
- Electrostatically applied epoxy paint
- Options:
  - Corrosion-resistant inserts
  - FDA/USDA lubricant and other special lubricants
  - High temperature

DODGE End Covers

Available from stock to fit DL and DLM mounted units, these end covers are designed for added protection from containments as well as for OSHA requirements. Covers are OSHA yellow.



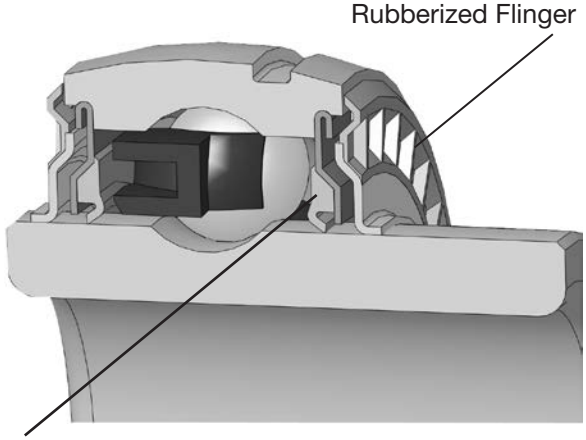

D-LOK Concentric Clamp Collar

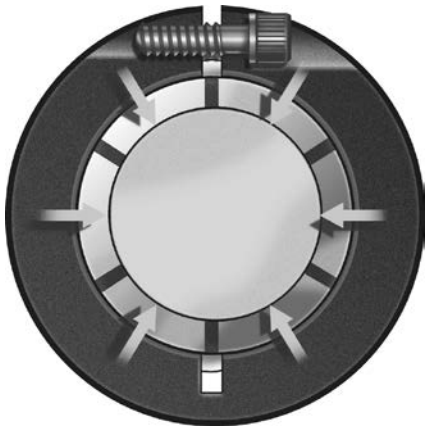

The D-LOK concentric clamp collar, with a single standard hex head cap screw and relief slot, provides greater holding power over competitive products. The collar, installed over the slotted inner ring, locks the bearing on the shaft concentrically without marring or burring and provides a 360° clamping force to the shaft with minimal run out (T.I.R.) for less vibration.

Patent number 5417500

DualGuard Seal

- Mechanically retained single lip seal for added strength
  - Purgeable design
  - Nitrile rubber lip
  - Keeps out contaminants
- Rubberized flinger
  - Dodge-only technology
  - Rubberized flinger provides external protection and discards contaminants as it rotates
  - Molded baffles in flinger act like a paddle wheel to help deflect liquids
  - Molded rubber increases the acceleration rate of the contaminants as they are thrown away from the bearing.

Note: Instruction manuals and drawings for Dodge bearings are available on www.dodge-pt.com

FEATURES/BENEFITS

D-LOK™ Ball Bearings

NON-METALLIC RETAINER



Ball cage is made of heat-stabilized nylon, reinforced with 33% short strand fiberglass. This non-metallic container operates in higher temperatures with less water absorption and retains natural lubricity and flexibility.

ANTI-ROTATION PIN

Anti-rotation pin prevents rotation of the outer ring within the housing.

Simple and effective, it makes system inserts easier to replace. There is no need to remove and replace grease fittings, location pins or other devices.



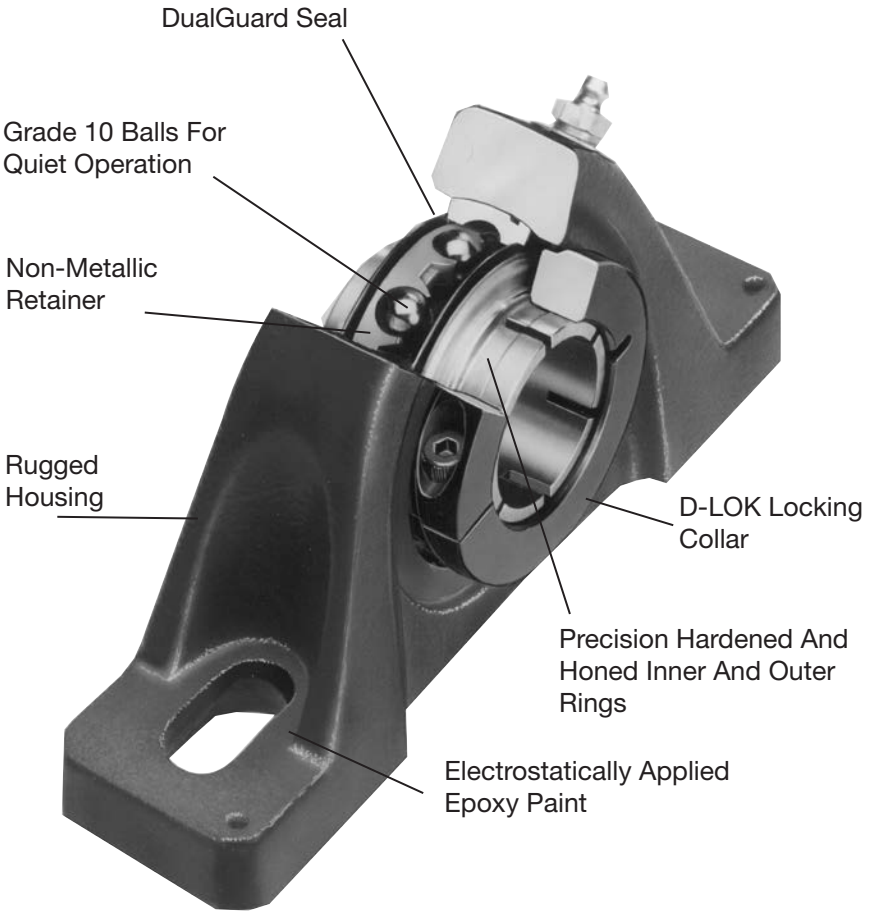

EXPANSION AND NON-EXPANSION MODELS

A complete series of expansion and non-expansion pillow blocks and bearing inserts are available, these all have the standard features of our D-LOK, plus a specially engineered retainer to meet the operating conditions where these bearings are required.

RUGGED HOUSING DESIGN

Rugged housing design offers added strength. Solid feet are drilled for dowel pins - simplifies installation, alignment.

WIDE VARIETY OF STYLES

Normal Duty

- DL PILLOW BLOCKS
- DLB PILLOW BLOCKS
- DLH-E PILLOW BLOCKS
- DL Tapped Base Pillow Blocks
- DL 2-Bolt Flanges
- DL Flanged Bracket Bearings
- DL 4-Bolt Flanges
- DL Piloted Flanges
- DL Take-Up Bearings
- DL Screw Conveyor Hanger Bearings
- DL Inserts

Medium Duty

- DLM Pillow Blocks
- DLM 2-Bolt Flanges
- DLM 4-Bolt Flanges
- DLM Piloted Flanges
- DLM Take-Up Bearings
- DLM Inserts

IN STOCK NEAR YOU

The complete line of DODGE mounted ball bearings is available at your local authorized DODGE distributor. For more information, check the Yellow Pages for your local distributor, call (864) 297-4800, or fax (864) 281-2318.

Note: Instruction manuals and drawings for Dodge bearings are available on www.dodge-pt.com



D-LOK Ball Bearings

HOW TO ORDER

There are two ways to specify DODGE Bearings. Most of the product offerings have part numbers with listings shown throughout this catalog. Use of part numbers ensures accurate order processing.

When part numbers are not shown, the product may be specified by description or part name. This method is used when ordering units that include modifications or options. To order by description, use the nomenclature shown below and add any special instruction to the end of the description for options not covered by the nomenclature.

P2B - DL - 104S - NL

Modification or feature:
- CR = Corrosion resistant insert
- E = Expansion (used with SCH, SXRH, or DLH)
- HT = High temperature option (400 degrees F maximum)
- LL = Low torque labyrinth seal
- MOD = Modified
- NL = No Lube (sealed for life)
- P = Polymer housing
- SH = Stainless Steel Housing

Shaft size

Inches:
- First digit = Number of inches
- Second & third digits = Number of sixteenths of an inch
  - 104 = Indicates 1-4/16 or 1-1/4
- S = Next smaller ring size. E.g. 1-1/4 206 would be written as 104S
- L = Next larger ring size. E.g. 1-5/8 209 would be written as 110L

Metric:
- First two digits = number of millimeters
- M = Metric

Bearing type:
- DL = Wide inner ring, normal duty, concentric clamp collar
- DLM = Wide inner ring, medium duty, concentric clamp collar

Suffixes to the above:
- AH = Air handling
- B = Low backing height pillow block
- EZ = EZ-KLEEN (used with polymer or stainless steel housed units)
- H = High backing height (used with expansion pillow blocks)
- ED = Extreme Duty

Housing:
- CYL = Cylindrical unit
- F2B = 2-bolt flange
- F2BZ = 2-bolt flange with pilot machined on the back side (used with metric D-LOK bearings)
- F4B = 4-bolt flange
- FB = Flanged bracket
- FC = Flanged cartridge (piloted flange)
- HNG = Hanger bearing
- INS = Insert
- LF = Light duty flange, 3-bolt, with square bolt holes
- LFT = Light duty flange, 2-bolt, with square bolt holes
- NSTU = Narrow slot take-up
- P2B = Pillow block, 2-bolt base
- SCHB = Screw conveyor hanger bearing
- TB = Tapped base pillow block
- TP = Top angle take-up
- WSTU = Wide slot take-up

SELECTION



D-LOK Ball Bearings

Recommended Torque													
Setscrews					D-LOK			Mounting Bolts					
		Recommended Torque						Metal Housings		EZ-KLEEN Housed Bearings			
Setscrew Size	Key Hex Across Flats	Standard Ball Bearing Insert		Corrosion Resistant Stainless Steel	Cap Screw Size	Recom. Torque	EZ-KLEEN Recom. Torque	Bolt Size	Recom. Dry Torque (Grade 2)	2-Bolt PB, 2 & 4 Bolt Fig. and Flg. Brackets		Tapped Base PB	
		Min	Max							Bolt Size	Torque ①	Bolt Size	Torque ②
(in.)	(in.)	(in-lbs.)	(in.-lbs.)	(in.-lbs.)	(in.)	(in.0lbs.)	(in.-lbs.)	(in.)	(in.0lbs.)	(in.)	(in.-lbs.)	(in.)	(in.lbs.)
#10	3/32	28	33	25	#8-32	58	46	3/8-16	240	3/8-16	225	3/8-16	175
1/4	1/8	66	80	60	#10-32	90	72	7/16-14	384	7/16-14	350	7/16-14	350
5/16	5/32	126	156	117	1/4-28	180	144	1/2-13	600	1/2-13	500	1/2-13	400
3/8	3/16	228	275	206	5/16-24	400	320	5/8-11	1200	9/16-12	650		
7/16	7/32	342	428	321	3/8-24	750	600	3/4-10	1950	5/8-11	1000		
								7/8-9	2890				
(mm)	(mm)	(N-m)	(N-m)	(N-m)	(mm)	(N-m)	(N-m)	(mm)	(N-m)	(mm)	(N-m)	①Torque for Austenitic (18-8) Stainless ②Max. torque values published. Do not exceed	
M5	2.5	3.2	3.7	2.8	M4	585	4.68	M10	29	M8	15		
M6	3	6.2	7.7	5.8	M5	10.75	8.6	M12	50	M10	25		
M8	4	14.2	17.8	13.4	M6	20.5	16.4	M16	124	M12	50		
M10	5	26	31	23	M8	45	36	M20	238	M14	75		
M12	6	46	57	43				M22	322	M18	125		

Lubrication

High Speed Operation - In the higher speed ranges, too much grease will cause over-heating. The amount of grease that the bearing will take for a particular high speed application can only be determined by experience. If excess grease in the bearing causes overheating, it will be necessary to remove grease fitting to permit excess grease to escape. The bearing has been greased at the factory and is ready to run. When establishing a relubrication schedule, note that a small amount of grease at frequent intervals is preferable to a large amount at infrequent intervals.

Lubrication Guide

Use a No. 2 Lithium complex base grease or equivalent*

Hours Run per Day	Suggested Lubrication Period in Weeks							
	1 to 250 RPM	251 to 500 RPM	501 to 750 RPM	751 to 1000 RPM	1001 to 1500 RPM	1501 to 2000 RPM	2001 to 2500 RPM	2501 to 3000 RPM
8	12	12	10	7	5	4	3	2
16	12	7	5	4	2	2	1	1
24	10	5	3	2	1	1	1	1

* For EZ-KLEEN series bearings, use an aluminum complex base grease.

Lubrication recommendations are intended for standard products applied in general operating conditions. For modified products, high temperature applications, and other anomalous applications contact product engineering at 864-284-5700.

Note: Bearing analysis program "BEST" is available on www.ptwizard.com



D-LOK Ball Bearings

DODGE mounted ball bearings are primarily designed for radial loading. However, they have the capacity to carry thrust loads and combined radial/thrust loads. The maximum recommended load which can be applied is limited by various components in the system, such as bearing, housing, shaft attachments, speed and life requirements. DODGE mounted ball bearings have been applied successfully when these limits have been exceeded under controlled operating conditions. Contact DODGE Engineering for applications which exceed these recommendations.

Select a bearing from the Selection Chart that has a radial load rating at the operating speed equal to or greater than the calculated Equivalent Radial load for a desired L_{10} life. This simple method is all that is required for the majority of general applications and provides for occasional average shock loads.

L_{10} Hours Life-is the life which may be expected for at least 90% of a given group of bearings operating under identical conditions. For an L_{10} hours life other than those listed in the Selection Chart, multiply the equivalent Radial load by one of the following factors. For 50,000 L_{10} hours life, use a factor of 1.18 and for 80,000, use 1.39. Then select a bearing from the bold face (30,000) L_{10} ratings only in the Selection Chart that has a rating equal to or greater than this value.

Heavy Service-For heavy shock loads, frequent shock loads or severe vibrations, add up to 50% (according to severity of conditions) to the Equivalent Radial Load to obtain a Modified Equivalent Radial Load. Consult Application Engineering for additional selection assistance.

A thrust load value of C/10 is recommended as a guide for general applications and will give adequate L_{10} life. Where substantial radial load pulls the housing away from the mounting base, both the hold-down bolts and housing must be of adequate strength. Auxiliary load carrying devices, such as sheer bars, are advisable for side or end-loading of pillow blocks and radial loads for flange units.

To determine the L_{10} hours life for loads and RPM's not listed use the following equation:

$$L_{10} = \left(\frac{C}{P}\right)^3 \times \frac{16{,}667}{N}$$

Where:

L_{10} = Life, hours

C = Dynamic Capacity, lbs. or N

P = Equivalent Radial Load, lbs. or N

N = Revolutions per minute

When the load on a ball bearing is solely a radial load with no thrust (axial) load, the Equivalent Radial Load (P) is equal to the actual radial load. However, when a thrust (axial) load is applied, the radial and thrust loads applied must be converted into an Equivalent Radial Load. The use of the X (radial factor) and Y (thrust factor) from Table 1 convert the actual applied thrust and radial loads to an Equivalent Radial Load which has the same effect on the life of a bearing as a radial load of this magnitude.

$$P = (X \times F_R) + (Y \times F_A)$$

Where:

P = Equivalent Radial Load, lbs.
F_R = Radial load, lbs.
F_A = Thrust load, lbs.
e = Thrust load to radial load factor (Table 1)
X = Radial load factor (Table 1)
Y = Thrust factor (Table 1)
C_O = Basic static capacity

To find X and Y, first calculate F_A/C_O to determine e. Calculate F_A/F_R and compare to e to determine the X and Y factors to use from Table 1.

Substitute all known values into the Equivalent Radial Load equation. The Equivalent Radial loads (P) thus determined can be used in the L_{10} life formula or compared to the allowable Equivalent Radial Load rating desired in the expanded rating chart to select a bearing (Table 2).

If calculated value of P is less than F_R, use $P=F_R$.

Table 1

F_A / C_o	e	Radial/thrust Factors			
		If F_A/F_R is equal to or less than e		If F_A/F_R is greater than e	
		F_A/F_R < = e		F_A/F_R > e	
		X	Y	X	Y
0.014	0.19	1	0	0.56	2.30
0.021	0.21	1	0	0.56	2.15
0.028	0.22	1	0	0.56	1.99
0.042	0.24	1	0	0.56	1.85
0.056	0.26	1	0	0.56	1.71
0.070	0.27	1	0	0.56	1.63
0.084	0.28	1	0	0.56	1.55
0.110	0.30	1	0	0.56	1.45
0.170	0.34	1	0	0.56	1.31
0.280	0.38	1	0	0.56	1.15
0.420	0.42	1	0	0.56	1.04
0.560	0.44	1	0	0.56	1.00

Lubrication-DODGE Ball Bearings are lubricated at the factory and are ready to run. The bearings are initially lubricated with a lithium complex grease and should be relubricated with the same or some equivalent. For high speeds, high loads, extreme temperatures and other abnormal operating conditions, special greases may be required. Contact DODGE Application Engineering for recommendations on these types of applications.

Misalignment-DODGE Ball Bearings are designed to allow a maximum of ±2° static misalignment. These bearings are not suitable for dynamic misalignment. To ensure good alignment, mounting surfaces must be checked for flatness and must lie in the same plane. When tightening base bolts, each bolt should be alternately tightened in incremental torque values until full torque is achieved to prevent the angular shifting of the pillow block that occurs when one bolt is tightened to its full torque. Shimming may be required to minimize misalignment.

Shaft Tolerances		
Normal Shaft Size Inches	**Commercial Shaft Tolerances Inches**	**Recommended Shaft Tolerances D-LOK Lock Ball Bearings Inches**
Up to 1-1/2	+0.000 -0.002	+0.0000 -0.0005
Over 1-1/2 to 2-1/2	+0.000 -0.003	+0.0000 -0.0010
Over 2-1/2 to 4	+0.000 -0.004	+0.0000 -0.0010

Note: Bearing analysis program "BEST" is available on www.ptwizard.com

FEATURES/BENEFITS PAGE B6-3	HOW TO ORDER/NOMENCLATURE PAGE B6-5	SELECTION/DIMENSIONS PAGE B6-10	ACCESSORIES PAGE B6-62

SELECTION



D-LOK Ball Bearings - Inch

Table 2: Easy Selection Table for DL and DLM Bearing Mounted Units (Pounds)

Ring Size	Shaft Size		Dynamic Capacity C (Lbs.)	Static Capacity Co (Lbs.)	L_{10} Life Hours	Allowable Equivalent Radial Load Ratings (Lbs.) at Various RPM*															
	DL	DLM				50	150	250	500	750	1000	1500	1750	2000	2500	3000	3500	4500	5000	5500	7500
204	3/4		2899	1482	20000	740	515	435	345	300	275	240	225	215	200	190	180	165	160	155	140
					30000	645	450	380	300	260	240	210	200	190	175	165	155	145	140	135	120
					40000	590	410	345	275	240	215	190	180	170	160	150	145	130	125	125	110
					60000	515	355	300	240	210	190	165	155	150	140	130	125	115	110	105	95
					100000	435	300	255	200	175	160	140	130	125	115	110	105	190	95	90	80
205	7/8 15/16 1		3146	1769	20000	805	450	470	375	3225	295	260	245	235	220	205	195	180	175	170	150
					30000	705	485	410	325	285	260	225	215	205	190	180	170	155	150	145	130
					40000	640	445	375	295	260	235	205	195	185	175	165	155	140	135	135	120
					60000	560	385	325	260	225	205	180	170	165	150	140	135	125	120	115	105
					100000	470	325	275	220	190	175	150	145	135	125	120	115	105	100	100	90
206	1-1/8 1-3/16 1-1/4	1	4368	2538	20000	1115	775	655	520	455	410	360	340	325	305	285	270	250	240	235	
					30000	975	675	570	455	395	360	315	300	285	265	250	235	220	210	205	
					40000	885	615	520	410	360	325	285	270	260	240	225	215	200	190	185	
					60000	775	535	455	360	315	285	250	235	225	210	200	190	175	165	160	
					100000	655	455	380	305	265	240	210	200	190	175	165	160	145	140	135	
207	1-1/4 1-3/8 1-7/16	1-3/16 1-1/4	5759	3461	20000	1475	1020	860	685	595	545	475	450	430	400	375	355	330	315	305	
					30000	1285	890	755	595	520	475	415	395	375	350	330	310	285	275	270	
					40000	1170	810	685	545	475	430	375	355	340	315	300	285	260	250	245	
					60000	1020	710	595	475	415	375	330	310	300	275	260	250	230	220	125	
					100000	860	595	505	400	350	315	275	265	250	235	220	210	190	185	180	
208	1-1/2	1-7/16 1-1/2**	7332	4475	20000	1875	1300	1095	870	760	690	605	575	550	510	480	455	420	405		
					30000	1640	1135	960	760	665	605	525	500	480	445	420	400	365	355		
					40000	1490	1030	870	690	605	550	480	455	435	405	380	360	330	320		
					60000	1300	900	760	605	525	480	420	400	380	355	330	315	290	280		
					100000	1095	760	640	510	445	405	355	335	320	300	280	265	245	235		
209	1-5/8 1-11/16 1-3/4	1-1/2	7891	4906	20000	2020	1400	1180	935	820	745	650	615	590	550	515	490	450	435		
					30000	1765	1225	1030	820	715	650	570	540	515	480	450	430	395	380		
					40000	1600	1110	935	745	650	590	515	490	470	435	410	390	360	345		
					60000	1400	970	820	650	570	515	450	430	410	380	360	340	310	300		
					100000	1180	820	690	550	480	435	380	360	345	320	300	285	265	255		
210	1-15/16 2	1-11/16 1-3/4	7891	5213	20000	2020	1400	1180	935	820	745	650	615	590	550	515	490	450			
					30000	1765	1225	1030	820	715	650	570	540	515	480	450	430	395			
					40000	1600	1110	935	745	650	590	515	490	470	435	410	390	360			
					60000	1400	970	820	650	570	515	450	430	410	380	360	340	310			
					100000	1180	820	690	550	480	435	380	360	345	320	300	285	265			
211	2 2-3/16	1-15/16 2	9755	6588	20000	2491	1727	1457	1156	1010	918	802	761	729	676	636	604				
					30000	2176	1509	1272	1010	882	802	700	665	636	591	556	528				
					40000	1977	1371	1156	918	802	728	636	604	578	537	505	480				
					60000	1727	1197	1010	802	700	636	556	528	505	469	441	419				
					100000	1457	1010	852	676	591	537	469	445	426	395	372	353				
212	2-1/4 2-7/16	2-3/16 2-1/4	11791	8100	20000	3015	2090	1765	1400	1225	1110	970	925	880	820	770	730				
					30000	2635	1825	1540	1225	1070	970	880	805	770	715	675	640				
					40000	2395	1660	1400	1110	970	880	770	730	700	650	610	580				
					60000	2090	1450	1225	970	850	770	675	640	610	570	535	510				
					100000	1765	1225	1030	820	715	650	570	540	515	480	450	430				
214	2-1/2 2-11/16	2-7/16 2-1/2	13994	9838	20000	3580	2480	2095	1660	1450	1320	1155	1095	1045	970	915					
					30000	3125	2171	1830	1450	1270	1155	1005	955	915	850	800					
					40000	2840	1970	1660	1320	1155	1045	915	870	830	770	725					
					60000	2480	1720	1450	1155	1005	915	800	760	725	675	635					
					100000	2094	1450	1225	970	850	770	675	640	615	570	535					
215	2-15/16	2-11/16	14872	11108	20000	3805	2640	2225	1765	1545	1400	1225	1165	1115	1035	975					
					30000	3325	2305	1945	1545	1350	1225	1070	1015	975	905	850					
					40000	3020	2095	1765	1400	1225	1115	975	925	885	820	770					
					60000	2640	1830	1545	1225	1070	975	850	805	770	715	675					
					100000	2225	1545	1300	1035	905	820	715	680	650	605	570					
216		2-15/16	17407	13102	20000	4450	3085	2605	2065	1805	1640	1435	1360	1300	1210						
					30000	3890	2695	2275	1805	1580	1435	1250	1190	1140	1055						
					40000	3535	2450	2065	1640	1435	1300	1140	1080	1035	960						
					60000	3085	2140	1805	1435	1250	1140	995	945	905	840						
					100000	2605	1805	1525	1210	1055	960	840	795	760	705						
218		3-7/16	21451	16641	20000	5485	3805	3210	2550	2225	2025	1765	1680	1605							
					30000	4795	3325	2805	2225	1945	1765	1545	1465	1405							
					40000	4355	3020	2550	2025	1765	1605	1405	1335	1276							
					60000	3805	2640	2225	1765	1545	1405	1225	1165	1115							
					100000	3210	2225	1880	1490	1300	1185	1035	980	940							

** Piloted flange only

Note: Bearing analysis program "BEST" is available on www.ptwizard.com

FEATURES/BENEFITS PAGE B6-3	HOW TO ORDER/NOMENCLATURE PAGE B6-5	SELECTION/DIMENSIONS PAGE B6-10	ACCESSORIES PAGE B6-62



D-LOK Ball Bearings - Metric

Table 3: Easy Selection Table For DL and DLM Bearing Mounted Units (Newtons)

Ring Size	Shaft Size (mm)		Dynamic Capacity C (N)	Static Capacity Co (N)	L_{10} Life Hours	Allowable Equivalent Radial Load Ratings (N) at Various RPM*															
	DL	DLM				50	150	250	500	750	1000	1500	1750	2000	2500	3000	3500	4500	5000	5500	7500
204	20		12895	6592	20000	3292	2291	1935	1535	1334	1223	1068	1001	956	890	845	801	734	712	689	623
					30000	2869	2002	1690	1334	1156	1068	934	890	845	778	724	689	645	623	600	534
					40000	2624	1824	1535	1223	1068	956	845	801	756	712	667	645	578	556	556	489
					60000	2291	1579	1334	1068	934	845	734	689	667	623	578	556	512	489	467	423
					100000	1935	1334	1134	890	778	712	623	578	556	512	489	467	400	423	400	356
205	25		13993	7869	20000	3581	2491	2091	1668	1446	1312	1156	1090	1045	979	912	867	801	778	756	667
					30000	3136	2157	1827	1446	1268	1156	1001	956	912	845	801	756	689	667	645	578
					40000	2847	1979	1668	1312	1156	1045	912	867	823	778	734	689	623	600	600	534
					60000	2491	1712	1446	1156	1001	912	801	756	734	667	623	600	556	534	512	467
					100000	2091	1446	1223	979	845	778	667	645	600	556	534	512	467	445	445	400
206	30		19429	11290	20000	4960	3447	2913	2313	2024	1824	1601	1512	1446	1357	1268	1201	1112	1068	1045	
					30000	4337	3002	2535	2024	1757	1601	1401	1334	1268	1179	1112	1045	979	934	912	
					40000	3936	2736	2313	1824	1601	1446	1268	1201	1156	1068	1001	958	890	845	823	
					60000	3447	2380	2024	1601	1401	1268	1112	1045	1001	934	890	845	778	734	712	
					100000	2913	2024	1690	1357	1179	1068	934	890	845	778	734	712	645	623	600	
207	35		25616	15395	20000	6561	4537	3825	3047	2647	2424	2113	2002	1913	1779	1668	1579	1468	1401	1357	
					30000	5716	3959	3358	2674	2313	2113	1846	1757	1668	1557	1468	1379	1268	1223	1201	
					40000	5204	3603	3047	2424	2113	1913	1668	1579	1512	1401	1334	1268	1156	1112	1090	
					60000	4537	3158	2647	2113	1846	1669	1468	1379	1334	1223	1156	1112	1023	979	956	
					100000	3825	2647	2246	1779	1557	1401	1223	1179	1112	1045	979	934	845	823	801	
208	40	35	32613	19906	20000	8341	5782	4871	3870	3380	3069	2691	2558	2446	2268	2135	2024	1868	1801		
					30000	7295	5048	4270	3380	2958	2691	2335	2224	2135	1979	1868	1779	1624	1579		
					40000	6628	4581	3870	3069	2691	2446	2135	2024	1935	1801	1690	1601	1468	1423		
					60000	5782	4003	3380	2691	2335	2135	1868	1779	1690	1576	1468	1401	1290	1245		
					100000	4871	3380	2847	2268	1979	1801	1579	1490	1423	1334	1245	1179	1090	1045		
209	45		35099	21823	20000	8985	6227	5249	4159	3647	3314	2891	2736	2624	2446	2291	2180	2002	1935		
					30000	7851	5449	4581	3649	3180	2891	2535	2402	2291	2135	2002	1913	1757	1690		
					40000	7117	4937	4159	3314	2891	2624	2291	2180	2091	1935	1824	1735	1601	1535		
					60000	6227	4315	3647	2891	2535	2291	2002	1913	1824	1690	1601	1512	1379	1334		
					100000	5249	3647	3069	2446	2135	1935	1690	1601	1535	1423	1334	1268	1179	1134		
210	50		35099	23189	20000	8985	6227	5249	4159	3647	3314	2891	2736	2624	2446	2291	2180	2002			
					30000	7851	5449	4581	3647	3180	2891	2535	2402	2291	2135	2002	1913	1757			
					40000	7117	4937	4159	3314	2891	2624	2291	2180	2091	1935	1824	1735	1601			
					60000	6227	4315	3647	2891	2535	2291	2002	1913	1824	1690	1601	1512	1379			
					100000	5249	3647	3069	2446	2135	1935	1690	1601	1535	1423	1334	1268	1179			
211	55	50	43394	29305	20000	11079	7682	6479	5142	4492	4082	3566	3387	3241	3007	2830	2688				
					30000	9678	6711	5660	4492	3924	3566	3115	2959	2831	2627	2472	2348				
					40000	8793	6097	5142	4082	3566	3240	2830	2688	2572	2387	2246	2134				
					60000	7682	5326	4492	3566	3115	2830	2472	2348	2247	2085	1962	1864				
					100000	6479	4492	3789	3007	2627	2387	2085	1981	1895	1759	1655	1572				
212	60		52446	36031	20000	13411	9296	7851	6227	5449	4937	4315	4114	3914	3647	3425	3247				
					30000	11720	8118	6850	5449	4759	4315	3914	3581	3425	3180	3002	2847				
					40000	10653	7384	6227	4937	4315	3914	3425	3247	3114	2891	2713	2580				
					60000	9296	6450	5449	4315	3781	3425	3002	2847	2713	2535	2380	2268				
					100000	7851	5449	4581	3647	3180	2891	2535	2402	2291	2135	2002	1913				
214	70	65	62245	43762	20000	15925	11031	9319	7384	6450	5871	5137	4871	4648	4315	4070					
					30000	13900	96721	8140	6450	5649	5137	4470	4248	4070	3781	3558					
					40000	12632	8763	7384	5871	5137	4648	4070	3870	3692	3425	3225					
					60000	11031	7651	6450	5137	4470	4070	3558	3380	3225	3002	2824					
					100000	9318	6450	5449	4315	3781	3425	3002	2847	2736	2535	2380					

** Piloted flange only

Note: Bearing analysis program “BEST” is available on www.ptwizard.com

FEATURES/BENEFITS PAGE B6-3	HOW TO ORDER/NOMENCLATURE PAGE B6-5	SELECTION/DIMENSIONS PAGE B6-10	ACCESSORIES PAGE B6-62

SELECTION/DIMENSIONS

D-LOK Ball Bearings
DL NORMAL DUTY PILLOW BLOCKS

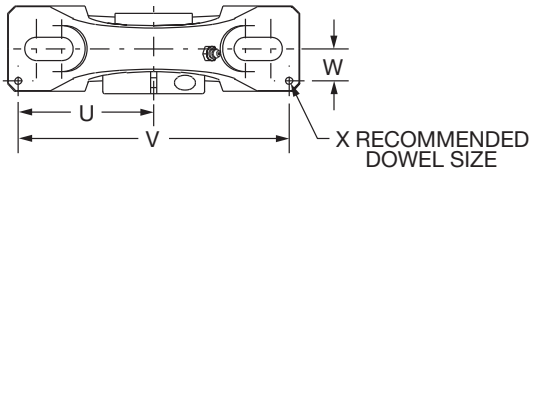

Series	Shaft Size	Part No.	Description
204	3/4	**128700**	P2B-DL-012
	20mm	***126601***	*P2B-DL-20M*
205	7/8	**128701**	P2B-DL-014
	15/16	**128702**	P2B-DL-015
	1	**128703**	P2B-DL-100
	25mm	***126602***	*P2B-DL-25M*
206 (DLU)	1-1/8	**128704**	P2B-DLU-102
	1-3/16	**128705**	P2B-DLU-103
	1-1/4	**128706**	P2B-DLU-104S
	30mm	***126603***	*P2B-DLU-30M*
207	1-1/4	**128707**	P2B-DL-104
	1-3/8	**128708**	P2B-DL-106
	1-7/16	**128709**	P2B-DL-107
	35mm	***126604***	*P2B-DL-35M*
208 (DLB)	1-1/2	**128710**	P2B-DLB-108
	40mm	***126605***	*P2B-DLB-40M*
209	1-5/8	**128711**	P2B-DL-110L
	1-11/16	**128712**	P2B-DL-111
	1-3/4	**128713**	P2B-DL-112
	45mm	***126606***	*P2B-DL-45M*
210	1-15/16	**128714**	P2B-DL-115
	2	**128715**	P2B-DL-200
	50mm	***126607***	*P2B-DL-50M*
211	2	**128830**	P2B-DLM-200
	2-3/16	**128717**	P2B-DL-203
	55mm	***126608***	*P2B-DL-55M*
212	2-1/4	**128832**	P2B-DLM-204
	2-7/16	**128719**	P2B-DL-207
	60mm	***126609***	*P2B-DL-60M*
214	2-1/2	**128834**	P2B-DLM-208
	2-11/16	**128720**	P2B-DL-211
	70mm	***126610***	*P2B-DL-70M*
215	2-15/16	**056610**	P2B-DL-215



D-LOK Ball Bearings
DL NORMAL DUTY PILLOW BLOCKS

Series	Shaft Size	Weight lbs / *kg*	A	B	C	D		F Bolt Dia.	G	H	J	L	M	R	S	U	V	W	X
						min.	max.												
204	3/4	2.1	1.28	5.25	1.34	3.38	4.19	3/8	0.85	0.53	2.56	1.71	1.31	0.50	0.78	2.25	4.50	0.50	0.12
	20mm	*1.0*	*32.5*	*133.4*	*34.0*	*85.9*	*106.4*	*M10*	*21.6*	*13.5*	*65.0*	*43.4*	*33.3*	*12.7*	*19.8*	*57.2*	*114.3*	*12.7*	*3.0*
205	7/8	2.3	1.44	5.50	1.40	3.69	4.50	3/8	0.85	0.58	2.77	1.99	1.44	0.56	0.88	2.50	5.00	0.50	0.12
	15/16	2.3																	
	1	2.3																	
	25mm	*1.1*	*36.6*	*139.7*	*35.6*	*93.7*	*114.3*	*M10*	*21.6*	*14.7*	*70.4*	*50.5*	*36.5*	*14.2*	*22.4*	*63.5*	*127.0*	*12.7*	*3.0*
206 (DLU)	1-1/8	3.8	1.56	6.25	1.75	4.25	5.00	1/2	0.94	0.75	3.31	2.22	1.69	0.58	0.98	2.88	5.76	0.56	0.12
	1-3/16	3.7																	
	1-1/4	3.7																	
	30mm	*1.7*	*39.6*	*158.8*	*44.5*	*108.0*	*127.0*	*M12*	*23.9*	*19.1*	*84.1*	*56.4*	*42.9*	*14.7*	*24.9*	*73.2*	*146.3*	*14.2*	*3.0*
207	1-1/4	4.9	1.75	6.50	1.75	4.68	5.44	1/2	0.94	0.71	3.75	2.69	1.88	0.67	1.08	2.91	5.82	0.56	0.12
	1-3/8	4.9																	
	1-7/16	4.8																	
	35mm	*2.2*	*44.45*	*165.10*	*44.45*	*118.87*	*138.18*	*M12*	*23.88*	*18.03*	*95.25*	*68.33*	*47.6*	*17.02*	*27.43*	*73.91*	*147.83*	*14.22*	*3.05*
208 *(DLB)*	1-1/2	6.0	2.01	7.25	1.93	5.18	5.88	1/2	0.91	0.75	4.00	2.74	1.94	0.75	1.26	3.26	6.52	0.69	0.12
	40mm	*2.7*	*51.1*	*184.2*	*49.0*	*131.6*	*149.4*	*M12*	*23.1*	*19.1*	*101.6*	*69.6*	*49.3*	*19.1*	*32.0*	*82.8*	*165.6*	*17.5*	*3.0*
209	1-5/8	6.8	2.01	7.44	2.00	5.50	6.19	1/2	0.90	0.75	4.28	2.99	2.13	0.75	1.26	3.38	6.76	0.69	0.12
	1-11/16	6.8																	
	1-3/4	6.7																	
	45mm	*3.1*	*51.1*	*189.0*	*50.8*	*139.7*	*157.2*	*M12*	*22.9*	*19.1*	*108.7*	*75.9*	*54.0*	*19.1*	*32.0*	*85.9*	*171.7*	*17.5*	*3.0*
210	1-15/16	8.5	2.01	8.12	2.25	6.00	6.68	5/8	1.02	0.75	4.53	3.24	2.25	0.75	1.26	3.69	7.38	0.81	0.12
	2	8.4																	
	50mm	*3.9*	*51.1*	*206.2*	*57.2*	*152.4*	*169.7*	*M16*	*25.9*	*19.1*	*115.1*	*82.3*	*57.2*	*19.1*	*32.0*	*93.7*	*187.5*	*20.6*	*3.0*
211	2	12.2	2.25	8.88	2.30	6.38	7.44	5/8	1.21	0.88	4.96	3.69	2.50	0.88	1.37	3.94	7.88	0.81	0.12
	2-3/16	10.3																	
	55mm	*5.6*	*57.2*	*225.6*	*58.4*	*162.1*	*189.0*	*M16*	*30.7*	*22.4*	*126.0*	*93.7*	*63.5*	*22.4*	*34.8*	*100.1*	*200.2*	*20.6*	*3.0*
212	2-1/4	17.5	2.38	9.50	2.37	6.88	7.94	5/8	1.21	0.88	5.40	4.11	2.75	0.90	1.48	4.25	8.50	0.88	0.12
	2-7/16	14.8																	
	60mm	*7.0*	*60.5*	*241.3*	*60.2*	*174.8*	*201.7*	*M16*	*30.7*	*22.4*	*137.2*	*104.4*	*69.9*	*22.9*	*37.6*	*108.0*	*215.9*	*22.4*	*3.0*
214	2-1/2	19.4	2.60	10.75	2.69	7.50	8.50	3/4	1.32	0.94	6.09	4.38	3.00	1.06	1.54	4.88	9.76	0.94	0.12
	2-11/16	19.3																	
	70mm	*8.9*	*66.0*	*273.1*	*68.3*	*190.5*	*215.9*	*M18*	*33.5*	*23.9*	*154.7*	*111.3*	*76.2*	*26.9*	*39.1*	*124.0*	*247.9*	*23.9*	*3.0*
215	2-15/16	24.9	*2.40*	*11.75*	*2.88*	*8.50*	*9.50*	*7/8*	*1.44*	*1.00*	*6.75*	*4.69*	*3.50*	*0.82*	*1.58*	*5.48*	*10.96*	*1.04*	*0.12*
			61.0	*298.5*	*73.2*	*215.9*	*241.3*	*M22*	*36.6*	*25.4*	*171.5*	*119.1*	*88.9*	*20.8*	*40.1*	*139.2*	*278.4*	*26.4*	*3.0*

SELECTION/DIMENSIONS

D-LOK Ball Bearings
DLAH NORMAL DUTY AIR HANDLING PILLOW BLOCKS

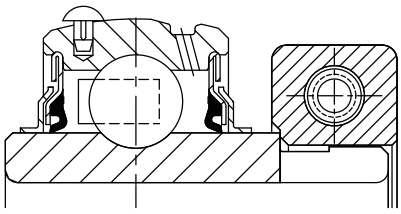

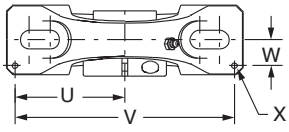

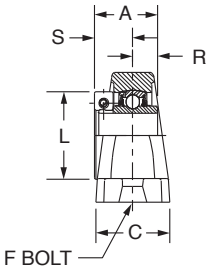

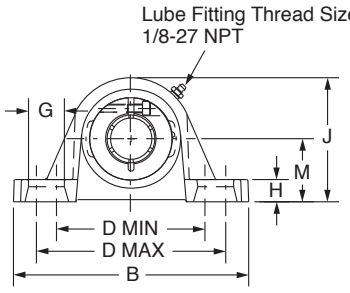

Series	Shaft Size	Part No.	Description
204	3/4	**128432**	P2B-DLAH-012
	20mm	***075045***	*P2B-DLAH-20M*
205	7/8	**@**	P2B-DLAH-014
	15/16	**@**	P2B-DLAH-015
	1	**128435**	P2B-DLAH-100
	25mm	***073924***	*P2B-DLAH-25M*
206 (DLU)	1-1/8	**128436**	P2B-DLUAH-102
	1-3/16	**128437**	P2B-DLUAH-103
	1-1/4	**128438**	P2B-DLUAH-104S
	30mm	***@***	*P2B-DLUAH-30M*
207	1-1/4	**065784**	P2B-DLAH-104
	1-3/8	**128440**	P2B-DLAH-106
	1-7/16	**128441**	P2B-DLAH-107
	35mm	***068777***	*P2B-DLAH-35M*
208 (DLB)	1-1/2	**074593**	P2B-DLBAH-108
	40mm	***@***	*P2B-DLBAH-40M*
209	1-5/8	**128443**	P2B-DLAH-110L
	1-11/16	**128444**	P2B-DLAH-111
	1-3/4	**@**	P2B-DLAH-112
	45mm	***068537***	*P2B-DLAH-45M*
210	1-15/16	**128446**	P2B-DLAH-115
	2	**064825**	P2B-DLAH-200
	50mm	***067783***	*P2B-DLAH-50M*
211	2	**128481**	P2B-DLMAH-200
	2-3/16	**128449**	P2B-DLAH-203
	55mm	***@***	*P2B-DLAH-55M*
212	2-1/4	**128483**	P2B-DLMAH-204
	2-7/16	**128451**	P2B-DLAH-207
	60mm	***073926***	*P2B-DLAH-60M*
214	2-1/2	**128485**	P2B-DLMAH-208
	2-11/16	**128452**	P2B-DLAH-211
	70mm	***@***	*P2B-DLAH-70M*
215	2-15/16	**062187**	P2B-DLAH-215

@ Assembled to order



D-LOK Ball Bearings
DLAH NORMAL DUTY AIR HANDLING PILLOW BLOCKS

Series	Shaft Size	Weight lbs / *kg*	A	B	C	D min.	D max.	F Bolt Dia.	G	H	J	L	M	R	S	U	V	W	X
204	3/4	2.1	1.28	5.25	1.34	3.38	4.19	3/8	0.85	0.53	2.56	1.71	1.31	0.50	0.78	2.25	4.50	0.50	0.12
	20mm	*1.0*	*32.5*	*133.4*	*34.0*	*85.9*	*106.4*	*M10*	*21.6*	*13.5*	*65.0*	*43.4*	*33.3*	*12.7*	*19.8*	*57.2*	*114.3*	*12.7*	*3.0*
205	7/8	2.3	1.44	5.50	1.40	3.69	4.50	3/8	0.85	0.58	2.77	1.99	1.44	0.56	0.88	2.50	5.00	0.50	0.12
	15/16	2.3																	
	1	2.3																	
	25mm	*1.1*	*36.6*	*139.7*	*35.6*	*93.7*	*114.3*	*M10*	*21.6*	*14.7*	*70.4*	*50.5*	*36.5*	*14.2*	*22.4*	*63.5*	*127.0*	*12.7*	*3.0*
206 (DLU)	1-1/8	3.8	1.56	6.25	1.75	4.25	5.00	1/2	0.94	0.75	3.31	2.22	1.69	0.58	0.98	2.88	5.76	0.56	0.12
	1-3/16	3.7																	
	1-1/4	3.7																	
	30mm	*1.7*	*39.6*	*158.8*	*44.5*	*108.0*	*127.0*	*M12*	*23.9*	*19.1*	*84.1*	*56.4*	*42.9*	*14.7*	*24.9*	*73.2*	*146.3*	*14.2*	*3.0*
207	1-1/4	4.9	1.75	6.50	1.75	4.68	5.44	1/2	0.94	0.71	3.75	2.69	1.88	0.67	1.08	2.91	5.82	0.56	0.12
	1-3/8	4.9																	
	1-7/16	4.8																	
	35mm	*2.2*	*44.5*	*165.1*	*44.5*	*118.9*	*138.2*	*M12*	*23.9*	*18.0*	*95.3*	*68.3*	*47.6*	*17.0*	*27.4*	*73.9*	*147.8*	*14.2*	*3.0*
208 (DLB)	1-1/2	6.0	2.01	7.25	1.93	5.18	5.88	1/2	0.91	0.75	4.00	2.74	1.94	0.75	1.26	3.26	6.52	0.69	0.12
	40mm	*2.7*	*51.1*	*184.2*	*49.0*	*131.6*	*149.4*	*M12*	*23.1*	*19.1*	*101.6*	*69.6*	*49.3*	*19.1*	*32.0*	*82.8*	*165.6*	*17.5*	*3.0*
209	1-5/8	6.8	2.01	7.44	2.00	5.50	6.19	1/2	0.90	0.75	4.28	2.99	2.13	0.75	1.26	3.38	6.76	0.69	0.12
	1-11/16	6.8																	
	1-3/4	6.7																	
	45mm	*3.1*	*51.1*	*189.0*	*50.8*	*139.7*	*157.2*	*M12*	*22.9*	*19.1*	*108.7*	*75.9*	*54.0*	*19.1*	*32.0*	*85.9*	*171.7*	*17.5*	*3.0*
210	1-15/16	8.5	2.01	8.12	2.25	6.00	6.68	5/8	1.02	0.75	4.53	3.24	2.25	0.75	1.26	3.69	7.38	0.81	0.12
	2	8.4																	
	50mm	*3.9*	*51.1*	*206.2*	*57.2*	*152.4*	*169.7*	*M16*	*25.9*	*19.1*	*115.1*	*82.3*	*57.2*	*19.1*	*32.0*	*93.7*	*187.5*	*20.6*	*3.0*
211	2	12.2	2.25	8.88	2.30	6.38	7.44	5/8	1.21	0.88	4.96	3.69	2.50	0.88	1.37	3.94	7.88	0.81	0.12
	2-3/16	10.3																	
	55mm	*5.6*	*57.2*	*225.6*	*58.4*	*162.1*	*189.0*	*M16*	*30.7*	*22.4*	*126.0*	*93.7*	*63.5*	*22.4*	*34.8*	*100.1*	*200.2*	*20.6*	*3.0*
212	2-1/4	17.5	2.38	9.50	2.37	6.88	7.94	5/8	1.21	0.88	5.40	4.11	2.75	0.90	1.48	4.25	8.50	0.88	0.12
	2-7/16	14.8																	
	60mm	*7.0*	*60.5*	*241.3*	*60.2*	*174.8*	*201.7*	*M16*	*30.7*	*22.4*	*137.2*	*104.4*	*69.9*	*22.9*	*37.6*	*108.0*	*215.9*	*22.4*	*3.0*
214	2-1/2	19.4	2.60	10.75	2.69	7.50	8.50	3/4	1.32	0.94	6.09	4.38	3.00	1.06	1.54	4.88	9.76	0.94	0.12
	2-11/16	19.3																	
	70mm	*8.9*	*66.0*	*273.1*	*68.3*	*190.5*	*215.9*	*M18*	*33.5*	*23.9*	*154.7*	*111.3*	*76.2*	*26.9*	*39.1*	*124.0*	*247.9*	*23.9*	*3.0*
215	2-15/16	24.9	*2.40*	*11.75*	*2.88*	*8.50*	*9.50*	*7/8*	*1.44*	*1.00*	*6.75*	*4.69*	*3.50*	*0.82*	*1.58*	*5.48*	*10.96*	*1.04*	*0.12*
			61.0	*298.5*	*73.2*	*215.9*	*241.3*	*M22*	*36.6*	*25.4*	*171.5*	*119.1*	*88.9*	*20.8*	*40.1*	*139.2*	*278.4*	*26.4*	*3.0*

SELECTION/DIMENSIONS

D-LOK Ball Bearings
DLB NORMAL DUTY PILLOW BLOCKS

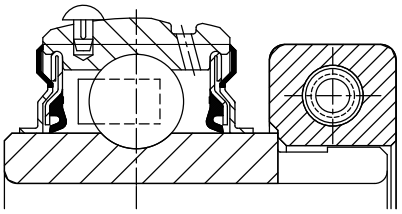

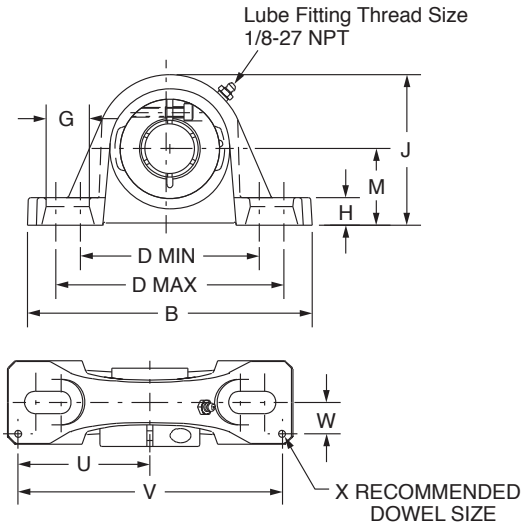

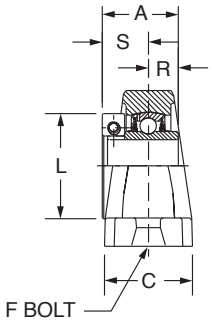

Series	Shaft Size	Part No.	Description
204	3/4	**128721**	P2B-DLB-012
	20mm	***@***	*P2B-DLB-20M*
205	7/8	**128722**	P2B-DLB-014
	15/16	**128723**	P2B-DLB-015
	1	**128724**	P2B-DLB-100
	25mm	***062143***	*P2B-DLB-25M*
206	1-1/8	**128725**	P2B-DLB-102
	1-3/16	**128726**	P2B-DLB-103
	1-1/4	**128727**	P2B-DLB-104S
	30mm	***@***	*P2B-DLB-30M*
207	1-1/4	**128728**	P2B-DLB-104
	1-3/8	**128729**	P2B-DLB-106
	1-7/16	**128730**	P2B-DLB-107
	35mm	***@***	*P2B-DLB-35M*
208	1-1/2	**128710**	P2B-DLB-108
	40mm	***126605***	*P2B-DLB-40M*
209	1-5/8	**128731**	P2B-DLB-110L
	1-11/16	**128732**	P2B-DLB-111
	1-3/4	**128733**	P2B-DLB-112
	45mm	***@***	*P2B-DLB-45M*
210	1-15/16	**128734**	P2B-DLB-115
	2	**128735**	P2B-DLB-200
	50mm	***@***	*P2B-DLB-50M*
211	2	**128736**	P2B-DLB-200L
	2-3/16	**128738**	P2B-DLB-203
	55mm	***@***	*P2B-DLB-55M*
212	2-1/4	**128739**	P2B-DLB-204L
	2-7/16	**128741**	P2B-DLB-207
	60mm	***@***	*P2B-DLB-60M*

@ Assemble to order



D-LOK Ball Bearings
DLB NORMAL DUTY PILLOW BLOCKS

Series	Shaft Size	Weight lbs / kg	A	B	C	D		F Bolt Dia.	G	H	J	L	M	R	S	U	V	W	X
						min.	max.												
204	3/4	2.1	1.28	5.25	1.34	3.38	4.19	3/8	0.85	0.47	2.49	1.71	1.25	0.50	0.78	2.25	4.50	0.50	0.12
	20mm	*1.0*	*32.5*	*133.4*	*34.0*	*85.9*	*106.4*	*M10*	*21.6*	*11.9*	*63.2*	*43.4*	*31.8*	*12.7*	*19.8*	*57.2*	*114.3*	*12.7*	*3.0*
205	7/8	2.3	1.44	5.50	1.40	3.69	4.50	3/8	0.85	0.45	2.64	1.99	1.31	0.56	0.88	2.50	5.00	0.50	0.12
	15/16	2.3																	
	1	2.3																	
	25mm	*1.1*	*36.6*	*139.7*	*35.6*	*93.7*	*114.3*	*M10*	*21.6*	*11.4*	*67.1*	*50.5*	*33.3*	*14.2*	*22.4*	*63.5*	*127.0*	*12.7*	*3.0*
206	1-1/8	3.8	1.56	6.25	1.75	4.25	5.00	1/2	0.94	0.62	3.19	2.22	1.56	0.58	0.98	2.88	5.76	0.56	0.12
	1-3/16	3.7																	
	1-1/4	3.7																	
	30mm	*1.7*	*39.6*	*158.8*	*44.5*	*108.0*	*127.0*	*M12*	*23.9*	*15.8*	*81.0*	*56.4*	*39.6*	*14.7*	*24.9*	*73.2*	*146.3*	*14.2*	*3.0*
207	1-1/4	4.9	1.75	6.50	1.75	4.68	5.44	1/2	0.94	0.65	3.69	2.69	1.81	0.67	1.08	2.91	5.82	0.56	0.12
	1-3/8	4.9																	
	1-7/16	4.8																	
	35mm	*2.2*	*44.5*	*165.1*	*44.5*	*118.9*	*138.2*	*M12*	*23.9*	*16.5*	*93.7*	*68.3*	*46.0*	*17.0*	*27.4*	*73.9*	*147.8*	*14.2*	*3.0*
208	1-1/2	6.0	2.01	7.25	1.93	5.18	5.88	1/2	0.91	0.75	4.00	2.74	1.94	0.75	1.26	3.26	6.52	0.69	0.12
	40mm	*2.7*	*51.1*	*184.2*	*49.0*	*131.6*	*149.4*	*M12*	*23.1*	*19.1*	*101.6*	*69.6*	*49.3*	*19.1*	*32.0*	*82.8*	*165.6*	*17.5*	*3.0*
209	1-5/8	6.8	2.01	7.44	2.00	5.50	6.19	1/2	0.90	0.69	4.21	2.99	2.06	0.75	1.26	3.38	6.76	0.69	0.12
	1-11/16	6.8																	
	1-3/4	6.7																	
	45mm	*3.1*	*51.1*	*189.0*	*50.8*	*139.7*	*157.2*	*M12*	*22.9*	*17.5*	*106.9*	*75.9*	*52.3*	*19.1*	*32.0*	*85.9*	*171.7*	*17.5*	*3.0*
210	1-15/16	8.5	2.01	8.12	2.25	6.00	6.68	5/8	1.02	0.68	4.47	3.24	2.19	0.75	1.26	3.69	7.38	0.81	0.12
	2	8.4																	
	50mm	*3.9*	*51.1*	*206.2*	*57.2*	*152.4*	*169.7*	*M16*	*25.9*	*17.3*	*113.5*	*82.3*	*55.6*	*19.1*	*32.0*	*93.7*	*187.5*	*20.6*	*3.0*
211	2	12.2	2.25	8.88	2.30	6.38	7.44	5/8	1.21	0.81	4.90	3.69	2.44	0.88	1.37	3.94	7.88	0.81	0.12
	2-3/16	10.3																	
	55mm	*5.6*	*57.2*	*225.6*	*58.4*	*162.1*	*189.0*	*M16*	*30.7*	*20.6*	*124.5*	*93.7*	*62.0*	*22.4*	*34.8*	*100.1*	*200.2*	*20.6*	*3.0*
212	2-1/4	17.5	2.38	9.50	2.37	6.88	7.94	5/8	1.21	0.81	5.34	4.11	2.69	0.90	1.48	4.25	8.50	0.88	0.12
	2-7/16	14.8																	
	60mm	*7.0*	*60.5*	*241.3*	*60.2*	*174.8*	*201.7*	*M16*	*30.7*	*20.6*	*135.6*	*104.4*	*68.3*	*22.9*	*37.6*	*108.0*	*215.9*	*22.4*	*3.0*

FEATURES/BENEFITS PAGE B6-3 | HOW TO ORDER/NOMENCLATURE PAGE B6-5 | SELECTION/DIMENSIONS PAGE B6-10 | ACCESSORIES PAGE B6-62

SELECTION/DIMENSIONS

D-LOK Ball Bearings

DLH-E EXPANSION AND DLH NON-EXPANSION NORMAL DUTY PILLOW BLOCKS

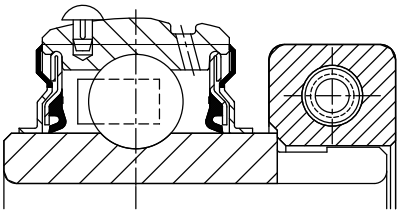

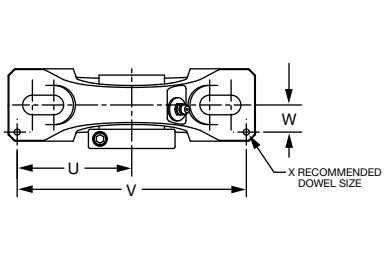

EXPANSION

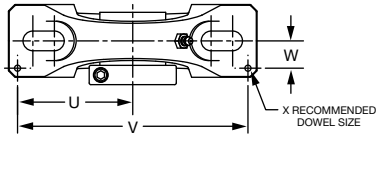

NON-EXPANSION

Series	Shaft Size	Expansion		Non-Expansion	
		Part No.	Description	Part No.	Description
205	1	**076714**	P2B-DLH-100-E	**@**	P2B-DLM-100
	25mm	***075048***	*P2B-DLH-25M-E*	- - - -	- - - - - - - -
206	1-1/8	**@**	P2B-DLH-102-E	**- - - -**	- - - - - - - -
	1-3/16	**126450**	P2B-DLH-103-E	**128824**	P2B-DLM-103
	1-1/4	**@**	P2B-DLH-104S-E	**128707**	P2B-DL-104
	30mm	***075049***	*P2B-DLH-30M-E*	- - - -	- - - - - - - -
207	1-1/4	**@**	P2B-DLH-104-E	**- - - -**	- - - - - - - -
	1-3/8	**066214**	P2B-DLH-106-E	**- - - -**	- - - - - - - -
	1-7/16	**126451**	P2B-DLH-107-E	**128825**	P2B-DLM-107
	35mm	***054455***	*P2B-DLH-35M-E*	***126639***	*P2B-DLM-35M*
209	1-5/8	**@**	P2B-DLH-110L-E	**- - - -**	- - - - - - - -
	1-11/16	**059882**	P2B-DLH-111-E	**068373**	P2B-DLM-111
	1-3/4	**@**	P2B-DLH-112-E	**- - - -**	P2B-DLM-112
	45mm	***075051***	*P2B-DLH-45M-E*	- - - -	- - - - - - - -
210	1-15/16	**126452**	P2B-DLH-115-E	**128829**	P2B-DLM-115
	2	**056676**	P2B-DLH-200-E	**128830**	P2B-DLM-200
	50mm	***068061***	*P2B-DLH-50M-E*	***058997***	*P2B-DLM-50M*
211	2-3/16	**126453**	P2B-DLH-203-E	**128831**	P2B-DLM-203
	55mm	***075052***	*P2B-DLH-55M-E*	- - - -	- - - - - - - -
212	2-7/16	**126454**	P2B-DLH-207-E	**128833**	P2B-DLM-207
	60mm	***@***	*P2B-DLH-60M-E*	- - - -	- - - - - - - -

@ Assembled to order



D-LOK Ball Bearings
DLH-E EXPANSION AND DLH NON-EXPANSION NORMAL DUTY PILLOW BLOCKS

Series	Shaft Size	Weight lbs *kg*	A	B	C	D		F Bolt Dia.	G	H	J	L	M	R	S	T Total Expansion	U	V	W	X
						min.	max.													
205	1	3.5	1.44	6.25	1.75	4.25	5.00	1/2	0.94	0.75	3.31	1.99	1.69	0.56	0.88	0.16	2.88	5.76	0.56	0.12
	25mm	*1.6*	*36.6*	*158.8*	*44.5*	*108.0*	*127.0*	*M12*	*23.9*	*19.1*	*84.1*	*50.5*	*42.9*	*14.2*	*22.4*	*4.1*	*73.2*	*146.3*	*14.2*	*3.0*
206	1-1/8	5.0	1.56	6.50	1.75	4.68	5.44	1/2	0.94	0.71	3.75	2.22	1.88	0.58	0.98	0.16	2.91	5.82	0.56	0.12
	1-3/16	5.0																		
	1-1/4	5.0																		
	30mm	*1.5*	*39.6*	*165.1*	*44.5*	*118.9*	*138.2*	*M12*	*23.9*	*18.0*	*95.3*	*56.4*	*47.8*	*14.7*	*24.9*	*4.1*	*73.9*	*147.8*	*14.2*	*3.0*
207	1-1/4		1.75	7.25	1.93	5.18	5.88	1/2	0.91	0.93	4.19	2.69	2.13	0.67	1.08	0.16	3.26	6.52	0.69	0.12
	1-3/8	6.9																		
	1-7/16	*6.9*																		
	35mm	*2.1*	*44.5*	*184.2*	*49.0*	*131.6*	*149.4*	*M12*	*23.1*	*23.6*	*106.4*	*68.3*	*54.1*	*17.0*	*27.4*	*4.1*	*82.8*	*165.6*	*17.5*	*3.0*
209	1-5/8	9.2	2.01	8.12	2.25	6.00	6.68	5/8	1.02	0.75	4.53	2.99	2.25	0.75	1.26	0.25	3.69	7.38	0.81	0.12
	1-11/16	9.2																		
	1-3/4	*9.2*																		
	45mm	*2.8*	*51.1*	*206.2*	*57.2*	*152.4*	*169.7*	*M16*	*25.9*	*19.1*	*115.1*	*75.9*	*57.2*	*19.1*	*32.0*	*6.4*	*93.7*	*187.5*	*20.6*	*3.0*
210	1-15/16	10.8	2.01	8.88	2.30	6.38	7.44	5/8	1.21	0.88	4.96	3.24	2.50	0.75	1.26	0.22	3.94	7.88	0.81	0.12
	2	*10.8*																		
	50mm	*3.3*	*51.1*	*225.6*	*58.4*	*162.1*	*189.0*	*M16*	*30.7*	*22.4*	*126.0*	*82.3*	*63.5*	*19.1*	*32.0*	*5.6*	*100.1*	*200.2*	*20.6*	*3.0*
211	2-3/16	*15.7*	*2.25*	*9.50*	*2.37*	*6.88*	*7.94*	*5/8*	*1.21*	*0.88*	*5.40*	*3.69*	*2.75*	*0.88*	*1.37*	*0.22*	*4.25*	*8.50*	*0.88*	*0.12*
	55mm	4.8	*57.2*	*241.3*	*60.2*	*174.8*	*201.7*	*M16*	*30.7*	*22.4*	*137.2*	*93.7*	*69.9*	*22.4*	*34.8*	*5.6*	*108.0*	*215.9*	*22.4*	*3.0*
212	2-7/16	*20.1*	*2.38*	*10.75*	*2.69*	*7.50*	*8.50*	*3/4*	*1.32*	*0.94*	*6.09*	*4.11*	*3.00*	*0.90*	*1.48*	*0.22*	*4.88*	*9.76*	*0.94*	*0.12*
	60mm	*6.1*	*60.5*	*273.1*	*68.3*	*190.5*	*215.9*	*M18*	*33.5*	*23.8*	*154.7*	*104.4*	*76.2*	*22.9*	*37.6*	*5.6*	*124.0*	*247.9*	*23.9*	*3.0*

FEATURES/BENEFITS PAGE B6-3	HOW TO ORDER/NOMENCLATURE PAGE B6-5	SELECTION/DIMENSIONS PAGE B6-10	ACCESSORIES PAGE B6-62

SELECTION/DIMENSIONS

D-LOK Ball Bearings
DLM MEDIUM DUTY PILLOW BLOCKS

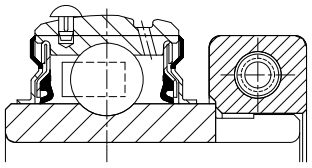

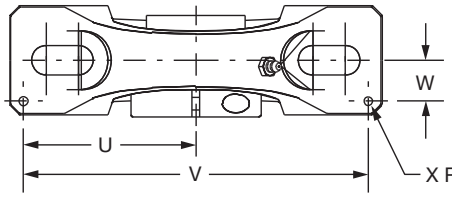

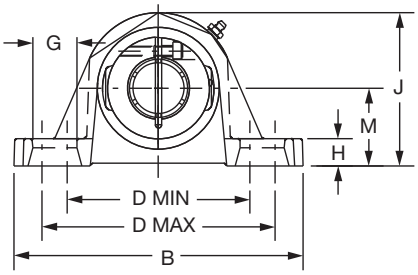

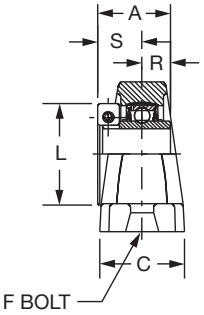

Series	Shaft Size	Part No.	Description
206 (DLMU)	1	**128823**	P2B-DLMU-100
207	1-3/16	**128824**	P2B-DLM-103
	1-1/4	**128707**	P2B-DL-104
208	1-7/16	**128825**	P2B-DLM-107
	35mm	***126639***	*P2B-DLM-35M*
209	1-1/2	**128826**	P2B-DLM-108
	1-5/8	**128711**	P2B-DL-110L
210	1-11/16	**128827**	P2B-DLM-111
	1-3/4	**128828**	P2B-DLM-112
210 (DLMB)	1-11/16	**068373**	P2B-DLMB-111
211	1-15/16	**128829**	P2B-DLM-115
	2	**128830**	P2B-DLM-200
	50mm	***058997***	*P2B-DLM-50M*
212	2-3/16	**128831**	P2B-DLM-203
	2-1/4	**128832**	P2B-DLM-204
214	2-7/16	**128833**	P2B-DLM-207
	2-1/2	**128834**	P2B-DLM-208
	65mm	***126640***	*P2B-DLM-65M*
215	2-11/16	**128696**	P2B-DLM-211
216	2-15/16	**128697**	P2B-DLM-215
218	3-7/16	**128698**	P2B-DLM-307

DODGE®



D-LOK Ball Bearings
DLM MEDIUM DUTY PILLOW BLOCKS

Series	Shaft Size	Weight lbs *kg*	A	B	C	D		F Bolt Dia.	G	H	J	L	M	R	S	U	V	W	X
						min.	max.												
206	1	4.2	1.56	6.25	1.75	4.25	5.00	1/2	0.94	0.75	3.31	2.22	1.69	0.58	0.98	2.88	5.76	0.56	0.12
			39.6	158.8	44.5	108.0	127.0	M12	23.9	19.1	84.1	56.4	42.9	14.7	24.9	73.2	146.3	14.2	3.0
207	1-3/16	5.6	1.75	6.50	1.75	4.68	5.44	1/2	0.94	0.71	3.75	2.69	1.88	0.67	1.08	2.91	5.82	0.56	0.12
	1-1/4	4.9	44.5	165.1	44.5	118.9	138.2	M12	23.9	18.0	95.3	68.3	47.6	17.0	27.4	73.9	147.8	14.2	3.0
208	1-7/16	7.2	2.01	7.25	1.93	5.18	5.88	1/2	0.91	0.93	4.19	2.74	2.13	0.75	1.26	3.26	6.52	0.69	0.12
	35mm	*3.2*	*51.1*	*184.2*	*49.0*	*131.6*	*149.4*	*M12*	*23.1*	*23.6*	*106.4*	*69.6*	*54.0*	*19.1*	*32.0*	*82.8*	*165.6*	*17.5*	*3.0*
209	1-1/2	9.2	2.01	7.50	2.13	5.44	6.06	1/2	0.88	0.88	4.44	2.99	2.13	0.75	1.26	3.38	6.75	0.69	0.19
	1-5/8	6.8	51.1	190.5	54.1	138.2	153.9	M12	22.4	22.4	112.8	75.9	54.0	19.1	32.0	85.9	171.5	17.5	4.8
210	1-11/16	10.1	2.01	8.13	2.25	6.00	6.68	5/8	1.08	0.81	4.60	3.24	2.31	0.75	1.26	3.69	7.38	0.81	0.12
	1-3/4	10.1	51.1	206.5	57.2	152.4	169.7	M16	27.4	20.6	116.8	82.3	58.7	19.1	32.0	93.7	187.5	20.6	3.0
210 (DLMB)	1-11/16	12.3	2.01	8.12	2.24	6.00	6.68	5/8	1.02	0.75	4.53	3.24	2.25	0.75	1.26	3.69	7.38	0.81	0.12
			51.1	206.2	56.9	152.4	169.7	M16	25.9	19.1	115.1	82.3	57.2	19.1	32.0	93.7	187.5	20.6	3.0
211	1-15/16	12.2	2.25	8.88	2.30	6.38	7.44	5/8	1.21	0.88	4.96	3.69	2.50	0.88	1.37	3.94	7.88	0.81	0.12
	2																		
	50mm	*5.5*	*57.2*	*225.6*	*58.4*	*162.1*	*189.0*	*M16*	*30.7*	*22.4*	*126.0*	*93.7*	*63.5*	*22.4*	*34.8*	*100.1*	*200.2*	*20.6*	*3.0*
212	2-3/16	17.5	2.38	9.50	2.37	6.88	7.94	5/8	1.21	0.88	5.40	4.11	2.75	0.90	1.48	4.25	8.50	0.88	0.12
	2-1/4	17.5	60.5	241.3	60.2	174.8	201.7	M16	30.7	22.4	137.2	104.4	69.9	22.9	37.6	108.0	215.9	22.4	3.0
214	2-7/16	19.4	2.60	10.75	2.69	7.50	8.50	3/4	1.32	0.94	6.09	4.38	3.00	1.06	1.54	4.88	9.76	0.94	0.12
	2-1/2	19.4																	
	65mm	*6.9*	*66.0*	*273.1*	*68.3*	*190.5*	*215.9*	*M18*	*33.5*	*23.9*	*154.7*	*111.3*	*76.2*	*26.9*	*39.1*	*124.0*	*247.9*	*23.9*	*3.0*
215	2-11/16	24.9	*2.40*	*11.75*	*2.88*	*8.50*	*9.50*	*7/8*	*1.44*	*1.00*	*6.75*	*4.69*	*3.50*	*0.82*	*1.58*	*5.48*	*10.96*	*1.04*	*0.12*
			61.0	298.5	73.2	215.9	241.3	M22	36.6	25.4	171.5	119.1	88.9	20.8	40.1	139.2	278.4	26.4	3.0
216	2-15/16	25.4	2.62	11.75	3.00	8.50	9.50	7/8	1.44	1.25	6.97	4.99	3.50	0.88	1.74	5.50	11.00	1.09	0.12
			66.5	298.5	76.2	215.9	241.3	M22	36.6	31.8	177.0	126.7	88.9	22.4	44.2	139.7	279.4	27.7	3.0
218	3-7/16	34.9	2.72	14.00	3.38	10.32	11.62	7/8	1.59	1.31	8.00	5.49	4.00	0.92	1.80	6.60	13.20	1.19	0.12
			69.1	355.6	85.9	262.1	295.1	M22	40.4	33.3	203.2	139.4	101.6	23.4	45.7	167.6	335.3	30.2	3.0

SELECTION/DIMENSIONS

D-LOK Ball Bearings
DLMAH MEDIUM DUTY AIR HANDLING PILLOW BLOCKS

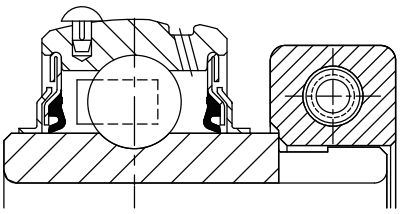

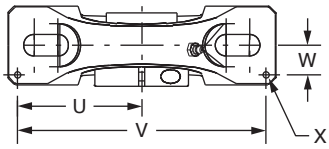

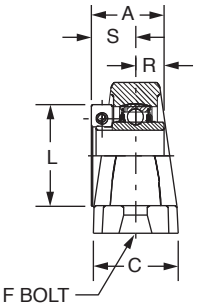

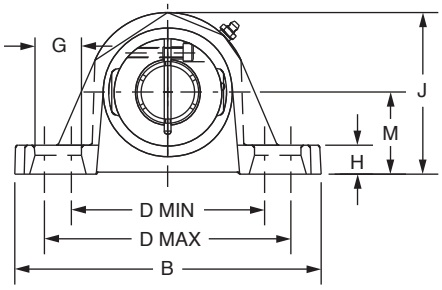

Series	Shaft Size	Part No.	Description
206	1	**128474**	P2B-DLMAH-100
207	1-3/16	**128475**	P2B-DLMAH-103
	1-1/4	**065784**	P2B-DLAH-104
208	1-7/16	**128476**	P2B-DLMAH-107
209	1-1/2	**128477**	P2B-DLMAH-108
	1-5/8	**@**	P2B-DLAH-110L
210	1-11/16	**128478**	P2B-DLMAH-111
	1-3/4	**128479**	P2B-DLMAH-112
211	1-15/16	**128480**	P2B-DLMAH-115
	2	**128481**	P2B-DLMAH-200
212	2-3/16	**128482**	P2B-DLMAH-203
	2-1/4	**128483**	P2B-DLMAH-204
214	2-7/16	**128484**	P2B-DLMAH-207
	2-1/2	**128485**	P2B-DLMAH-208
215	2-11/16	**128488**	P2B-DLMAH-211
216	2-15/16	**128489**	P2B-DLMAH-215
218	3-7/16	**128490**	P2B-DLMAH-307

@ Assembled to order



D-LOK Ball Bearings
DLMAH MEDIUM DUTY AIR HANDLING PILLOW BLOCKS

Series	Shaft Size	Weight lbs	A	B	C	D		F Bolt Dia.	G	H	J	L	M	R	S	U	V	W	X
						min.	max.												
206	1	4.2	1.56 39.6	6.25 158.8	1.75 44.5	4.25 108.0	5.00 127.0	1/2 M12	0.94 23.9	0.75 19.1	3.31 84.1	2.22 56.4	1.69 42.9	0.58 14.7	0.98 24.9	2.88 73.2	5.76 146.3	0.56 14.2	0.12 3.0
207	1-3/16 1-1/4	5.6 4.9	1.75 44.5	6.50 165.1	1.75 44.5	4.68 118.9	5.44 138.2	1/2 M12	0.94 23.9	0.71 18.0	3.75 95.3	2.69 68.3	1.88 47.6	0.67 17.0	1.08 27.4	2.91 73.9	5.82 147.8	0.56 14.2	0.12 3.0
208	1-7/16	7.2	2.01 51.1	7.25 184.2	1.93 49.0	5.18 131.6	5.88 149.4	1/2 M12	0.91 23.1	0.93 23.6	4.19 106.4	2.74 69.6	2.13 54.0	0.75 19.1	1.26 32.0	3.26 82.8	6.52 165.6	0.69 17.5	0.12 3.0
209	1-1/2 1-5/8	9.2 6.8	2.01 51.1	7.50 190.5	2.13 54.1	5.44 138.2	6.06 153.9	1/2 M12	0.88 22.4	0.88 22.4	4.44 112.8	2.99 75.9	2.13 54.0	0.75 19.1	1.26 32.0	3.38 85.9	6.75 171.5	0.69 17.5	0.19 4.8
210	1-11/16 1-3/4	10.1 10.1	2.01 51.1	8.13 206.5	2.25 57.2	6.00 152.4	6.68 169.7	5/8 M16	1.08 27.4	0.81 20.6	4.60 116.8	3.24 82.3	2.31 58.7	0.75 19.1	1.26 32.0	3.69 93.7	7.38 187.5	0.81 20.6	0.12 3.0
211	1-15/16 2	12.3 12.2	2.25 57.2	8.88 225.6	2.30 58.4	6.38 162.1	7.44 189.0	5/8 M16	1.21 30.7	0.88 22.4	4.96 126.0	3.69 93.7	2.50 63.5	0.88 22.4	1.37 34.8	3.94 100.1	7.88 200.2	0.81 20.6	0.12 3.0
212	2-3/16 2-1/4	17.5 17.5	2.38 60.5	9.50 241.3	2.37 60.2	6.88 174.8	7.94 201.7	5/8 M16	1.21 30.7	0.88 22.4	5.40 137.2	4.11 104.4	2.75 69.9	0.90 22.9	1.48 37.6	4.25 108.0	8.50 215.9	0.88 22.4	0.12 3.0
214	2-7/16 2-1/2	19.4 19.4	2.60 66.0	10.75 273.1	2.69 68.3	7.50 190.5	8.50 215.9	3/4 M18	1.32 33.5	0.94 23.9	6.09 154.7	4.38 111.3	3.00 76.2	1.06 26.9	1.54 39.1	4.88 124.0	9.76 247.9	0.94 23.9	0.12 3.0
215	2-11/16	24.9	2.40 61.0	11.75 298.5	2.88 73.2	8.50 215.9	9.50 241.3	7/8 M22	1.44 36.6	1.00 25.4	6.75 171.5	4.69 119.1	3.50 88.9	0.82 20.8	1.58 40.1	5.48 139.2	10.96 278.4	1.04 26.4	0.12 3.0
216	2-15/16	25.4	2.62 66.5	11.75 298.5	3.00 76.2	8.50 215.9	9.50 241.3	7/8 M22	1.44 36.6	1.25 31.8	6.97 177.0	4.99 126.7	3.50 88.9	0.88 22.4	1.74 44.2	5.50 139.7	11.00 279.4	1.09 27.7	0.12 3.0
218	3-7/16	34.9	2.72 69.1	14.00 355.6	3.38 85.9	10.32 262.1	11.62 295.1	7/8 M22	1.59 40.4	1.31 33.3	8.00 203.2	5.49 139.4	4.00 101.6	0.92 23.4	1.80 45.7	6.60 167.6	13.20 335.3	1.19 30.2	0.12 3.0

FEATURES/BENEFITS PAGE B6-3	HOW TO ORDER/NOMENCLATURE PAGE B6-5	SELECTION/DIMENSIONS PAGE B6-10	ACCESSORIES PAGE B6-62

SELECTION/DIMENSIONS

D-LOK Ball Bearings
DL NORMAL DUTY TAPPED BASE PILLOW BLOCKS

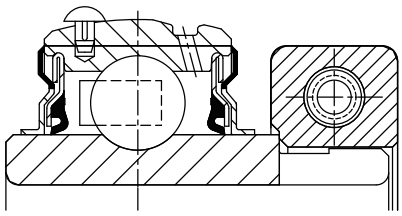

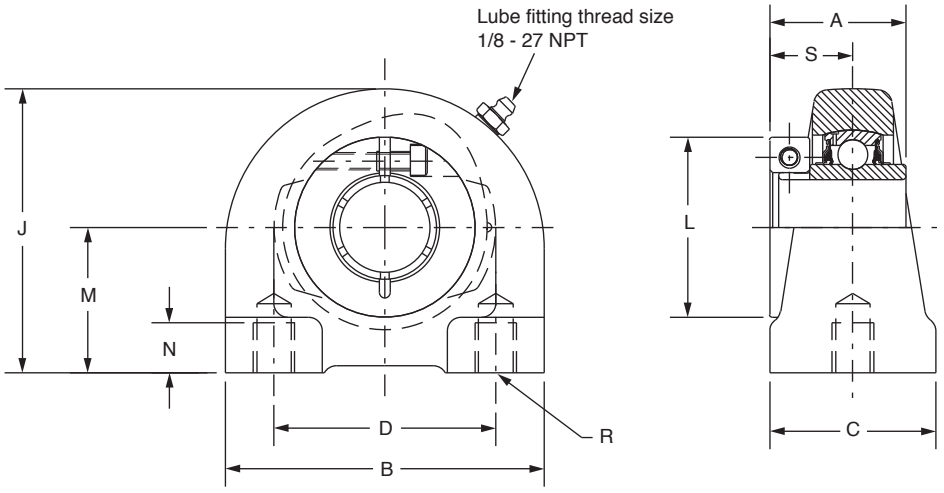

Series	Shaft Size	Part No.	Description
204	3/4	**128742**	TB-DL-012
	20mm	***073914***	*TB-DL-20M*
205	7/8	**053011**	TB-DL-014
	15/16	**128743**	TB-DL-015
	1	**128744**	TB-DL-100
	25mm	***076548***	*TB-DL-25M*
206	1-1/8	**128745**	TB-DL-102
	1-3/16	**128746**	TB-DL-103
	1-1/4	**128747**	TB-DL-104S
	30mm	***073848***	*TB-DL-30M*
207	1-1/4	**128748**	TB-DL-104
	1-3/8	**128749**	TB-DL-106
	1-7/16	**128750**	TB-DL-107
	35mm	***@***	*TB-DL-35M*
208	1-1/2	**128751**	TB-DL-108
	40mm	***073304***	*TB-DL-40M*
209	1-5/8	**128752**	TB-DL-110L
	1-11/16	**128753**	TB-DL-111
	1-3/4	**128754**	TB-DL-112
	45mm	***@***	*TB-DL-45M*
210	1-15/16	**128755**	TB-DL-115
	2	**128756**	TB-DL-200
	50mm	***073479***	*TB-DL-50M*

@ Assembled to order



D-LOK Ball Bearings
DL NORMAL DUTY TAPPED BASE PILLOW BLOCKS

Series	Shaft Size	Weight lbs *kg*	A	B	C	D	J	L	M	N Min. Tap Depth	R Bolt Hole UNC-Thread	S
204	3/4	1.9	1.28	2.88	1.50	2.00	2.56	1.71	1.31	0.50	3/8-16	0.78
	20mm	*0.9*	*32.5*	*73.2*	*38.1*	*50.8*	*65.0*	*43.4*	*33.4*	*12.7*	*M8x1.25*	*19.8*
205	7/8	2.1	1.44	3.00	1.50	2.00	2.81	1.99	1.44	0.50	3/8-16	0.88
	15/16	2.0										
	1	1.9										
	25mm	*1.0*	*36.6*	*76.2*	*38.1*	*50.8*	*71.4*	*50.5*	*36.5*	*12.7*	*M10x1.5*	*22.4*
206	1-1/8	3.6	1.56	4.00	1.50	3.00	3.38	2.22	1.69	0.63	7/16-14	0.98
	1-3/16	3.5										
	1-1/4	3.5										
	30mm	*1.7*	*39.6*	*101.6*	*38.1*	*76.2*	*85.9*	*56.4*	*42.9*	*16.0*	*M10x1.5*	*24.9*
207	1-1/4	4.7	1.75	4.25	1.88	3.25	3.75	2.69	1.88	0.75	1/2-13	1.08
	1-3/8	4.7										
	1-7/16	4.6										
	35mm	*2.2*	*44.5*	*108.0*	*47.8*	*82.6*	*95.3*	*68.3*	*47.6*	*19.1*	*M10x1.5*	*27.4*
208	1-1/2	6.2	2.01	4.63	1.88	3.50	3.94	2.74	1.94	0.75	1/2-13	1.26
	40mm	*2.8*	*51.1*	*117.6*	*47.8*	*88.9*	*100.1*	*69.6*	*49.2*	*19.1*	*M12x1.75*	*32.0*
209	1-5/8	6.7	2.01	5.00	2.00	3.75	4.25	2.99	2.13	0.75	1/2-13	1.26
	1-11/16	6.7										
	1-3/4	6.6										
	45mm	*3.1*	*51.1*	*127.0*	*50.8*	*95.3*	*108.0*	*75.9*	*54.0*	*19.1*	*M12x1.75*	*32.0*
210	1-15/16	8.6	2.01	5.50	2.00	4.00	4.63	3.24	2.25	0.88	5/8-11	1.26
	2	8.5										
	50mm	*3.9*	*51.1*	*139.7*	*50.8*	*101.6*	*117.6*	*82.3*	*57.2*	*22.4*	*M16x2*	*32.0*

SELECTION/DIMENSIONS

DODGE®



Ball Bearings
CC DL FAN AND BLOWER PILLOW BLOCKS

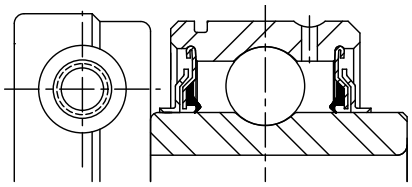

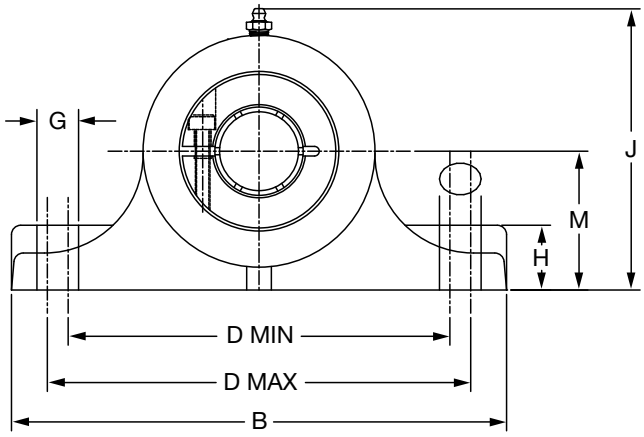

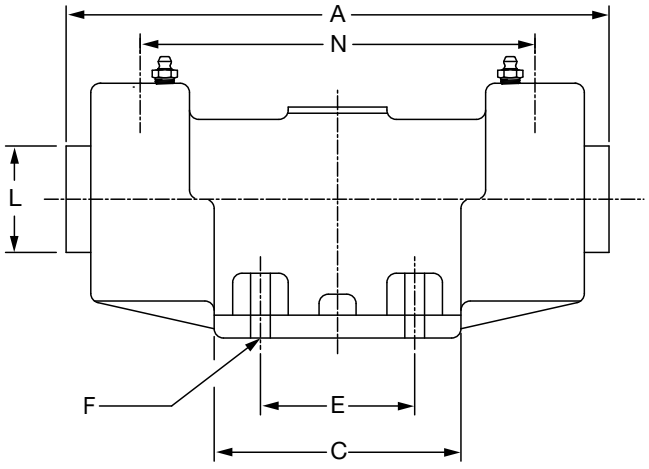

Series	Shaft Size	Part No.	Description
205	15/16	**134186**	F&B-CC-015-DL
	1	**134187**	F&B-CC-100-DL
206	1-1/8	**134188**	F&B-CC-102-DL
	1-3/16	**134189**	F&B-CC-103-DL
207	1-1/4	**134190**	F&B-CC-104-DL
	1-3/8	**134191**	F&B-CC-106-DL
	1-7/16	**134192**	F&B-CC-107-DL
209	1-11/16	**134193**	F&B-CC-111-DL
	1-3/4	**134194**	F&B-CC-112-DL
210	1-15/16	**134195**	F&B-CC-115-DL
211	2-3/16	**134196**	F&B-CC-203-DL
212	2-7/16	**134197**	F&B-CC-207-DL



Ball Bearings
CC DL FAN AND BLOWER PILLOW BLOCKS

Series	Shaft Size	Weight lbs.	A	B	C	D		E	F Bolt Dia.	G	H	J	L	M	Bearing Centers BC
						Min.	Max.								
205	15/16 1	16.000 16.050	7.66	7.75	4.25	6.00	6.50	2.75	3/8	0.63	1.25	4.56	1.99	2.50	5.91
206	1-1/18 1-3/16	16.080 16.240	7.96	7.75	4.25	6.00	6.50	2.75	3/8	0.63	1.25	4.56	2.22	2.50	6.00
207	1-1/4 1-3/8 1-7/16	32.710 32.510 34.260	10.35	10.00	5.50	7.75	8.25	3.50	1/2	0.88	1.56	5.63	2.69	3.00	8.19
209	1-11/16 1-3/4	31.800 31.870	10.55	10.00	5.50	7.75	8.25	3.50	1/2	0.88	1.56	5.63	2.99	3.00	8.03
210	1-15/16	51.350	13.43	12.00	7.00	9.00	10.00	4.00	5/8	1.13	1.75	6.44	3.24	3.50	10.90
211	2-3/16	51.130	13.72	12.00	7.00	9.00	10.00	4.00	5/8	1.13	1.75	6.44	3.69	3.50	10.97
212	2-7/16	55.000	13.86	12.00	7.00	9.00	10.00	4.00	5/8	1.13	1.75	6.44	4.11	3.50	10.91

SELECTION/DIMENSIONS

D-LOK Ball Bearings
DL NORMAL DUTY 2-BOLT FLANGE BEARINGS

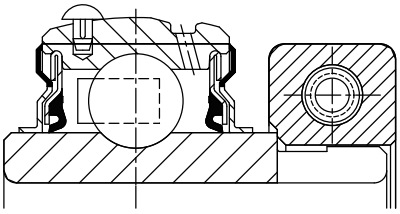

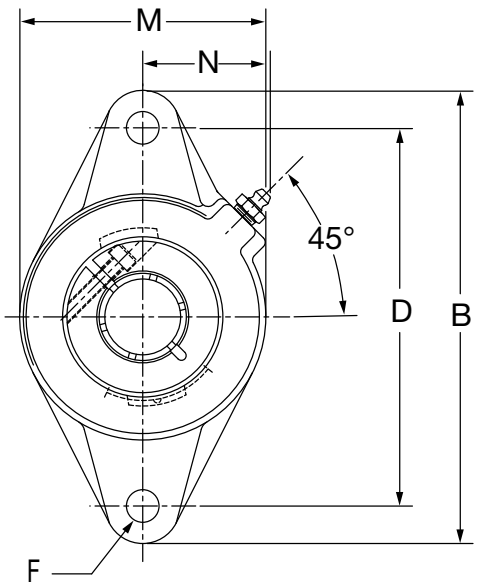

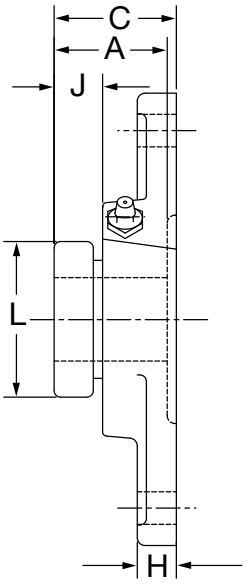

Series	Shaft Size	Standard		No Lube/Sealed for Life (-NL)	
		Part No.	Description	Part No.	Description
204	3/4	**128757**	F2B-DL-012	**052931**	F2B-DL-012-NL
	20mm	***126611***	*F2B-DL-20M*	***065632***	*F2B-DL-20M-NL*
205	7/8	**128758**	F2B-DL-014	**@**	F2B-DL-014-NL
	15/16	**128759**	F2B-DL-015	**059850**	F2B-DL-015-NL
	1	**128760**	F2B-DL-100	**052984**	F2B-DL-100-NL
	25mm	***126612***	*F2B-DL-25M*	***059680***	*F2B-DL-25M-NL*
206	1-1/8	**128761**	F2B-DL-102	**@**	F2B-DL-102-NL
	1-3/16	**128762**	F2B-DL-103	**067970**	F2B-DL-103-NL
	1-1/4	**128763**	F2B-DL-104S	**068643**	F2B-DL-104S-NL
	30mm	***126613***	*F2B-DL-30M*	***062438***	*F2B-DL-30M-NL*
207	1-1/4	**128764**	F2B-DL-104	**058625**	F2B-DL-104-NL
	1-3/8	**128765**	F2B-DL-106	**@**	F2B-DL-106-NL
	1-7/16	**128766**	F2B-DL-107	**056961**	F2B-DL-107-NL
	35mm	***126614***	*F2B-DL-35M*	***065658***	*F2B-DL-35M-NL*
208	1-1/2	**128767**	F2B-DL-108	**059857**	F2B-DL-108-NL
	40mm	***126615***	*F2B-DL-40M*	***062379***	*F2B-DL-40M-NL*
209	1-5/8	**128768**	F2B-DL-110L	**@**	F2B-DL-110L-NL
	1-11/16	**128769**	F2B-DL-111	**056962**	F2B-DL-111-NL
	1-3/4	**128770**	F2B-DL-112	**054142**	F2B-DL-112-NL
	45mm	***126616***	*F2B-DL-45M*	***@***	*F2B-DL-45M-NL*
210	1-15/16	**128771**	F2B-DL-115	**056967**	F2B-DL-115-NL
	2	**128772**	F2B-DL-200	**@**	F2B-DL-200-NL
	50mm	***126617***	*F2B-DL-50M*	***065605***	*F2B-DL-50M-NL*
211	2	**128842**	F2B-DLM-200	**@**	F2B-DLM-200-NL
	2-3/16	**128774**	F2B-DL-203	**@**	F2B-DL-203-NL
	55mm	***126618***	*F2B-DL-55M*	***@***	*F2B-DL-55M-NL*

@ Assembled to order



D-LOK Ball Bearings
DL NORMAL DUTY 2-BOLT FLANGE BEARINGS

Series	Shaft Size	Weight lbs kg	A	B	C	D	F Bolt Dia.	H	J	L	M	N
204	3/4	1.4	1.28	4.41	1.39	3.53	3/8	0.50	0.41	1.71	2.38	1.50
	20mm	*0.6*	*32.5*	*112.0*	*35.3*	*89.7*	*M10*	*12.7*	*10.4*	*43.4*	*60.5*	*38.1*
205	7/8	1.8	1.44	4.88	1.47	3.89	7/16	0.52	0.51	1.99	2.75	1.44
	15/16	1.8										
	1	1.8										
	25mm	*0.8*	*36.6*	*124.0*	*37.3*	*98.8*	*M10*	*13.2*	*13.0*	*50.5*	*69.9*	*36.6*
206	1-1/8	2.4	1.56	5.56	1.60	4.59	7/16	0.50	0.53	2.22	3.13	1.56
	1-3/16	2.4										
	1-1/4	2.3										
	30mm	*1.1*	*39.6*	*141.2*	*40.6*	*116.7*	*M10*	*12.7*	*13.5*	*56.4*	*79.5*	*39.6*
207	1-1/4	3.5	1.75	6.13	1.79	5.12	1/2	0.56	0.57	2.69	3.75	1.84
	1-3/8	3.5										
	1-7/16	3.4										
	35mm	*1.6*	*44.5*	*155.7*	*45.5*	*130.0*	*M12*	*14.2*	*14.5*	*68.3*	*95.3*	*46.7*
208	1-1/2	4.8	2.01	6.75	2.05	5.66	1/2	0.56	0.70	2.74	4.13	1.83
	40mm	*2.2*	*51.1*	*171.5*	*52.1*	*143.8*	*M12*	*14.2*	*17.8*	*69.6*	*104.9*	*46.5*
209	1-5/8	5.2	2.01	7.06	2.06	5.84	1/2	0.63	0.66	2.99	4.38	1.91
	1-11/16	5.2										
	1-3/4	5.2										
	45mm	*2.4*	*51.1*	*179.3*	*52.3*	*148.3*	*M14*	*16.0*	*16.8*	*75.9*	*111.3*	*48.5*
210	1-15/16	6.0	2.01	7.44	2.10	6.19	1/2	0.63	0.63	3.24	4.56	2.03
	2	5.9										
	50mm	*2.7*	*51.1*	*189.0*	*53.3*	*157.2*	*M16*	*16.0*	*16.0*	*82.3*	*115.8*	*51.6*
211	2	9.1	2.25	8.63	2.30	7.25	5/8	0.67	0.71	3.69	5.25	2.27
	2-3/16	9.1										
	55mm	*4.1*	*57.2*	*219.2*	*58.4*	*184.2*	*M16*	*17.0*	*18.0*	*93.7*	*133.4*	*57.7*

SELECTION/DIMENSIONS

D-LOK Ball Bearings
DL NORMAL DUTY 2-BOLT PILOTED FLANGE BEARINGS

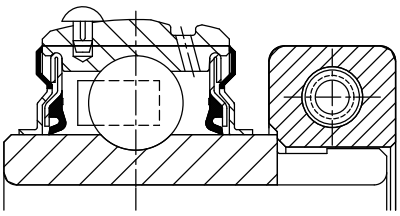

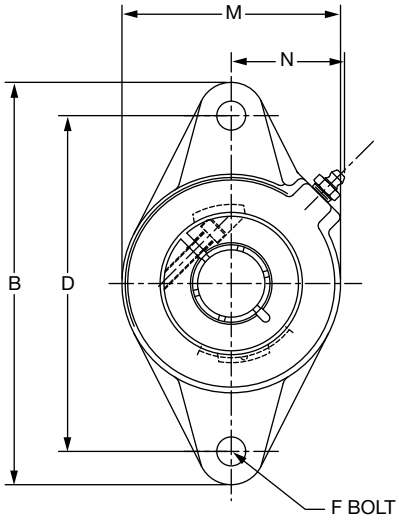

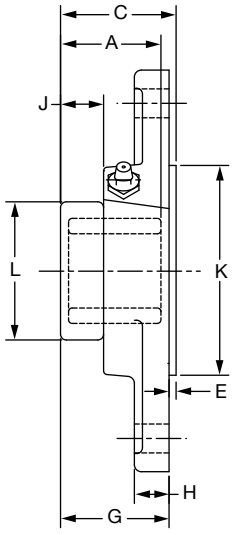

Series	Shaft Size	Part No.	Description
204	3/4	**056696**	F2BZ-DL-012
	20mm	***126646***	*F2BZ-DL-20M*
205	7/8	**067997**	F2BZ-DL-014
	15/16	**@**	F2BZ-DL-015
	1	**056867**	F2BZ-DL-100
	25mm	***126647***	*F2BZ-DL-25M*
206	1-1/8	**@**	F2BZ-DL-102
	1-3/16	**@**	F2BZ-DL-103
	1-1/4	**064473**	F2BZ-DL-104S
	30mm	***126648***	*F2BZ-DL-30M*
207	1-1/4	**074818**	F2BZ-DL-104
	1-3/8	**@**	F2BZ-DL-106
	1-7/16	**@**	F2BZ-DL-107
	35mm	***126649***	*F2BZ-DL-35M*
208	1-1/2	**065770**	F2BZ-DL-108
	40mm	***126650***	*F2BZ-DL-40M*
209	1-5/8	**073753**	F2BZ-DL-110L
	1-11/16	**@**	F2BZ-DL-111
	1-3/4	**@**	F2BZ-DL-112
	45mm	***126651***	*F2BZ-DL-45M*
210	1-15/16	**067958**	F2BZ-DL-115
	2	**065771**	F2BZ-DL-200
	50mm	***126652***	*F2BZ-DL-50M*

@ Assembled to order



D-LOK Ball Bearings
DL NORMAL DUTY 2-BOLT PILOTED FLANGE BEARINGS

Series	Shaft Size	Weight lbs *kg*	A	B	C	D	E	F Bolt Dia.	G	H	J	K	L	M	N
204	3/4	1.4	1.28	4.41	1.53	3.53	0.14	3/8	1.39	0.50	0.41	2.165/2.163	1.71	2.38	1.50
	20mm	*0.6*	*32.5*	*112.0*	*38.9*	*89.7*	*3.6*	*M10*	*35.3*	*12.7*	*10.4*	*54.99/54.94*	*43.4*	*60.5*	*38.1*
205	7/8	1.8	1.44	4.88	1.60	3.89	0.14	7/16	1.47	0.52	0.51	2.362/2.360	1.99	2.75	1.44
	15/16	1.8													
	1	1.8													
	25mm	*0.8*	*36.6*	*124.0*	*40.6*	*98.8*	*3.6*	*M10*	*37.3*	*13.2*	*13.0*	*59.99/59.94*	*50.5*	*69.9*	*36.6*
206	1-1/8	2.4	1.56	5.56	1.72	4.59	0.12	7/16	1.60	0.50	0.53	3.150/3.148	2.22	3.13	1.56
	1-3/16	2.4													
	1-1/4	2.3													
	30mm	*1.1*	*39.6*	*141.2*	*43.7*	*116.7*	*3.0*	*M10*	*40.6*	*12.7*	*13.5*	*80.01/79.96*	*56.4*	*79.5*	*39.6*
207	1-1/4	3.5	1.75	6.13	1.95	5.12	0.16	1/2	1.79	0.56	0.57	3.543/3.541	2.69	3.75	1.84
	1-3/8	3.5													
	1-7/16	3.4													
	35mm	*1.6*	*44.5*	*155.7*	*49.5*	*130.0*	*4.1*	*M12*	*45.5*	*14.2*	*14.5*	*89.99/89.94*	*68.3*	*95.3*	*46.7*
208	1-1/2	4.8	2.01	6.75	2.20	5.66	0.16	1/2	2.05	0.56	0.70	3.937/3.935	2.74	4.13	1.83
	40mm	*2.2*	*51.1*	*171.5*	*55.9*	*143.8*	*4.1*	*M12*	*52.1*	*14.2*	*17.8*	*100.00/99.95*	*69.6*	*104.9*	*46.5*
209	1-5/8	5.2	2.01	7.06	2.22	5.84	0.16	1/2	2.06	0.63	0.66	4.134/4.132	2.99	4.38	1.91
	1-11/16	5.2													
	1-3/4	5.2													
	45mm	*2.4*	*51.1*	*179.3*	*56.4*	*148.3*	*4.1*	*M14*	*52.3*	*16.0*	*16.8*	*105.00/104.95*	*75.9*	*111.3*	*48.5*
210	1-15/16	6.0	2.01	7.44	2.25	6.19	0.16	1/2	2.10	0.63	0.63	4.134/4.132	3.24	4.56	2.03
	2	5.9													
	50mm	*2.6*	*51.1*	*189.0*	*57.2*	*157.2*	*4.1*	*M16*	*53.3*	*16.0*	*16.0*	*105.00/104.95*	*82.3*	*115.8*	*51.6*

FEATURES/BENEFITS PAGE B6-3	HOW TO ORDER/NOMENCLATURE PAGE B6-5	SELECTION/DIMENSIONS PAGE B6-10	ACCESSORIES PAGE B6-62

SELECTION/DIMENSIONS

D-LOK Ball Bearings

DLM MEDIUM DUTY 2-BOLT FLANGE BEARINGS

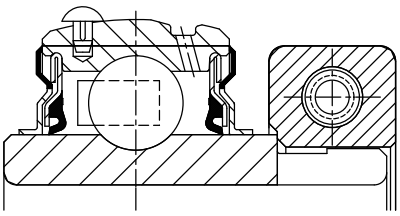

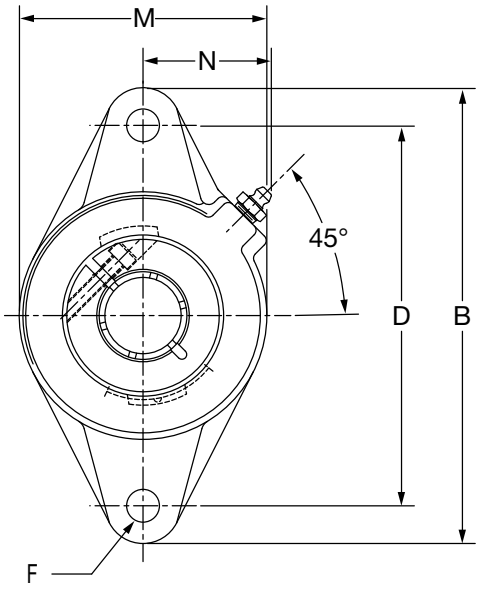

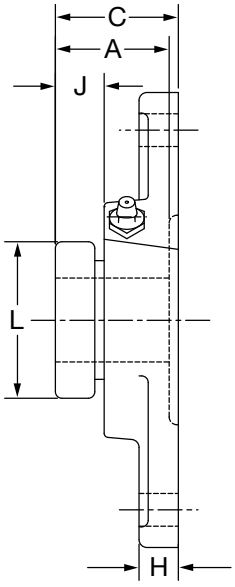

Series	Shaft Size	Part No.	Description
206	1	**128835**	F2B-DLM-100
207	1-3/16	**128836**	F2B-DLM-103
	1-1/4	**128764**	F2B-DL-104
208	1-7/16	**128837**	F2B-DLM-107
	35mm	***126641***	*F2B-DLM-35M*
209	1-1/2	**128838**	F2B-DLM-108
210	1-11/16	**128839**	F2B-DLM-111
	1-3/4	**128840**	F2B-DLM-112
211	1-15/16	**128841**	F2B-DLM-115
	2	**128842**	F2B-DLM-200

Series	Shaft Size	Weight lbs *kg*	A	B	C	D	F Bolt Dia.	H	J	L	M	N
206	1	2.6	1.75	6.13	1.79	5.12	1/2	0.56	0.57	2.69	3.75	1.84
			44.5	155.7	45.5	130.0	M10	14.2	14.5	68.3	95.3	46.7
207	1-3/16	3.7	2.01	6.75	2.05	5.66	1/2	0.56	0.7	2.74	4.13	1.83
	1-1/4	3.5	51.1	171.5	52.1	143.8	M12	14.2	17.8	69.6	104.9	46.5
208	1-7/16	5.0	2.01	7.06	2.06	5.84	1/2	0.63	0.66	2.99	4.38	1.91
	35mm	*2.2*	*51.1*	*179.3*	*52.3*	*148.3*	*M14*	*16.0*	*16.8*	*75.9*	*111.3*	*48.5*
209	1-1/2	5.6	2.01	7.44	2.1	6.19	1/2	0.63	0.63	3.24	4.56	2.03
			51.1	189.0	53.3	157.2	M16	16.0	16.0	82.3	115.8	51.6
210	1-11/16	6.2	2.25	8.63	2.3	7.25	5/8	0.67	0.71	3.69	5.25	2.27
	1-3/4	6.1	57.2	219.2	58.4	184.2	M16	17.0	18.0	93.7	133.4	57.7
211	1-15/16	9.2	2.01	7.06	2.06	5.84	1/2	0.63	0.66	2.99	4.38	1.91
	2	9.1	51.1	179.3	52.3	148.3	M14	16.0	16.8	75.9	111.3	48.5

DODGE®



D-LOK Ball Bearings

DL LFT NORMAL DUTY 2-BOLT FLANGE BEARINGS

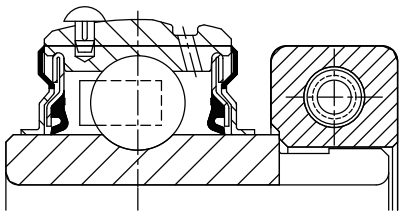

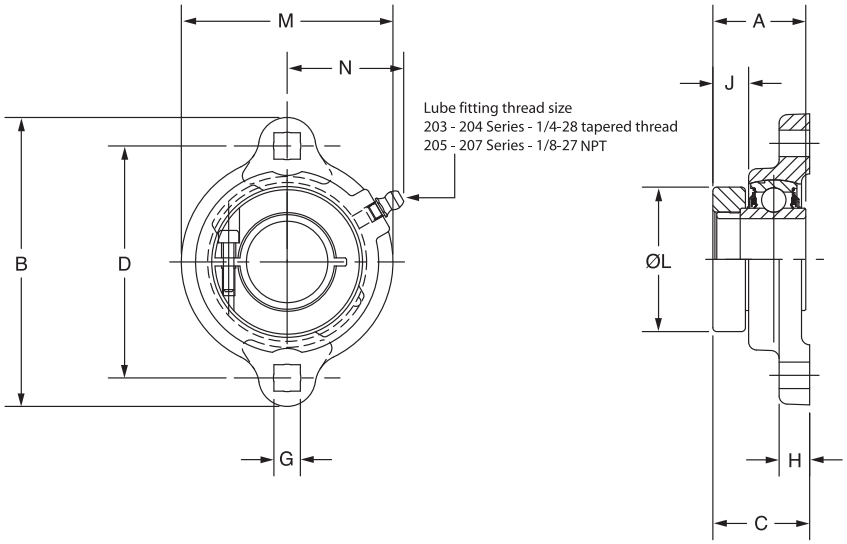

Series	Shaft Size	Part No.	Description
204	3/4	**049466**	LFT-DL-012
	20mm	***073072***	*LFT-DL-20M*
205	7/8	**053140**	LFT-DL-014
	15/16	**062525**	LFT-DL-015
	1	**052668**	LFT-DL-100
206	1-1/8	**@**	LFT-DL-102
	1-3/16	**056889**	LFT-DL-103
	1-1/4	**052535**	LFT-DL-104S
207	1-1/4	**064735**	LFT-DL-104
	1-3/8	**@**	LFT-DL-106
	1-7/16	**049447**	LFT-DL-107

@ Assembled to order

Series	Shaft Size	Weight lbs	A	B	C	D	G	H	J	L	M	N
204	3/4	0.80	1.28	3.56	1.27	2.81	0.34	0.42	0.42	1.71	2.38	1.34
	20mm		*32.5*	*90.4*	*32.3*	*71.4*	*8.6*	*10.7*	*10.7*	*43.4*	*60.5*	*34.0*
205	7/8	0.95	1.44	3.75	1.35	3	0.34	0.42	0.48	1.99	2.63	1.44
	15/16	0.90										
	1	0.85	36.6	95.3	34.3	76.2	8.6	10.7	12.2	50.5	66.8	36.6
206	1-1/8	1.50	1.56	4.44	1.53	3.56	0.41	0.47	0.54	2.22	3.25	1.72
	1-3/16	1.45										
	1-1/4	1.40	39.6	112.8	38.9	90.4	10.4	11.9	13.7	56.4	82.6	43.7
207	1-1/4	1.85	1.75	4.82	1.64	3.94	0.41	0.5	0.57	2.69	3.5	1.83
	1-3/8	1.80										
	1-7/16	1.75	44.5	122.4	41.7	100.1	10.4	12.7	14.5	68.3	88.9	46.5

Lube fitting thread size - 1/4-28 tapered thread

SELECTION/DIMENSIONS

D-LOK Ball Bearings

DL LFT NORMAL DUTY 3-BOLT FLANGE BEARINGS

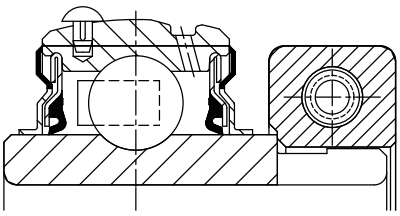

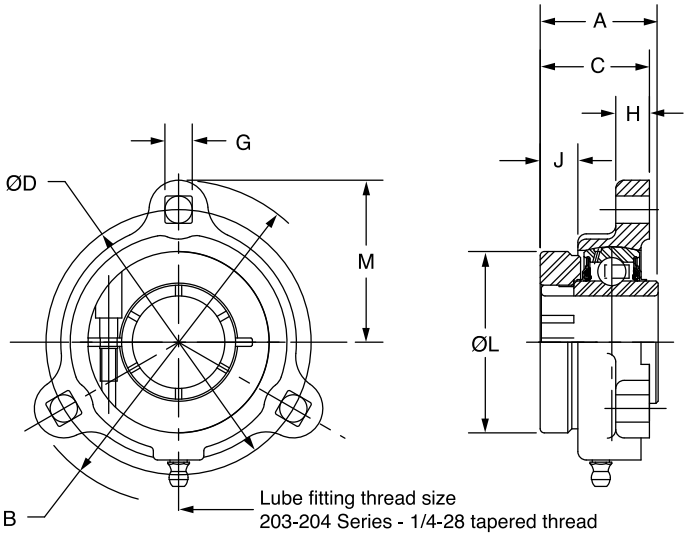

Lube fitting thread size
203-204 Series - 1/4-28 tapered thread
205-207 Series - 18-27 NPT

Series	Shaft Size	Part No.	Description
204	3/4	**049709**	LF-DL-012
205	7/8	**064735**	LF-DL-014
	15/16	**@**	LF-DL-015
	1	**056890**	LF-DL-100
206	1-1/8	**049930**	LF-DL-102
	1-3/16	**056780**	LF-DL-103
	1-1/4	**062781**	LF-DL-104S
207	1-1/4	**064624**	LF-DL-104
	1-3/8	**068663**	LF-DL-106
	1-7/16	**062575**	LF-DL-107

@ Assembled to order

Series	Shaft Size	Weight lbs	A	B	C	D	G	H	J	L	M	N
204	3/4	0.85	1.28	3.56	1.27	2.81	0.34	0.42	0.42	1.71	1.78	1.56
			32.5	90.4	32.3	71.4	8.6	10.7	10.7	43.4	45.2	39.6
205	7/8	1.10	1.44	3.75	1.35	3	0.34	0.42	0.48	1.99	1.88	1.7
	15/16	1.05										
	1	1.00	36.6	95.3	34.3	76.2	8.6	10.7	12.2	50.5	47.8	43.2
206	1-1/8	1.65	1.56	4.44	1.53	3.56	0.41	0.47	0.54	2.22	2.22	2.02
	1-3/16	1.60										
	1-1/4	1.55	39.6	112.8	38.9	90.4	10.4	11.9	13.7	56.4	56.4	51.3
207	1-1/4	1.50	1.75	4.81	1.64	3.94	0.41	0.5	0.57	2.69	2.41	2.14
	1-3/8	2.10										
	1-7/16	2.05	44.5	122.2	41.7	100.1	10.4	12.7	14.5	68.3	61.2	54.4

DODGE®



D-LOK Ball Bearings

DL FB NORMAL DUTY 3-BOLT FLANGE BRACKET BEARINGS

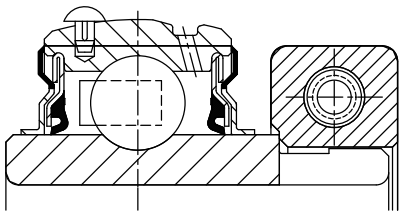

Lube fitting thread size
1/8 - 27 NPT

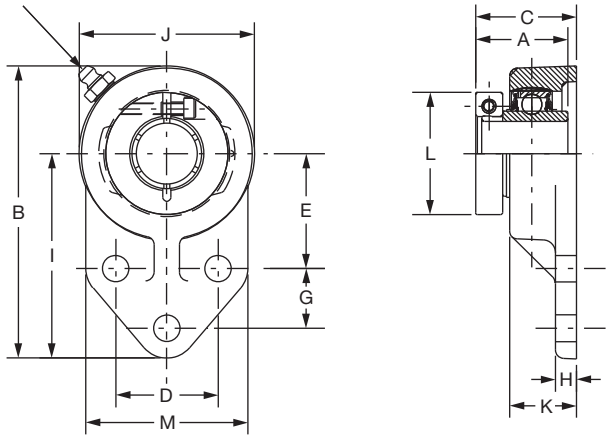

Series	Shaft Size	Part No.	Description
204	3/4	**128796**	FB-DL-012
205	7/8	**128797**	FB-DL-014
	15/16	**128798**	FB-DL-015
	1	**128799**	FB-DL-100
206	1-1/8	**128800**	FB-DL-102
	1-3/16	**128801**	FB-DL-103
	1-1/4	**128802**	FB-DL-104S
207	1-1/4	**128803**	FB-DL-104
	1-3/8	**128804**	FB-DL-106
	1-7/16	**128805**	FB-DL-107
210	1-15/16	**128806**	FB-DL-115
	2	**128807**	FB-DL-200

@ Assembled to order

Series	Shaft Size	Weight lbs	A	B	C	D	E	F Bolt Dia.	G	H	I	J	K	L	M
204	3/4	0.80	1.28	4.25	1.39	1.50	1.69	3/8	0.88	0.31	3.00	2.50	0.98	1.71	2.38
205	7/8	0.95	1.44	4.75	1.60	1.63	1.81	3/8	1.13	0.38	3.38	2.75	1.11	1.99	2.50
	15/16	0.90													
	1	0.85													
206	1-1/8	1.50	1.56	5.38	1.69	1.88	2.06	3/8	1.25	0.38	3.75	3.25	1.13	2.22	2.75
	1-3/16	1.45													
	1-1/4	1.40													
207	1-1/4	1.85	1.75	6.13	1.91	2.00	2.37	1/2	1.25	0.50	4.25	3.75	1.31	2.69	3.25
	1-3/8	1.80													
	1-7/16	1.75													
210	1-15/16	5.7	2.01	7.50	2.14	2.75	2.94	1/2	1.63	0.50	5.19	4.63	1.50	3.24	4.00
	2	5.6													

SELECTION/DIMENSIONS

D-LOK Ball Bearings
DL NORMAL DUTY 4-BOLT FLANGE BEARINGS

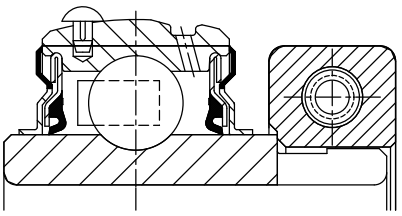

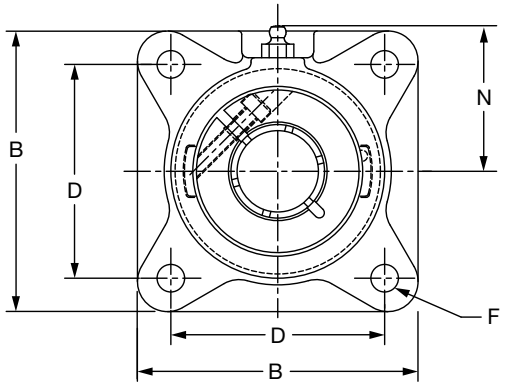

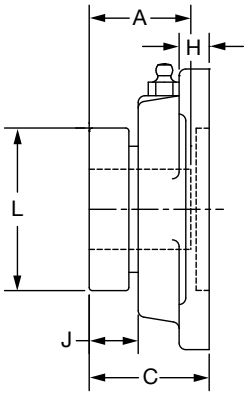

Series	Shaft Size	Standard		No Lube/Sealed for Life (-NL)	
		Part No.	Description	Part No.	Description
204	3/4	**128775**	F4B-DL-012	**@**	F4B-DL-012-NL
	20mm	***126619***	*F4B-DL-20M*	**@**	*F4B-DL-20M-NL*
205	7/8	**128776**	F4B-DL-014	**@**	F4B-DL-014-NL
	15/16	**128777**	F4B-DL-015	**@**	F4B-DL-015-NL
	1	**128778**	F4B-DL-100	**056512**	F4B-DL-100-NL
	25mm	***126620***	*F4B-DL-25M*	**@**	*F4B-DL-25M-NL*
206	1-1/8	**128779**	F4B-DL-102	**@**	F4B-DL-102-NL
	1-3/16	**128780**	F4B-DL-103	**062408**	F4B-DL-103-NL
	1-1/4	**128781**	F4B-DL-104S	**068320**	F4B-DL-104S-NL
	30mm	***126621***	*F4B-DL-30M*	***062491***	*F4B-DL-30M-NL*
207	1-1/4	**128782**	F4B-DL-104	**058898**	F4B-DL-104-NL
	1-3/8	**128783**	F4B-DL-106	**068758**	F4B-DL-106-NL
	1-7/16	**128784**	F4B-DL-107	**059705**	F4B-DL-107-NL
	35mm	***126622***	*F4B-DL-35M*	**@**	*F4B-DL-35M-NL*
208	1-1/2	**128785**	F4B-DL-108	**074781**	F4B-DL-108-NL
	40mm	***126623***	*F4B-DL-40M*	**@**	*F4B-DL-40M-NL*
209	1-5/8	**128786**	F4B-DL-110L	**@**	F4B-DL-110L-NL
	1-11/16	**128787**	F4B-DL-111	**056970**	F4B-DL-111-NL
	1-3/4	**128788**	F4B-DL-112	**074782**	F4B-DL-112-NL
	45mm	***126624***	*F4B-DL-45M*	**@**	*F4B-DL-45M-NL*
210	1-15/16	**128789**	F4B-DL-115	**056968**	F4B-DL-115-NL
	2	**128790**	F4B-DL-200	**067969**	F4B-DL-200-NL
	50mm	***126625***	*F4B-DL-50M*	***076608***	*F4B-DL-50M-NL*
211	2	**128850**	F4B-DLM-200	**@**	F4B-DLM-200-NL
	2-3/16	**128792**	F4B-DL-203	**@**	F4B-DL-203-NL
	55mm	***126626***	*F4B-DL-55M*	**@**	*F4B-DL-55M-NL*
212	2-1/4	**128852**	F4B-DLM-204	**@**	F4B-DLM-204-NL
	2-7/16	**128794**	F4B-DL-207	**073279**	F4B-DL-207-NL
	60mm	***126627***	*F4B-DL-60M*	***062475***	*F4B-DL-60M-NL*
214	2-1/2	**128854**	F4B-DLM-208	**@**	F4B-DLM-208-NL
	2-11/16	**128795**	F4B-DL-211	**062407**	F4B-DL-211-NL
	70mm	***126628***	*F4B-DL-70M*	**@**	*F4B-DL-70M-NL*
215	2-15/16	**062152**	F4B-DL-215	**@**	F4B-DL-215-NL

@ Assembled to order



D-LOK Ball Bearings
DL NORMAL DUTY 4-BOLT FLANGE BEARINGS

Series	Shaft Size	Weight lbs *kg*	A	B	C	D	F Bolt Dia.	H	J	L	N
204	3/4	1.7	1.28	3.38	1.39	2.5	3/8	0.44	0.41	1.71	1.94
	20mm	*0.8*	*32.5*	*85.9*	*35.3*	*63.5*	*M10*	*11.2*	*10.4*	*43.4*	*49.3*
205	7/8	2.2	1.44	3.75	1.47	2.75	7/16	0.5	0.51	1.99	2.06
	15/16	2.2									
	1	2.2									
	25mm	*1.0*	*36.6*	*95.3*	*37.3*	*69.9*	*M10*	*12.7*	*13.0*	*50.5*	*52.3*
206	1-1/8	3.8	1.56	4.25	1.60	3.25	7/16	0.50	0.53	2.22	2.19
	1-3/16	3.7									
	1-1/4	3.7									
	30mm	*1.7*	*39.6*	*108.0*	*40.6*	*82.6*	*M10*	*12.7*	*13.5*	*56.4*	*55.6*
207	1-1/4	4.4	1.75	4.75	1.79	3.63	1/2	0.56	0.57	2.69	2.44
	1-3/8	4.4									
	1-7/16	4.3									
	35mm	*2.0*	*44.5*	*120.7*	*45.5*	*92.2*	*M12*	*14.2*	*14.5*	*68.3*	*62.0*
208	1-1/2	5.8	2.01	5.13	2.05	4.00	1/2	0.56	0.70	2.74	2.38
	40mm	*2.6*	*51.1*	*130.3*	*52.1*	*101.6*	*M12*	*14.2*	*17.8*	*69.6*	*60.5*
209	1-5/8	6.0	2.01	5.38	2.06	4.13	9/16	0.63	0.66	2.99	2.75
	1-11/16	6.0									
	1-3/4	5.9									
	45mm	*2.7*	*51.1*	*136.7*	*52.3*	*104.9*	*M14*	*16.0*	*16.8*	*75.9*	*69.9*
210	1-15/16	7.0	2.01	5.63	2.10	4.38	9/16	0.63	0.63	3.24	2.88
	2	6.9									
	50mm	*3.1*	*51.1*	*143.0*	*53.3*	*111.3*	*M14*	*16.0*	*16.0*	*82.3*	*73.2*
211	2	11.0	2.25	6.50	2.30	5.13	5/8	0.69	0.71	3.69	3.25
	2-3/16	11.0									
	55mm	*5.0*	*57.2*	*165.1*	*58.4*	*130.3*	*M16*	*17.5*	*18.0*	*93.7*	*82.6*
212	2-1/4	13.3	*2.38*	*6.88*	*2.45*	*5.63*	*5/8*	*0.69*	*0.73*	*4.11*	*3.50*
	2-7/16	13.0									
	60mm	*5.9*	*60.5*	*174.8*	*62.2*	*143.0*	*M16*	*17.5*	*18.5*	*104.4*	*88.9*
214	2-1/2	14.6	2.60	7.38	2.85	5.88	5/8	0.69	0.66	4.38	3.69
	2-11/16	14.6									
	70mm	*6.6*	*66.0*	*187.5*	*72.4*	*149.4*	*M16*	*17.5*	*16.8*	*111.3*	*93.7*
215	2-15/16	18.8	2.40	7.75	2.99	6.00	3/4	1.00	0.74	4.69	3.88
			61.0	*196.9*	*75.9*	*152.4*	*M18*	*25.4*	*18.8*	*119.1*	*98.6*

FEATURES/BENEFITS PAGE B6-3 | HOW TO ORDER/NOMENCLATURE PAGE B6-5 | SELECTION/DIMENSIONS PAGE B6-10 | ACCESSORIES PAGE B6-62

SELECTION/DIMENSIONS

D-LOK Ball Bearings
DLM MEDIUM DUTY 4-BOLT FLANGE BEARINGS

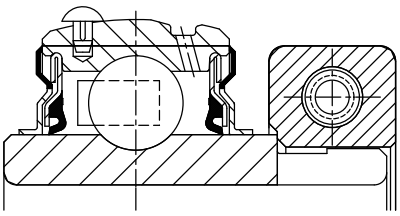

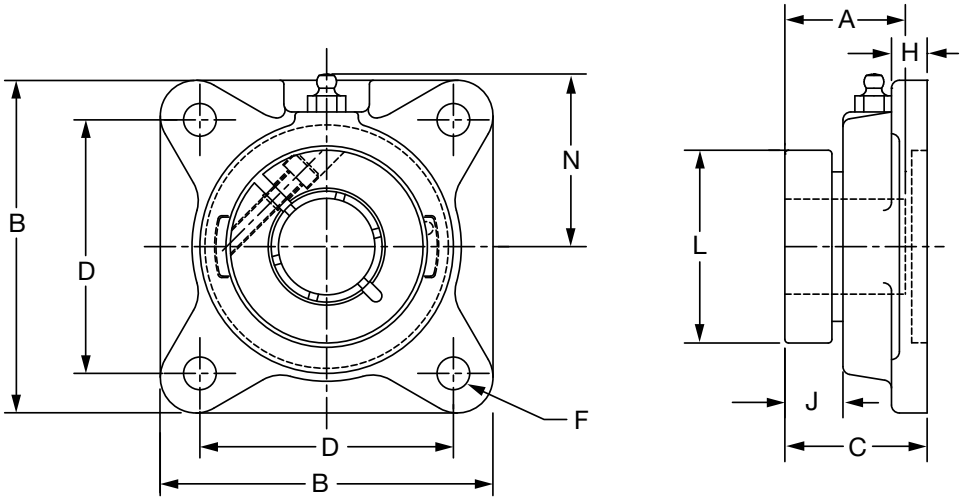

Series	Shaft Size	Part No.	Description
206	1	**128843**	F4B-DLM-100
207	1-3/16	**128844**	F4B-DLM-103
	1-1/4	**128782**	F4B-DL-104
208	1-7/16	**128845**	F4B-DLM-107
	35mm	***126642***	*F4B-DLM-35M*
209	1-1/2	**128846**	F4B-DLM-108
	1-5/8	**128786**	F4B-DL-110L
210	1-11/16	**128847**	F4B-DLM-111
	1-3/4	**128848**	F4B-DLM-112
211	1-15/16	**128849**	F4B-DLM-115
	2	**128850**	F4B-DLM-200
212	2-3/16	**128851**	F4B-DLM-203
	2-1/4	**128852**	F4B-DLM-204
214	2-7/16	**128853**	F4B-DLM-207
	2-1/2	**128854**	F4B-DLM-208
	65mm	***126643***	*F4B-DLM-65M*
215	2-11/16	**062263**	F4B-DLM-211
216	2-15/16	**058395**	F4B-DLM-215
218	3-7/16	**073338**	F4B-DLM-307

@ Assembled to order



D-LOK Ball Bearings
DLM MEDIUM DUTY 4-BOLT FLANGE BEARINGS

Series	Shaft Size	Weight lbs *kg*	A	B	C	D	F Bolt Dia.	H	J	L	N
206	1	3.8	1.56 39.6	4.25 108.0	1.6 40.6	3.25 82.6	7/16 M10	0.5 12.7	0.53 13.5	2.22 56.4	2.19 55.6
207	1-3/16 1-1/4	4.4 3.7	1.75 44.5	4.75 120.7	1.79 45.5	3.63 92.2	1/2 M12	0.56 14.2	0.57 14.5	2.69 68.3	2.44 62.0
208	1-7/16 *35mm*	5.9 *2.2*	2.01 *51.1*	5.13 *130.3*	2.05 *52.1*	4 *101.6*	1/2 *M12*	0.56 *14.2*	0.7 *17.8*	2.74 *69.6*	2.38 *60.5*
209	1-1/2 1-5/8	6.4 6.0	2.01 51.1	5.38 136.7	2.06 52.3	4.13 104.9	9/16 M14	0.63 16.0	0.66 16.8	2.99 75.9	2.75 69.9
210	1-11/16 1-3/4	7.4 7.3	2.01 51.1	5.63 143.0	2.10 53.3	4.38 111.3	9/16 M14	0.63 16.0	0.63 16.0	3.24 82.3	2.88 73.2
211	1-15/16 2	11.1 11.0	2.25 57.2	6.50 165.1	2.3 58.4	5.13 130.3	5/8 M16	0.69 17.5	0.71 18.0	3.69 93.7	3.25 82.6
212	2-3/16 2-1/4	13.3 13.3	2.38 60.5	6.88 174.8	2.45 62.2	5.63 143.0	5/8 M16	0.69 17.5	0.73 18.5	4.11 104.4	3.5 88.9
214	2-7/16 2-1/2 *65mm*	14.8 14.6 *6.6*	2.6 *66.0*	7.38 *187.5*	2.85 *72.4*	5.88 *149.4*	5/8 *M16*	0.69 *17.5*	0.66 *16.8*	4.38 *111.3*	3.69 *93.7*
215	2-11/16	20.3	*2.40* 61.0	*7.75* 196.9	*2.99* 75.9	*6.00* 152.4	*3/4* M18	*1* 25.4	*0.74* 18.8	*4.69* 119.1	*3.88* 98.6
216	2-15/16	20.6	2.62 66.5	7.75 196.9	3.33 84.6	6.00 152.4	3/4 M18	0.88 22.4	0.83 21.1	4.99 126.7	4.09 103.9
218	3-7/16	36.1	2.72 69.1	8.44 214.4	3.58 90.9	6.75 171.5	3/4 M18	1.00 25.4	0.79 20.1	5.49 139.4	4.63 117.6

SELECTION/DIMENSIONS

D-LOK Ball Bearings
DL NORMAL DUTY PILOTED FLANGE BEARINGS

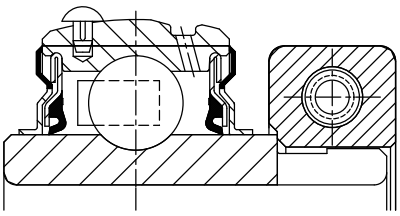

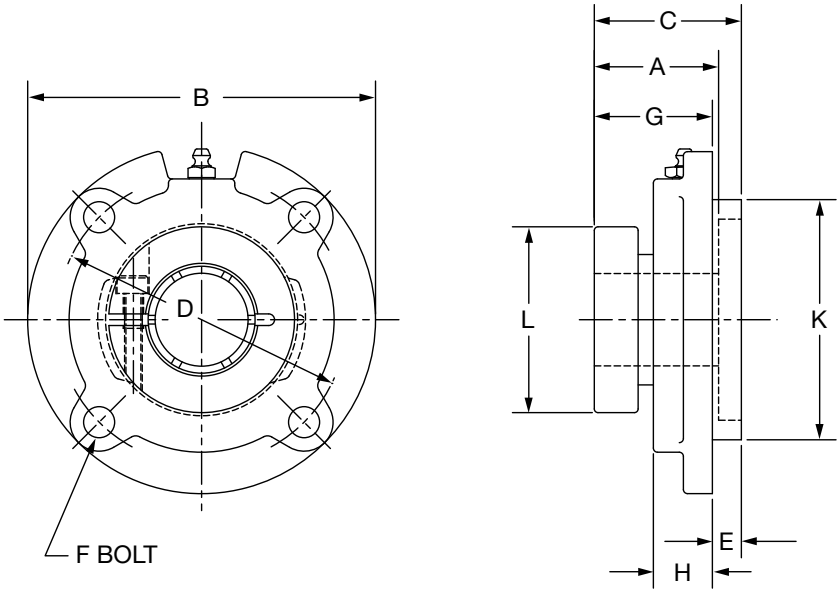

Series	Shaft Size	Standard	
		Part No.	Description
206	1-1/8	**128808**	FC-DL-102
	1-3/16	**128809**	FC-DL-103
	1-1/4	**049610**	FC-DL-104S
	30mm	***126653***	*FC-DL-30M*
207	1-1/4	**128810**	FC-DL-104
	1-3/8	**128811**	FC-DL-106
	1-7/16	**128812**	FC-DL-107
	35mm	***126654***	*FC-DL-35M*
208	1-1/2	**128813**	FC-DL-108
	40mm	***126655***	*FC-DL-40M*
209	1-5/8	**128814**	FC-DL-110L
	1-11/16	**128815**	FC-DL-111
	1-3/4	**128816**	FC-DL-112
	45mm	***126656***	FC-DL-45M
210	1-15/16	**128817**	FC-DL-115
	2	**128818**	FC-DL-200
	50mm	***126657***	*FC-DL-50M*
211	2	**128862**	FC-DLM-200
	2-3/16	**128820**	FC-DL-203
	55mm	***126658***	*FC-DL-55M*
212	2-1/4	**128864**	FC-DLM-204
	2-7/16	**128822**	FC-DL-207
	60mm	***126659***	*FC-DL-60M*
214	2-1/2	**128866**	FC-DLM-208
	2-11/16	**049838**	FC-DL-211
	70mm	***126661***	*FC-DL-70M*



D-LOK Ball Bearings
DL NORMAL DUTY PILOTED FLANGE BEARINGS

Series	Shaft Size	Weight lbs *kg*	A	B	C	D	E	F Bolt Dia.	G	H	K	L
206	1-1/8	3.0	1.56	4.38	1.57	3.63	0.25	3/8	1.32	0.81	3.000/2.998	2.22
	1-3/16	3.0										
	1-1/4	3.0										
	30mm	*1.4*	*39.6*	*111.3*	*39.9*	*92.2*	*6.4*	*M10*	*33.5*	*20.6*	*76.20/76.15*	*56.4*
207	1-1/4	4.1	1.75	5.00	1.81	4.13	0.38	3/8	1.44	0.84	3.375/3.373	2.69
	1-3/8	4.0										
	1-7/16	4.0										
	35mm	*1.6*	*44.5*	*127.0*	*46.0*	*104.9*	*9.7*	*M10*	*36.6*	*21.3*	*85.73/85.67*	*68.3*
208	1-1/2	4.9	2.01	5.25	2.05	4.38	0.44	7/16	1.61	0.89	3.625/3.623	2.74
	40mm	*2.1*	*51.1*	*133.4*	*52.1*	*111.3*	*11.2*	*M12*	*40.9*	*22.6*	*92.08/92.02*	*69.6*
209	1-5/8	6.2	2.01	6.13	2.00	5.13	0.44	1/2	1.57	1.00	4.250/4.248	2.99
	1-11/16	6.1										
	1-3/4	6.1										
	45mm	*2.5*	*51.1*	*155.7*	*50.8*	*130.3*	*11.2*	*M12*	*39.9*	*25.4*	*107.95/107.90*	*75.9*
210	1-15/16	6.2	2.01	6.13	2.05	5.13	0.47	1/2	1.58	0.92	4.250/4.248	3.24
	2	6.2										
	50mm	*2.6*	*51.1*	*155.7*	*52.1*	*130.3*	*11.9*	*M12*	*40.1*	*23.4*	*107.95/107.90*	*82.3*
211	2	8.0	2.25	6.38	2.37	5.38	0.63	1/2	1.75	1.00	4.500/4.498	3.69
	2-3/16	8.0										
	55mm	*3.4*	*57.2*	*162.1*	*60.2*	*136.7*	*16.0*	*M12*	*44.5*	*25.4*	*114.30/114.25*	*93.7*
212	2-1/4	11.6	2.38	7.13	2.60	6.00	0.88	1/2	1.73	1.00	5.000/4.998	4.11
	2-7/16	11.6										
	60mm	*4.9*	*60.5*	*181.1*	*66.0*	*152.4*	*22.4*	*M12*	*43.9*	*25.4*	*127.00/126.95*	*104.4*
214	2-1/2	13.8	2.60	7.63	2.86	6.50	1.13	1/2	1.73	1.06	5.500/5.498	4.38
	2-11/16	13.6										
	70mm	*5.8*	*66.0*	*193.8*	*72.6*	*165.1*	*28.7*	*M12*	*43.9*	*26.9*	*139.70/139.65*	*111.3*

SELECTION/DIMENSIONS

DODGE®



D-LOK Ball Bearings
DLM MEDIUM DUTY PILOTED FLANGE BEARINGS

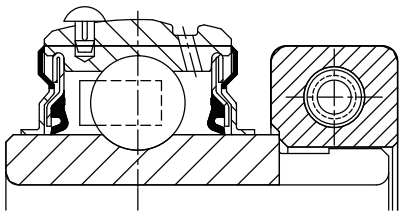

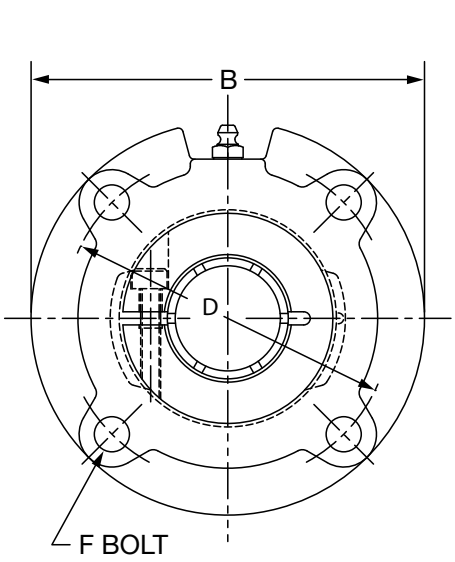

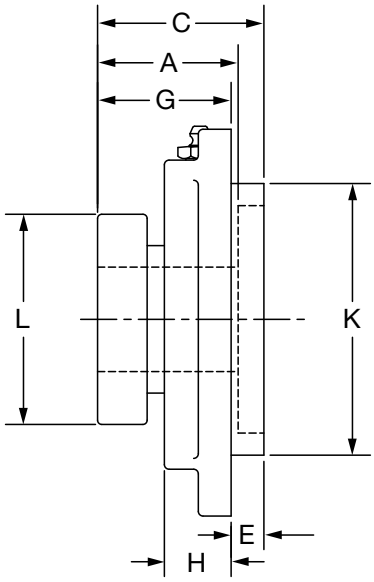

Series	Shaft Size	Standard	
		Part No.	Description
206	1	**128855**	FC-DLM-100
207	1-3/16	**128856**	FC-DLM-103
	1-1/4	**128810**	FC-DL-104
208	1-7/16	**128857**	FC-DLM-107
	1-1/2	**128813**	FC-DL-108
	35mm	***053784***	*FC-DLM-35M*
209	1-1/2	**128858**	FC-DLM-108L
	1-5/8	**128814**	FC-DL-110L
210	1-11/16	**128859**	FC-DLM-111
	1-3/4	**128860**	FC-DLM-112
211	1-15/16	**128861**	FC-DLM-115
	2	**128862**	FC-DLM-200
212	2-3/16	**128863**	FC-DLM-203
	2-1/4	**128864**	FC-DLM-204
214	2-7/16	**128865**	FC-DLM-207
	2-1/2	**128866**	FC-DLM-208
	65mm	***126660***	*FC-DLM-65M*
216	2-15/16	**057475**	FC-DLM-215
218	3-7/16	**062373**	FC-DLM-307

@ Assembled to order



D-LOK Ball Bearings
DLM MEDIUM DUTY PILOTED FLANGE BEARINGS

Series	Shaft Size	Weight lbs *kg*	A	B	C	D	E	F Bolt Dia.	G	H	K	L
206	1	3.1	1.56 39.6	4.38 111.3	1.57 39.9	3.63 92.2	0.25 6.4	3/8 M10	1.32 33.5	0.81 20.6	3.000/2.998 76.20/76.15	2.22 56.4
207	1-3/16 1-1/4	4.1 4.1	1.75 44.5	5.00 127.0	1.81 46.0	4.13 104.9	0.38 9.7	3/8 M10	1.44 36.6	0.84 21.3	3.375/3.373 85.73/85.67	2.69 68.3
208	1-7/16 1-1/2 *35mm*	5.1 4.9 *2.6*	2.01 *51.1*	5.25 *133.4*	2.05 *52.1*	4.38 *111.3*	0.44 *11.2*	7/16 *M12*	1.61 *40.9*	0.89 *22.6*	3.625/3.623 *92.08/92.02*	2.74 *69.6*
209	1-1/2 1-5/8	6.1 6.2	*2.01* 51.1	*6.13* 155.7	*2.00* 50.8	*5.13* 130.3	*0.44* 11.2	*1/2* M12	*1.57* 39.9	*1.00* 25.4	*4.250/4.248* 107.95/107.90	*2.99* 75.9
210	1-11/16 1-3/4	6.2 6.2	2.01 51.1	6.13 155.7	2.05 52.1	5.13 130.3	0.47 11.9	1/2 M12	1.58 40.1	0.92 23.4	4.250/4.248 107.95/107.90	3.24 82.3
211	1-15/16 2	8.0 8.0	2.25 57.2	6.38 162.1	2.37 60.2	5.38 136.7	0.63 16.0	1/2 M12	1.75 44.5	1.00 25.4	4.500/4.498 114.30/114.25	3.69 93.7
212	2-3/16 2-1/4	11.6 11.6	2.38 60.5	7.13 181.1	2.60 66.0	6.00 152.4	0.88 22.4	1/2 M12	1.73 43.9	1.00 25.4	5.000/4.998 127.00/126.95	4.11 104.4
214	2-7/16 2-1/2 *65mm*	13.9 13.8 *5.9*	2.60 *66.0*	7.63 *193.8*	2.86 *72.6*	6.50 *165.1*	1.13 *28.7*	1/2 *M12*	1.73 *43.9*	1.06 *26.9*	5.500/5.498 *139.70/139.65*	4.38 *111.3*
216	2-15/16	18.8	2.62 *66.5*	8.75 *222.3*	3.26 *82.8*	7.50 *190.5*	1.25 *31.8*	5/8 *M16*	2.01 *51.1*	1.19 *30.2*	6.375/6.373 *161.93/161.87*	4.99 *126.7*
218	3-7/16	36.8	2.72 69.1	10.25 260.4	3.53 89.7	8.38 212.9	1.13 28.6	3/4 M18	2.40 61.0	1.63 41.4	7.375/7.373 187.33/187.27	5.49 139.4

SELECTION/DIMENSIONS

D-LOK Ball Bearings
DL NORMAL DUTY NARROW SLOT TAKE-UP BEARINGS

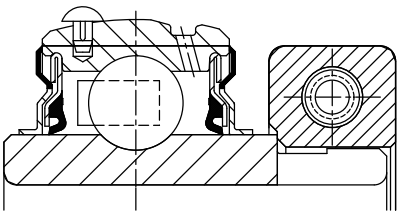

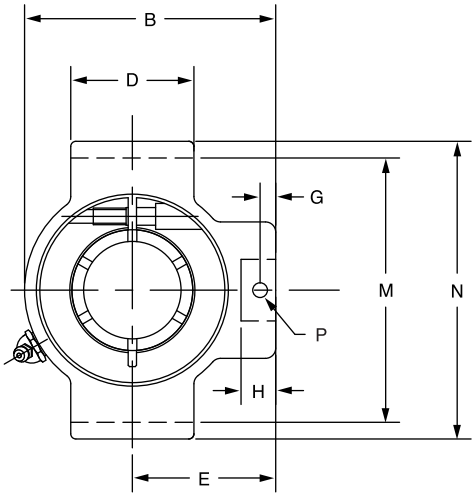

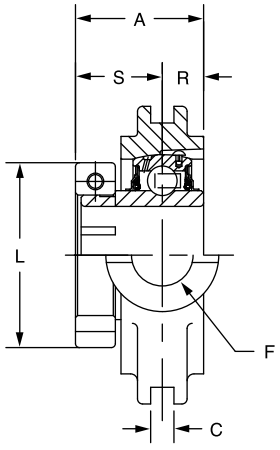

Series	Shaft Size	Standard	
		Part No.	Description
204	3/4	**052626**	NSTU-DL-012
	20mm	***062738***	*NSTU-DL-20M*
205	7/8	**@**	NSTU-DL-014
	15/16	**@**	NSTU-DL-015
	1	**058994**	NSTU-DL-100
	25mm	**@**	*NSTU-DL-25M*
206	1-1/8	**@**	NSTU-DL-102
	1-3/16	**049467**	NSTU-DL-103
	1-1/4	**@**	NSTU-DL-104S
	30mm	**@**	*NSTU-DL-30M*
207	1-1/4	**074372**	NSTU-DL-104
	1-3/8	**068756**	NSTU-DL-106
	1-7/16	**053493**	NSTU-DL-107
	35mm	**@**	*NSTU-DL-35M*
208	1-1/2	**@**	NSTU-DL-108
	40mm	**@**	*NSTU-DL-40M*
209	1-5/8	**@**	NSTU-DL-110L
	1-11/16	**057543**	NSTU-DL-111
	1-3/4	**057658**	NSTU-DL-112
	45mm	**@**	*NSTU-DL-45M*
210	1-15/16	**059880**	NSTU-DL-115
	2	**067903**	NSTU-DL-200
	50mm	**@**	*NSTU-DL-50M*
211	2	**@**	NSTU-DLM-200
	2-3/16	**062281**	NSTU-DL-203
	55mm	**@**	*NSTU-DL-55M*
212	2-1/4	**@**	NSTU-DLM-204
	2-7/16	**064430**	NSTU-DL-207
	60mm	***068321***	*NSTU-DL-60M*

@ Assembled to order.



D-LOK Ball Bearings
DL NORMAL DUTY NARROW SLOT TAKE-UP BEARINGS

Series	Shaft Size	Weight lbs kg	Take-Up Frame Size	A	B	C	D	E	F Screw Dia.	G	H	J	L	M	N	P Pin Dia.	R	S
204	3/4	1.6	NS210	1.28	3.50	0.250	1.50	2.00	3/4	0.44	0.88	1.38	1.71	2.635/2.605	3.13	0.32	0.50	0.78
	20mm	*0.8*		*32.5*	*88.9*	*6.35*	*38.1*	*50.8*	*19.1*	*11.2*	*22.4*	*35.1*	*43.4*	*66.93/66.17*	*79.5*	*8.1*	*12.7*	*19.8*
205	7/8	1.7	NS210	1.44	3.56	0.250	1.50	2.19	3/4	0.44	0.88	1.38	1.99	2.635/2.605	3.13	0.32	0.56	0.88
	15/16	1.6																
	1	1.5																
	25mm	*0.7*		*36.6*	*90.4*	*6.35*	*38.1*	*55.6*	*19.1*	*11.2*	*22.4*	*35.1*	*50.5*	*66.93/66.17*	*79.5*	*8.1*	*14.2*	*22.4*
206	1-1/8	2.8	NS308	1.56	4.31	0.250	2.50	2.69	3/4	0.50	0.94	1.38	2.22	3.510/3.480	4.13	0.32	0.58	0.98
	1-3/16	2.7																
	1-1/4	2.6																
	30mm	*1.2*		*39.6*	*109.5*	*6.35*	*63.5*	*68.3*	*19.1*	*12.7*	*23.9*	*35.1*	*56.4*	*89.15/88.39*	*104.9*	*8.1*	*14.7*	*24.9*
207	1-1/4	2.8	NS308	1.75	4.50	0.250	2.50	2.69	3/4	0.50	0.94	1.38	2.69	3.510/3.480	4.13	0.32	0.67	1.08
	1-3/8	2.6																
	1-7/16	2.5																
	35mm	*1.2*		*44.5*	*114.3*	*6.35*	*63.5*	*68.3*	*19.1*	*12.7*	*23.9*	*35.1*	*68.3*	*89.15/88.39*	*104.9*	*8.1*	*17.0*	*27.4*
208	1-1/2	4.7	NS400	2.01	5.38	0.313	3.00	3.25	7/8	0.66	1.16	1.63	2.74	4.015/3.985	4.75	0.38	0.75	1.26
	40mm	*2.1*		*51.1*	*136.7*	*7.95*	*76.2*	*82.6*	*22.2*	*16.8*	*29.5*	*41.4*	*69.6*	*101.98/101.22*	*120.7*	*9.7*	*19.1*	*32.0*
209	1-5/8	4.9	NS400	2.01	5.44	0.313	3.00	3.25	7/8	0.72	1.22	1.63	2.99	4.015/3.985	4.75	0.38	0.75	1.26
	1-11/16	4.8																
	1-3/4	4.7																
	45mm	*2.1*		*51.1*	*138.2*	*7.95*	*76.2*	*82.6*	*22.2*	*18.3*	*31.0*	*41.4*	*75.9*	*101.98/101.22*	*120.7*	*9.7*	*19.1*	*32.0*
210	1-15/16	4.9	NS400	2.01	5.50	0.313	3.00	3.25	7/8	0.59	1.09	1.63	3.24	4.015/3.985	4.75	0.38	0.75	1.26
	2	4.8																
	50mm	*2.2*		*51.1*	*139.7*	*7.95*	*76.2*	*82.6*	*22.2*	*15.0*	*27.7*	*41.4*	*82.3*	*101.98/101.22*	*120.7*	*9.7*	*19.1*	*32.0*
211	2	6.8	NS407	2.25	6.13	0.313	3.50	3.63	1	0.69	1.28	1.75	3.69	4.448/4.418	5.38	0.44	0.88	1.37
	2-3/16	6.6																
	55mm	*3.0*		*57.2*	*155.7*	*7.95*	*88.9*	*92.2*	*25.4*	*17.5*	*32.5*	*44.5*	*93.7*	*112.98/112.22*	*136.7*	*11.2*	*22.4*	*34.8*
212	2-1/4	8.7	NS415	2.38	6.69	0.313	3.75	3.88	1	0.69	1.28	1.63	4.11	4.947/4.917	5.75	0.44	0.90	1.48
	2-7/16	8.4																
	60mm	*4.9*		*60.5*	*169.9*	*7.95*	*95.3*	*98.6*	*25.4*	*17.5*	*32.5*	*41.4*	*104.4*	*125.65/124.89*	*146.1*	*11.2*	*22.9*	*37.6*

SELECTION/DIMENSIONS

D-LOK Ball Bearings
DLM MEDIUM DUTY NARROW SLOT TAKE-UP BEARINGS

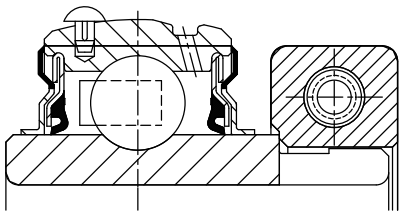

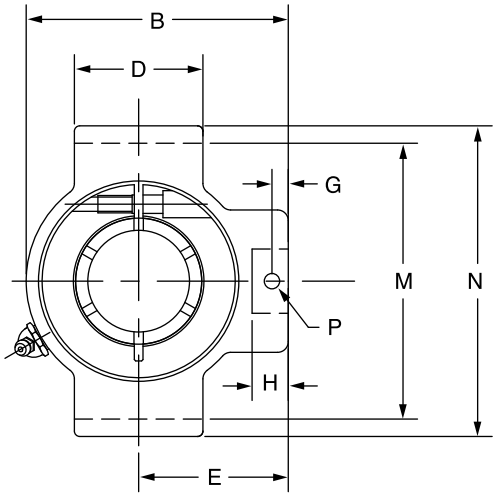

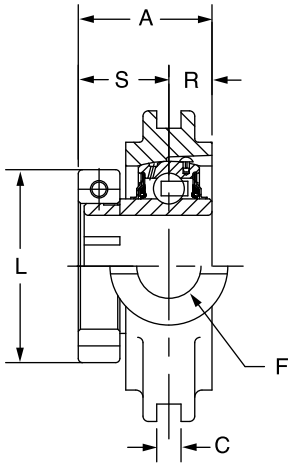

Series	Shaft Size	Part No.	Description
206	1	**067726**	NSTU-DLM-100
207	1-3/16	**@**	NSTU-DLM-103
	1-1/4	**@**	NSTU-DL-104
208	1-7/16	**056779**	NSTU-DLM-107
	35mm	**@**	*NSTU-DLM-35M*
209	1-1/2	**@**	NSTU-DLM-108
	1-5/8	**@**	NSTU-DL-110L
210	1-11/16	**058081**	NSTU-DLM-111
	1-3/4	**@**	NSTU-DLM-112
211	1-15/16	**@**	NSTU-DLM-115
	2	**@**	NSTU-DLM-200
212	2-3/16	**074163**	NSTU-DLM-203
	2-1/4	**@**	NSTU-DLM-204

@ Assembled to order



D-LOK Ball Bearings
DLM MEDIUM DUTY NARROW SLOT TAKE-UP BEARINGS

Series	Shaft Size	Weight lbs *kg*	Take-Up Frame Size	A	B	C	D	E	F Screw Dia.	G	H	J	L	M	N	P Pin Dia.	R	S
206	1	2.6	NS308	1.56 39.6	4.31 109.5	0.250 6.35	2.50 63.5	2.69 68.3	3/4 19.1	0.50 12.7	0.94 23.9	1.38 35.1	2.22 56.4	3.510/3.480 89.15/88.39	4.13 104.9	0.32 8.1	0.58 14.7	0.98 24.9
207	1-3/16 1-1/4	2.8 2.8	NS308	1.75 44.5	4.50 114.3	0.250 6.35	2.50 63.5	2.69 68.3	3/4 19.1	0.50 12.7	0.94 23.9	1.38 35.1	2.69 68.3	3.510/3.480 89.15/88.39	4.13 104.9	0.32 8.1	0.67 17.0	1.08 27.4
208	1-7/16 *35mm*	4.7 *2.1*	NS400	2.01 *51.1*	5.38 *136.7*	0.313 *7.95*	3.00 *76.2*	3.25 *82.6*	7/8 *22.2*	0.66 *16.8*	1.16 *29.5*	1.63 *41.4*	2.74 *69.6*	4.015/3.985 *101.98/101.22*	4.75 *120.7*	0.38 *9.7*	0.75 *19.1*	1.26 *32.0*
209	1-1/2 1-5/8	4.9 4.8	NS400	2.01 51.1	5.44 138.2	0.313 7.95	3.00 76.2	3.25 82.6	7/8 22.2	0.72 18.3	1.22 31.0	1.63 41.4	2.99 75.9	4.015/3.985 101.98/101.22	4.75 120.7	0.38 9.7	0.75 19.1	1.26 32.0
210	1-11/16 1-3/4	4.9 4.8	NS400	2.01 51.1	5.50 139.7	0.313 7.95	3.00 76.2	3.25 82.6	7/8 22.2	0.59 15.0	1.09 27.7	1.63 41.4	3.24 82.3	4.015/3.985 101.98/101.22	4.75 120.7	0.38 9.7	0.75 19.1	1.26 32.0
211	1-15/16 2	6.8 6.8	NS407	2.25 57.2	6.13 155.7	0.313 7.95	3.50 88.9	3.63 92.2	1 25.4	0.69 17.5	1.28 32.5	1.75 44.5	3.69 93.7	4.448/4.418 112.98/112.22	5.38 136.7	0.44 11.2	0.88 22.4	1.37 34.8
212	2-3/16 2-1/4	8.7 8.7	NS415	2.38 60.5	6.69 169.9	0.313 7.95	3.75 95.3	3.88 98.6	1 25.4	0.69 17.5	1.28 32.5	1.63 41.4	4.11 104.4	4.947/4.917 125.65/124.89	5.75 146.1	0.44 11.2	0.90 22.9	1.48 37.6

SELECTION/DIMENSIONS

D-LOK Ball Bearings
DL NORMAL DUTY WIDE SLOT TAKE-UP BEARINGS

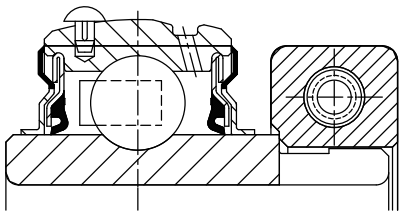

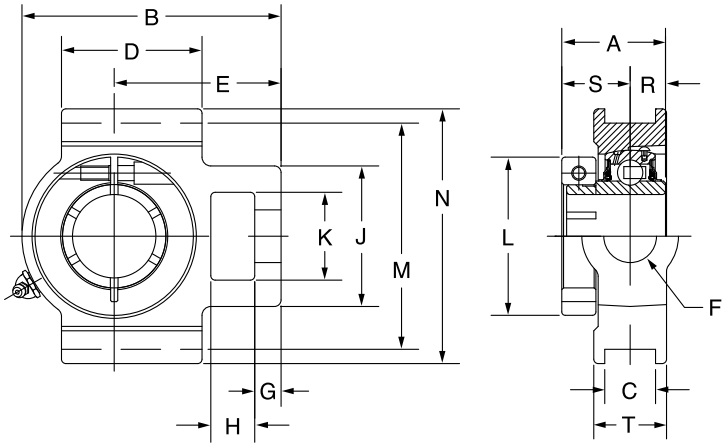

Series	Shaft Size	Standard	
		Part No.	Description
204	3/4	**076777**	WSTU-DL-012
	20mm	***074308***	*WSTU-DL-20M*
205	7/8	**@**	WSTU-DL-014
	15/16	**064698**	WSTU-DL-015
	1	**056605**	WSTU-DL-100
	25mm	**@**	*WSTU-DL-25M*
206	1-1/8	**@**	WSTU-DL-102
	1-3/16	**057770**	WSTU-DL-103
	1-1/4	**068650**	WSTU-DL-104S
	30mm	***049496***	*WSTU-DL-30M*
207	1-1/4	**056638**	WSTU-DL-104
	1-3/8	**062184**	WSTU-DL-106
	1-7/16	**053517**	WSTU-DL-107
	35mm	***062773***	*WSTU-DL-35M-NL*
208	1-1/2	**052546**	WSTU-DL-108
	40mm	**@**	*WSTU-DL-40M*
209	1-5/8	**059593**	WSTU-DL-110L
	1-11/16	**@**	WSTU-DL-111
	1-3/4	**068389**	WSTU-DL-112
	45mm	**@**	*WSTU-DL-45M*
210	1-15/16	**052722**	WSTU-DL-115
	2	**059704**	WSTU-DL-200
	50mm	***075153***	*WSTU-DL-50M*
211	2	**058647**	WSTU-DLM-200
	2-3/16	**062306**	WSTU-DL-203
	55mm	**@**	*WSTU-DL-55M*
212	2-1/4	**062881**	WSTU-DLM-204
	2-7/16	**049747**	WSTU-DL-207
	60mm	**@**	*WSTU-DL-60M*
214	2-1/2	**064300**	WSTU-DLM-208
	2-11/16	**@**	WSTU-DL-211
	70mm	**@**	*WSTU-DL-70M*
215	2-15/16	**064890**	WSTU-DL-215

@ Assembled to order



D-LOK Ball Bearings
DL NORMAL DUTY WIDE SLOT TAKE-UP BEARINGS

Series	Shaft Size	Weight lbs *kg*	Take-Up Frame Size	A	B	C	D	E	F Screw Dia.	G	H	J	K	L	M	N	R	S	T
204	3/4	1.9	WS300	1.28	3.69	0.531	2.00	2.38	5/8	0.38	0.63	2.00	1.25	1.71	2.985/3.015	3.63	0.50	0.78	1.38
	20mm	*0.9*		*32.5*	*93.7*	*13.49*	*50.8*	*60.5*	*15.9*	*9.7*	*16.0*	*50.8*	*31.8*	*43.4*	*75.82/76.58*	*92.2*	*12.7*	*19.8*	*35.1*
205	7/8	2.2	WS300	1.44	3.81	0.531	2.00	2.44	5/8	0.38	0.63	2.00	1.31	1.99	2.985/3.015	3.63	0.56	0.88	1.38
	15/16	2.1																	
	1	2.0																	
	25mm	*1.0*		*36.6*	*96.8*	*13.49*	*50.8*	*62.0*	*15.9*	*9.7*	*16.0*	*50.8*	*33.3*	*50.5*	*75.82/76.58*	*92.2*	*14.2*	*22.4*	*35.1*
206	1-1/8	2.7	WS308	1.56	4.38	0.531	2.25	2.75	3/4	0.38	0.63	2.19	1.44	2.22	3.480/3.510	4.13	0.58	0.98	1.63
	1-3/16	2.6																	
	1-1/4	2.5																	
	30mm	*1.3*		*39.6*	*111.3*	*13.49*	*57.2*	*69.9*	*19.1*	*9.7*	*16.0*	*55.6*	*36.6*	*56.4*	*88.39/89.15*	*104.9*	*14.7*	*24.9*	*41.3*
207	1-1/4	3.7	WS308	1.75	4.87	0.531	2.50	3.06	3/4	0.50	0.63	2.50	1.44	2.69	3.480/3.510	4.13	0.67	1.08	1.63
	1-3/8	3.6																	
	1-7/16	3.5																	
	35mm	*1.6*		*44.5*	*123.7*	*13.49*	*63.5*	*77.7*	*19.1*	*12.7*	*16.0*	*63.5*	*36.6*	*68.3*	*88.39/89.15*	*104.9*	*17.0*	*27.4*	*41.3*
208	1-1/2	6.1	WS400	2.01	5.69	0.688	3.25	3.50	1	0.63	0.75	3.25	1.94	2.74	3.985/4.015	4.5	0.75	1.26	1.94
	40mm	*2.8*		*51.1*	*144.5*	*17.48*	*82.6*	*88.9*	*25.4*	*16.0*	*19.1*	*82.6*	*49.3*	*69.6*	*101.22/101.98*	*114.3*	*19.1*	*32.0*	*49.3*
209	1-5/8	6.1	WS400	2.01	5.63	0.688	3.25	3.44	1	0.63	0.75	3.25	1.94	2.99	3.985/4.015	4.75	0.75	1.26	1.94
	1-11/16	6.0																	
	1-3/4	5.9																	
	45mm	*2.7*		*51.1*	*143.0*	*17.48*	*82.6*	*87.4*	*25.4*	*16.0*	*19.1*	*82.6*	*49.3*	*75.9*	*101.22/101.98*	*120.7*	*19.1*	*32.0*	*49.3*
210	1-15/16	6.4	WS400	2.01	5.82	0.688	3.38	3.56	1	0.63	0.75	3.25	1.94	3.24	3.985/4.015	4.75	0.75	1.26	1.94
	2	6.3																	
	50mm	*2.9*		*51.1*	*147.8*	*17.48*	*85.9*	*90.4*	*25.4*	*16.0*	*19.1*	*82.6*	*49.3*	*82.3*	*101.22/101.98*	*120.7*	*19.1*	*32.0*	*49.3*
211	2	10.1	WS502	2.25	6.69	1.063	3.75	4.19	1-1/4	0.75	1.00	4.00	2.50	3.69	5.110/5.140	5.88	0.88	1.37	2.50
	2-3/16	10.0																	
	55mm	*4.5*		*57.2*	*169.9*	*27.00*	*95.3*	*106.4*	*31.8*	*19.1*	*25.4*	*101.6*	*63.5*	*93.7*	*129.79/130.56*	*149.4*	*22.4*	*34.8*	*63.5*
212	2-1/4	11.2	WS502	2.38	7.50	1.063	4.00	4.69	1-1/4	0.75	1.25	4.00	2.50	4.11	5.110/5.140	5.88	0.90	1.48	2.50
	2-7/16	10.8																	
	60mm	*4.9*		*60.5*	*190.5*	*27.00*	*101.6*	*119.1*	*31.8*	*19.1*	*31.8*	*101.6*	*63.5*	*104.4*	*129.79/130.56*	*149.4*	*22.9*	*37.6*	*63.5*
214	2-1/2	18.0	WS515	2.60	8.56	1.063	4.75	5.38	1-1/2	0.81	1.25	4.38	2.75	4.38	5.923/5.953	6.56	1.06	1.54	2.75
	2-11/16	17.8																	
	70mm	*8.2*		*66.0*	*217.4*	*27.00*	*120.7*	*136.7*	*38.1*	*20.6*	*31.8*	*111.3*	*69.9*	*111.3*	*150.44/151.21*	*166.6*	*26.9*	*39.1*	*69.9*
215	2-15/16	18.9	WS515	2.40	9.13	1.063	4.75	5.50	1-1/2	0.81	1.25	4.38	2.75	4.69	5.923/5.953	6.69	0.82	1.58	2.75
				61.0	231.9	27.00	120.7	139.7	38.1	20.6	31.8	111.3	69.9	119.1	150.44/151.21	169.9	20.8	40.1	69.9

SELECTION/DIMENSIONS

D-LOK Ball Bearings
DLM MEDIUM DUTY WIDE SLOT TAKE-UP BEARINGS

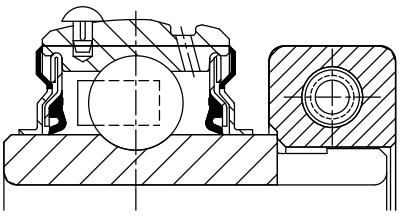

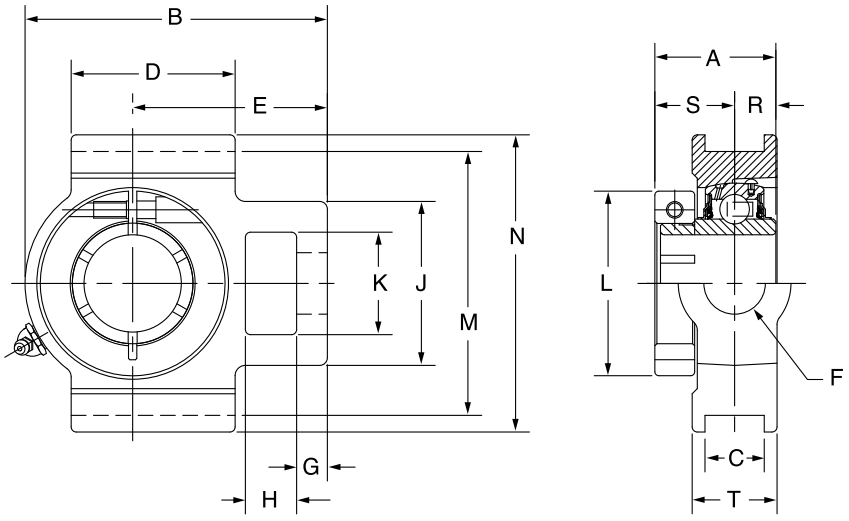

Series	Shaft Size	Standard	
		Part No.	Description
206	1	**049696**	WSTU-DLM-100
207	1-3/16	**068232**	WSTU-DLM-103
	1-1/4	**056638**	WSTU-DL-104
208	1-7/16	**062702**	WSTU-DLM-107
	35mm	***054390***	*WSTU-DLM-35M*
209	1-1/2	**@**	WSTU-DLM-108
	1-5/8	**@**	WSTU-DL-110L
210	1-11/16	**054411**	WSTU-DLM-111
	1-3/4	**@**	WSTU-DLM-112
211	1-15/16	**057266**	WSTU-DLM-115
	2	**058347**	WSTU-DLM-200
212	2-3/16	**065569**	WSTU-DLM-203
	2-1/4	**062881**	WSTU-DLM-204
214	2-7/16	**062285**	WSTU-DLM-207
	2-1/2	**064300**	WSTU-DLM-208
	65mm	**@**	*WSTU-DLM-65M*
215	2-11/16	**@**	WSTU-DLM-211
216	2-15/16	**059758**	WSTU-DLM-215

@ Assembled to order



D-LOK Ball Bearings
DLM MEDIUM DUTY WIDE SLOT TAKE-UP BEARINGS

Series	Shaft Size	Weight lbs kg	Take-Up Frame Size	A	B	C	D	E	F Screw Dia.	G	H	J	K	L	M	N	R	S	T
206	1	4.1	WS308	1.56 39.6	4.38 111.3	0.531 13.49	2.25 57.2	2.75 69.9	3/4 19.1	0.38 9.7	0.63 16.0	2.19 55.6	1.44 36.6	2.22 56.4	3.480/3.510 88.39/89.15	4.13 104.9	0.58 14.7	0.98 24.9	1.63 41.3
207	1-3/16 1-1/4	5.1 3.7	WS308	1.75 44.5	4.87 123.7	0.531 13.49	2.50 63.5	3.06 77.7	3/4 19.1	0.50 12.7	0.63 16.0	2.50 63.5	1.44 36.6	2.69 68.3	3.480/3.510 88.39/89.15	4.13 104.9	0.67 17.0	1.08 27.4	1.63 41.3
208	1-7/16 *35mm*	7.3 *3.5*	WS400	2.01 *51.1*	5.69 *144.5*	0.688 *17.48*	3.25 *82.6*	3.50 *88.9*	1 *25.4*	0.63 *16.0*	0.75 *19.1*	3.25 *82.6*	1.94 *49.3*	2.74 *69.6*	3.985/4.015 *101.22/101.98*	4.50 *114.3*	0.75 *19.1*	1.26 *32.0*	1.94 *49.3*
209	1-1/2 1-5/8	7.2 6.1	WS400	2.01 51.1	5.63 143.0	0.688 17.48	3.25 82.6	3.44 87.4	1 25.4	0.63 16.0	0.75 19.1	3.25 82.6	1.94 49.3	2.99 75.9	3.985/4.015 101.22/101.98	4.75 120.7	0.75 19.1	1.26 32.0	1.94 49.3
210	1-11/16 1-3/4	7.7 7.6	WS400	2.01 51.1	5.82 147.8	0.688 17.48	3.38 85.9	3.56 90.4	1 25.4	0.63 16.0	0.75 19.1	3.25 82.6	1.94 49.3	3.24 82.3	3.985/4.015 101.22/101.98	4.75 120.7	0.75 19.1	1.26 32.0	1.94 49.3
211	1-15/16 2	11.2 11.3	WS502	2.25 57.2	6.69 169.9	1.063 27.00	3.75 95.3	4.19 106.4	1-1/4 31.8	0.75 19.1	1.00 25.4	4.00 101.6	2.50 63.5	3.69 93.7	5.110/5.140 129.79/130.56	5.88 149.4	0.88 22.4	1.37 34.8	2.50 63.5
212	2-3/16 2-1/4	12.6 12.4	WS502	2.38 60.5	7.50 190.5	1.063 27.00	4.00 101.6	4.69 119.1	1-1/4 31.8	0.75 19.1	1.25 31.8	4.00 101.6	2.50 63.5	4.11 104.4	5.110/5.140 129.79/130.56	5.88 149.4	0.90 22.9	1.48 37.6	2.50 63.5
214	2-7/16 2-1/2 *65mm*	19.4 19.2 *9.3*	WS515	2.60 *66.0*	8.56 *217.4*	1.063 *27.00*	4.75 *120.7*	5.38 *136.7*	1-1/2 *38.1*	0.81 *20.6*	1.25 *31.8*	4.38 *111.3*	2.75 *69.9*	4.38 *111.3*	5.923/5.953 *150.44/151.21*	6.56 *166.6*	1.06 *26.9*	1.54 *39.1*	2.75 *69.9*
215	2-11/16	20.2	WS515	*2.40* 61.0	*9.13* 231.9	*1.063* 27.00	*4.75* 120.7	*5.50* 139.7	*1-1/2* 38.1	*0.81* 20.6	*1.25* 31.8	*4.38* 111.3	*2.75* 69.9	*4.69* 119.1	*5.923/5.953* 150.44/151.21	*6.69* 169.9	*0.82* 20.8	*1.58* 40.1	*2.75* 69.9
216	2-15/16	22.9	WS608	2.62 66.5	9.13 231.9	1.063 27.00	4.75 120.7	2.38 60.5	1-1/2 38.1	0.81 20.6	1.25 31.8	4.38 111.3	2.75 69.9	4.99 126.7	6.485/6.515 164.72/165.48	7.25 184.2	0.88 22.4	1.74 44.2	2.75 69.9

FEATURES/BENEFITS PAGE B6-3	HOW TO ORDER/NOMENCLATURE PAGE B6-5	SELECTION/DIMENSIONS PAGE B6-10	ACCESSORIES PAGE B6-62

SELECTION/DIMENSIONS

DODGE®



D-LOK Ball Bearings

DL NORMAL DUTY TOP ANGLE TAKE-UP BEARINGS

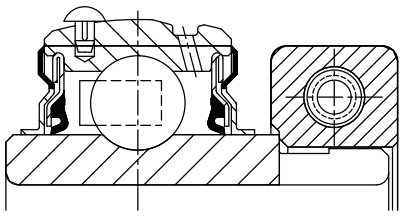

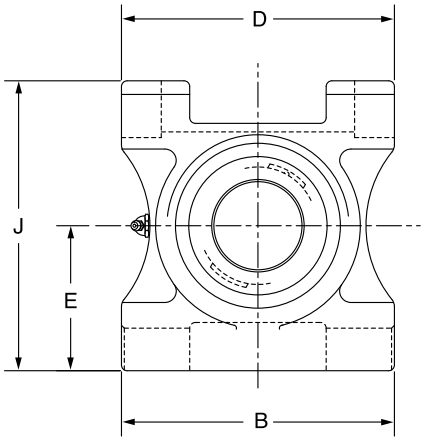

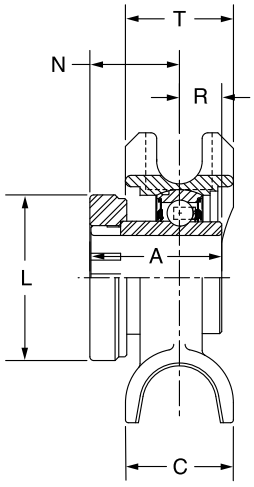

Series	Shaft Size	Part No.	Description
210	1-15/16	**074254**	TP-DL-115
	2	**@**	TP-DL-200
211	2	**@**	TP-DLM-200
	2-3/16	**@**	TP-DL-203
212	2-1/4	**062880**	TP-DLM-204
	2-7/16	**073687**	TP-DL-207
214	2-1/2	**@**	TP-DLM-208
	2-11/16	**@**	TP-DL-211
215	2-15/16	**049415**	TP-DL-215

@ Assembled to order

Series	Shaft Size	Weight lbs	Take-Up Frame Size	A	B	C	D	E	J	L	N	R	T
210	1-15/16	11.4	TP10	2.01	6.50	2.38	6.00	3.25	6.38	3.24	1.26	0.75	2.38
	2	11.2		51.1	165.1	60.5	152.4	82.6	162.1	82.3	32.0	19.1	60.5
211	2	13.7	TP20	2.25	7.00	2.50	6.75	3.38	7.88	3.69	1.37	0.88	2.38
	2-3/16	13.2		57.2	177.8	63.5	171.5	85.9	200.2	93.7	34.8	22.4	60.5
212	2-1/4	17.2	TP30	2.38	7.50	2.75	7.00	3.50	7.44	4.11	1.48	0.90	2.75
	2-7/16	17.1		60.5	190.5	69.9	177.8	88.9	189.0	104.4	37.6	22.9	69.9
214	2-1/2	22.5	TP40	2.60	8.50	2.50	8.00	4.00	8.31	4.38	1.54	1.06	2.75
	2-11/16	22.3		66.0	215.9	63.5	203.2	101.6	211.1	111.3	39.1	26.9	69.9
215	2-15/16	22.4	TP40	2.40	8.50	2.50	8.00	4.00	8.31	4.69	1.58	0.82	2.75
				61.0	215.9	63.5	203.2	101.6	211.1	119.1	40.1	20.8	69.9



D-LOK Ball Bearings
DLM MEDIUM DUTY TOP ANGLE TAKE-UP BEARINGS

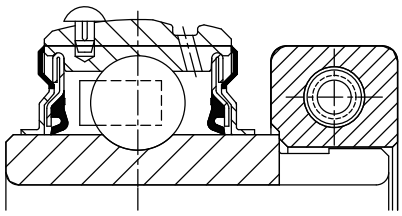

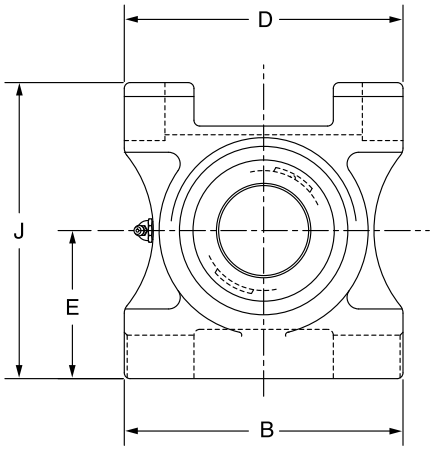

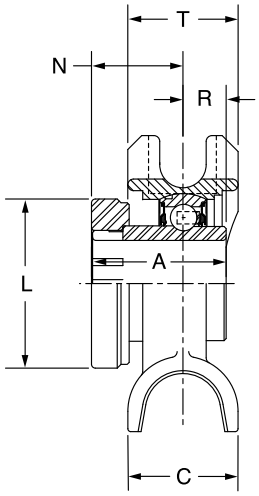

Series	Shaft Size	Part No.	Description
210	1-11/16	@	TP-DLM-111
	1-3/4	@	TP-DLM-112
211	1-15/16	075286	TP-DLM-115
	2	@	TP-DLM-200
212	2-3/16	@	TP-DLM-203
	2-1/4	062880	TP-DLM-204
214	2-7/16	049813	TP-DLM-207
	2-1/2	@	TB-DLM-208
215	2-11/16	@	TP-DLM-211
216	2-15/16	049855	TP-DLM-215
218	3-7/16	@	TP-DLM-307

@ Assembled to order

Series	Shaft Size	Weight lbs	Take-Up Frame Size	A	B	C	D	E	J	L	N	R	T
210	1-11/16	11.6	TP10	2.01	6.50	2.38	6.00	3.25	6.38	3.24	1.26	0.75	2.38
	1-3/4	11.2		51.1	165.1	60.5	152.4	82.6	162.1	82.3	32.0	19.1	60.5
211	1-15/16	14.0	TP20	2.25	7.00	2.50	6.75	3.38	7.88	3.69	1.37	0.88	2.38
	2	13.7		57.2	177.8	63.5	171.5	85.9	200.2	93.7	34.8	22.4	60.5
212	2-3/16	17.4	TP30	2.38	7.50	2.75	7.00	3.50	7.44	4.11	1.48	0.90	2.75
	2-1/4	17.2		60.5	190.5	69.9	177.8	88.9	189.0	104.4	37.6	22.9	69.9
214	2-7/16	22.9	TP40	2.60	8.50	2.50	8.00	4.00	8.31	4.38	1.54	1.06	2.75
	2-1/2	22.5		66.0	215.9	63.5	203.2	101.6	211.1	111.3	39.1	26.9	69.9
215	2-11/16	26.2	TP40	2.40	8.50	2.50	8.00	4.00	8.31	4.69	1.58	0.82	2.75
				61.0	215.9	63.5	203.2	101.6	211.1	119.1	40.1	20.8	69.9
216	2-15/16	31.0	TP50	2.62	9.50	2.75	9.00	4.50	9.63	4.99	1.74	0.88	3.13
				66.5	241.3	69.9	228.6	114.3	244.6	126.7	44.2	22.4	79.5
218	3-7/16	41.4	TP50	2.72	11.00	3.13	10.50	5.50	11.00	5.49	1.80	0.92	3.13
				69.1	279.4	79.5	266.7	139.7	279.4	139.4	45.7	23.4	79.5

SELECTION/DIMENSIONS

D-LOK Ball Bearings
DL NORMAL DUTY SCREW CONVEYOR HANGER BEARINGS

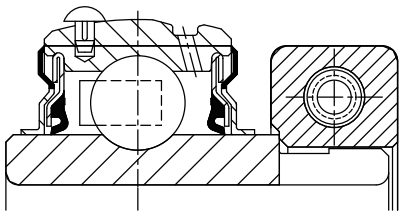

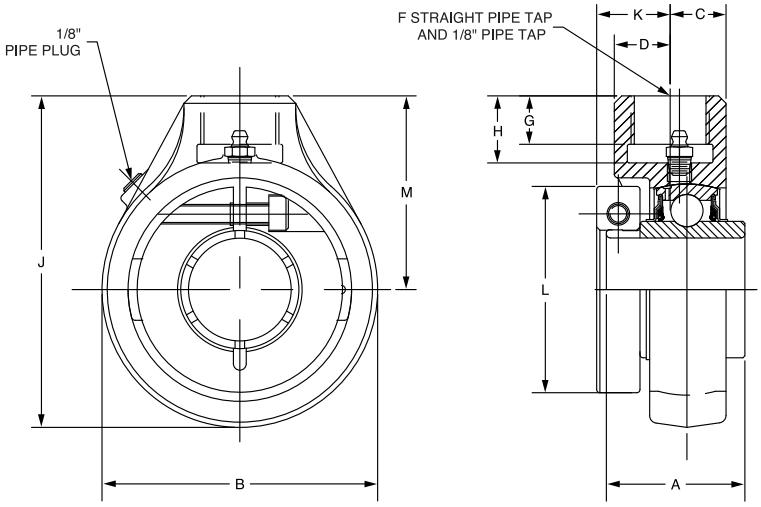

Series	Shaft Size	Part No.	Description
206	1	@	SCHB-DL-100
	1-1/8	@	SCHB-DL-102
207	1-3/16	@	SCHB-DL-103
	1-1/4	@	SCHB-DL-104
	1-3/8	**073069**	SCHB-DL-106
208	1-7/16	@	SCHB-DL-107
	1-1/2	**068608**	SCHB-DL-108
210	1-11/16	@	SCHB-DL-111
	1-3/4	@	SCHB-DL-112
	1-15/16	**062443**	SCHB-DL-115
	2	@	SCHB-DL-200
212	2-3/16	@	SCHB-DL-203
	2-1/4	@	SCHB-DL-204
	2-7/16	**049781**	SCHB-DL-207
216	2-15/16	@	SCHB-DL-215
218	3-7/16	@	SCHB-DL-307

@ Assembled to order

Series	Shaft Size	Weight lbs.	A	B	C	D	F* (NPSM)	G	H	J	K	L	M
206	1	3.0	1.56	3.13	0.53	1.03	3/4-14	0.75	0.94	4.06	0.93	2.22	2.50
	1-1/8	2.7											
207	1-3/16	3.4	1.75	3.88	0.82	0.82	3/4-14	0.63	0.94	4.69	1.02	2.69	2.75
	1-1/4	3.3											
	1-3/8	3.1											
208	1-7/16	4.0	2.01	4.00	0.83	0.83	3/4-14	0.63	0.94	4.88	1.09	2.74	2.88
	1-1/2	3.6											
210	1-11/16	5.4	2.01	4.63	0.94	1.78	1 - 11-1/2	0.81	1.13	5.56	0.98	3.24	3.25
	1-3/4	5.3											
	1-15/16	5.2											
	2	5.0											
212	2-3/16	9.6	2.38	5.50	1.16	1.78	1-1/4 - 11-1/2	1.13	1.44	6.75	1.13	4.11	4.00
	2-1/4	9.4											
	2-7/16	9.2											
216	2-15/16	16.9	2.62	7.00	1.36	1.45	1-1/2 - 11-1/2	1.25	1.69	8.38	1.41	4.99	4.88
218	3-7/16	23.0	2.72	8.31	1.76	1.74	2 - 11-1/2	1.75	2.19	10.16	1.58	5.49	6.00

Note: Sizes 1, 1-3/16, 1-7/16, 1-11/16, 1-3/4, 2-3/16, 2-1/4, 2-15/16, 3, 3-7/16, & 3-1/2 use DLM inserts

* Use straight thread for the pipe. Bearing can be secured with a heavy locknut.

Pipe plug and lube fitting are factory installed and may be reversed from position shown.

DODGE®



D-LOK Ball Bearings
DL NORMAL DUTY CYLINDRICAL UNITS

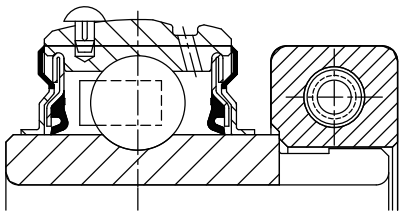

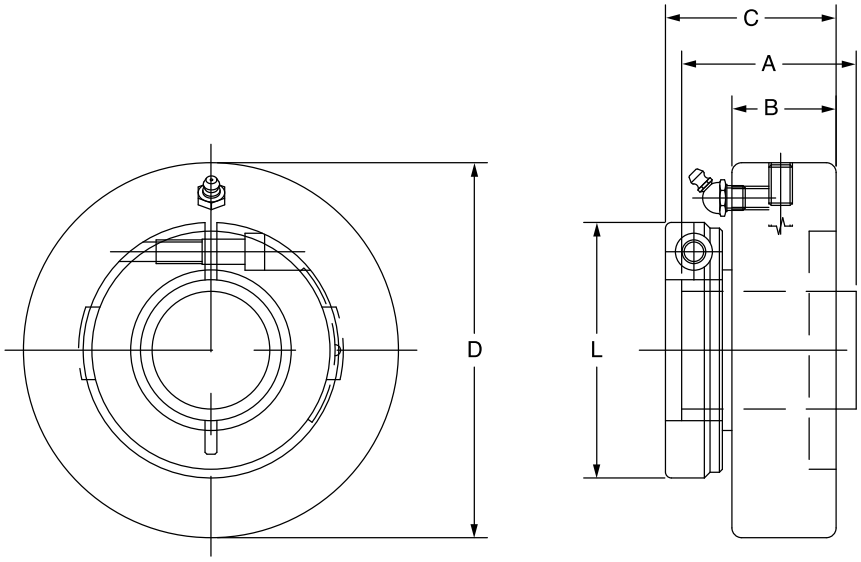

Series	Shaft Size	Part No.	Description
205	7/8	@	CYL-DL-014*
	15/16	@	CYL-DL-015*
	1	049430	CYL-DL-100*
206	1-1/8	059754	CYL-DL-102
	1-3/16	073332	CYL-DL-103
	1-1/4	@	CYL-DL-104S
	30mm	***056468***	*CYL-DL-30M*
207	1-1/4	@	CYL-DL-104
	1-3/8	@	CYL-DL-106
	1-7/16	***053045***	*CYL-DL-107*

* 45 degree lube fitting is used in place of standard

Series	Shaft Size	Weight lbs.	A	B	C	D	L
205	7/8	1.4	1.44	0.84	1.29	3.125/3.123	1.99
	15/16	1.3					
	1	1.2					
206	1-1/8	2.1	1.56	0.94	1.42	3.500/3.498	2.22
	1-3/16	2.0					
	1-1/4	1.9					
	30mm	*6.5*	*39.6*	*23.9*	*36.1*	*88.90/88.85*	*56.4*
207	1-1/4	2.8	1.75	1.06	1.58	3.875/3.873	2.69
	1-3/8	2.6					
	1-7/16	2.5					

To prevent the housing from rotating in the machine frame, tap a hole on the joint between the housing O.D. and the machine frame bore and lock with a setscrew

SELECTION/DIMENSIONS

DODGE®



D-LOK Ball Bearings
DL NORMAL DUTY BEARING INSERTS

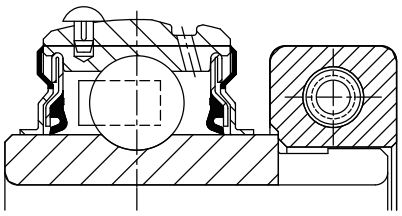

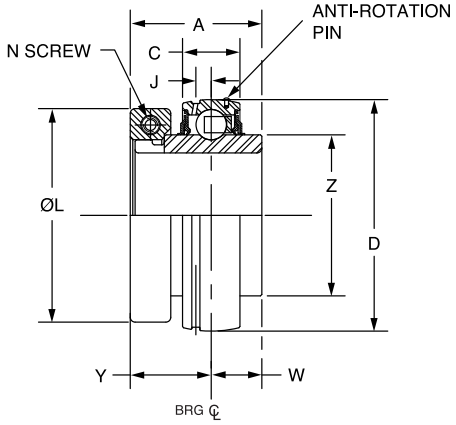

Series	Shaft Size	Standard Insert		Corrosion Resistant Insert	
		Part No.	Description	Part No.	Description
204	3/4	**128646**	INS-DL-012	**126685**	INS-DL-012-CR
	20mm	***126629***	*INS-DL-20M*	***126693***	*INS-DL-20M-CR*
205	7/8	**128684**	INS-DL-014	**@**	INS-DL-014-CR*
	15/16	**128647**	INS-DL-015	**@**	INS-DL-015-CR*
	1	**128648**	INS-DL-100	**126686**	INS-DL-100-CR
	25mm	***126630***	*INS-DL-25M*	***126694***	*INS-DL-25M-CR*
206	1-1/8	**128649**	INS-DL-102	**059869**	INS-DL-102-CR*
	1-3/16	**128650**	INS-DL-103	**126687**	INS-DL-103-CR
	1-1/4	**128651**	INS-DL-104S	**126688**	INS-DL-104S-CR
	30mm	***126631***	*INS-DL-30M*	***126695***	*INS-DL-30M-CR*
207	1-1/4	**128652**	INS-DL-104	**126689**	INS-DL-104-CR
	1-3/8	**128653**	INS-DL-106	**075728**	INS-DL-106-CR*
	1-7/16	**128654**	INS-DL-107	**052093**	INS-DL-107-CR
	35mm	***126632***	*INS-DL-35M*	***126696***	*INS-DL-35M-CR*
208	1-1/2	**128655**	INS-DL-108	**126690**	INS-DL-108-CR
	40mm	***126633***	*INS-DL-40M*	***126697***	*INS-DL-40M-CR*
209	1-5/8	**128656**	INS-DL-110L	**@**	INS-DL-110L-CR*
	1-11/16	**128657**	INS-DL-111	**126691**	INS-DL-111-CR
	1-3/4	**128658**	INS-DL-112	**075524**	INS-DL-112-CR*
	45mm	***126634***	*INS-DL-45M*	***126698***	*INS-DL-45M-CR*
210	1-15/16	**128659**	INS-DL-115	**126692**	INS-DL-115-CR
	2	**128660**	INS-DL-200	**053986**	INS-DL-200-CR*
	50mm	***126635***	*INS-DL-50M*	***126699***	*INS-DL-50M-CR*
211	2	**128661**	INS-DLM-200	**@**	INS-DLM-200-CR*
	2-3/16	**128663**	INS-DL-203	**@**	INS-DL-203-CR*
	55mm	***126636***	*INS-DL-55M*	***@***	*INS-DL-55M-CR**
212	2-1/4	**128664**	INS-DLM-204	**@**	INS-DLM-204-CR*
	2-7/16	**128666**	INS-DL-207	**062176**	INS-DL-207-CR*
	60mm	***126637***	*INS-DL-60M*	***@***	*INS-DL-60M-CR**
214	2-1/2	**128677**	INS-DLM-208	**068008**	INS-DLM-208-CR*
	2-11/16	**128667**	INS-DL-211	**@**	INS-DL-211-CR*
	70mm	***126638***	*INS-DL-70M*	***@***	*INS-DL-70M-CR**
215	2-15/16	**068540**	INS-DL-215	**@**	INS-DL-215-CR*

@ Assembled to order

*** 20 piece minimum order**



D-LOK Ball Bearings
DL NORMAL DUTY BEARING INSERTS

Series	Shaft Size	Weight lbs. *kg*	A	C	D	J	L	N Screw (UNF)	W	Y	Z
204	3/4	0.6	1.28	0.58	1.8504	0.15	1.71	#8-32	0.50	0.78	1.12
	20mm	*0.3*	*32.5*	*14.7*	*47.000*	*3.8*	*43.4*	*M4x6*	*12.7*	*19.8*	*28.4*
205	7/8	0.8	1.44	0.59	2.0472	0.16	1.99	#10-32	0.56	0.88	1.32
	15/16	0.8									
	1	0.8									
	25mm	*0.4*	*36.6*	*15.0*	*51.999*	*4.1*	*50.5*	*M5x20*	*14.2*	*22.4*	*33.5*
206	1-1/8	1.2	1.56	0.69	2.4409	0.16	2.22	#10-32	0.58	0.98	1.57
	1-3/16	1.2									
	1-1/4	1.1									
	30mm	0.6	*39.6*	*17.5*	*61.999*	*4.1*	*56.4*	*M5x20*	*14.7*	*24.9*	*39.9*
207	1-1/4	1.8	1.75	0.75	2.8346	0.20	2.69	1/4-28	0.67	1.08	1.84
	1-3/8	1.8									
	1-7/16	1.7									
	35mm	*0.8*	*44.5*	*19.1*	*71.999*	*5.1*	*68.3*	*M6x20*	*17.0*	*27.4*	*46.7*
208	1-1/2	2.2	2.01	0.87	3.1496	0.22	2.74	1/4-28	0.75	1.26	2.05
	40mm	*1.0*	*51.1*	*22.1*	*80.000*	*5.6*	*69.6*	*M6x20*	*19.1*	*32.0*	*52.1*
209	1-5/8	2.5	2.01	0.87	3.3465	0.25	2.99	1/4-28	0.75	1.26	2.22
	1-11/16	2.5									
	1-3/4	2.5									
	45mm	*1.2*	*51.1*	*22.1*	*85.001*	*6.4*	*75.9*	*M6x20*	*19.1*	*32.0*	*56.4*
210	1-15/16	3.0	2.01	0.87	3.5433	0.25	3.24	1/4-28	0.75	1.26	2.43
	2	3.0									
	50mm	*1.4*	*51.1*	*22.1*	*90.000*	*6.4*	*82.3*	*M6x20*	*19.1*	*32.0*	*61.7*
211	2	3.6	2.25	0.87	3.5433	0.25	3.69	5/16-24	0.88	1.37	2.71
	2-3/16	3.4									
	55mm	*1.6*	*57.2*	*22.1*	*90.000*	*6.4*	*93.7*	*M8x20*	*22.4*	*34.8*	*68.8*
212	2-1/4	4.8	2.38	1.02	4.3307	0.25	4.11	5/16-24	0.90	1.48	2.97
	2-7/16	4.8									
	60mm	*2.2*	*60.5*	*25.9*	*110.000*	*6.4*	*104.4*	*M8x25*	*22.9*	*37.6*	*75.4*
214	2-1/2	5.4	2.60	1.10	4.9213	0.26	4.38	5/16-24	1.06	1.54	3.31
	2-11/16	5.0									
	70mm	*2.5*	*66.0*	*27.9*	*125.001*	*6.6*	*111.3*	*M8x25*	*26.9*	*39.1*	*84.1*
215	2-15/16	5.9	2.40	1.14	5.1181	0.28	4.69	5/16-24	0.82	1.58	3.62

SELECTION/DIMENSIONS

D-LOK Ball Bearings
DLH & DLH-E NON-EXPANSION & EXPANSION NORMAL DUTY BEARINGS INSERTS

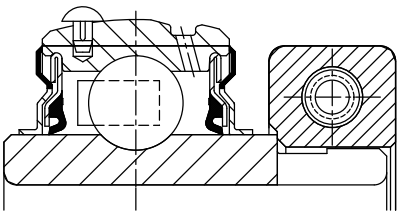

Non-Expansion

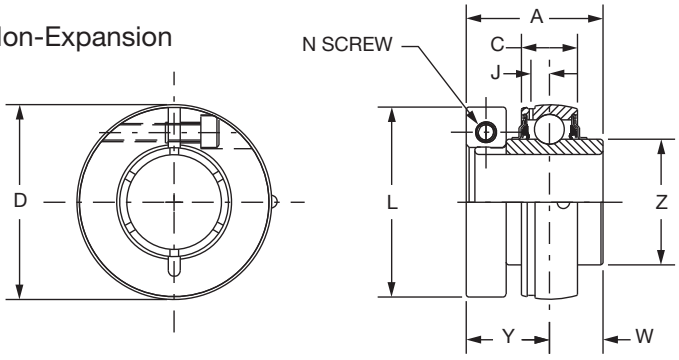

Expansion

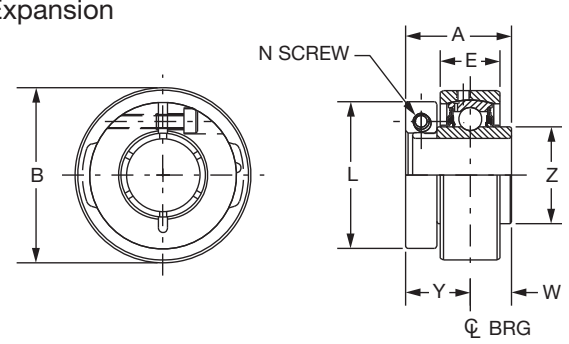

Series	Shaft Size	Expansion Insert		Non-Expansion Insert	
		Part No.	Description	Part No.	Description
206	1	@	INS-DLMH-100-E	@	INS-DLMH-100
	1-1/8	@	INS-DLH-102-E	@	INS-DLH-102
	1-3/16	**126485**	INS-DLH-103-E	**126480**	INS-DLH-103
	1-1/4	@	INS-DLH-104S-E	@	INS-DLH-104S
207	1-3/16	@	INS-DLMH-103-E	@	INS-DLMH-103
	1-1/4	@	INS-DLH-104-E	@	INS-DLH-104
	1-3/8	@	INS-DLH-106-E	@	INS-DLH-106
	1-7/16	**126486**	INS-DLH-107-E	**126481**	INS-DLH-107
210	1-11/16	@	INS-DLMH-111-E	@	INS-DLMH-111
	1-3/4	@	INS-DLMH-112-E	@	INS-DLMH-112
	1-15/16	**126487**	INS-DLH-115-E	**126482**	INS-DLH-115
	2	@	INS-DLH-200-E	@	INS-DLH-200
211	1-15/16	@	INS-DLMH-115-E	@	INS-DLMH-115
	2	@	INS-DLMH-200-E	@	INS-DLMH-200
	2-3/16	**126488**	INS-DLH-203-E	**126483**	INS-DLH-203
212	2-3/16	@	INS-DLMH-203-E	@	INS-DLMH-203
	2-1/4	@	INS-DLMH-204-E	@	INS-DLMH-204
	2-7/16	**126489**	INS-DLH-207-E	**126484**	INS-DLH-207

@ Assembled to order



D-LOK Ball Bearings

DLH & DLH-E NON-EXPANSION & EXPANSION NORMAL DUTY BEARINGS INSERTS

Series	Shaft Size	Weight Expansion lbs.	Weight Non-Exp. lbs.	A	B	C	D	E	J	L	N Screw (UNF)	W	Y	Z
206	1 1-1/8 1-3/16 1-1/4	1.9	1.2	1.56	2.875	0.69	2.4409	0.94	0.16	2.22	#10-32	0.58	0.98	1.57
207	1-3/16 1-1/4 1-3/8 1-7/16	2.6	1.8	1.75	3.272	0.75	2.8346	1.00	0.20	2.69	1/4-28	0.67	1.08	1.84
210	1-11/16 1-3/4 1-15/16 2	4.5	3.0	2.01	4.000	0.87	3.5433	1.36	0.25	3.24	1/4-28	0.75	1.26	2.43
211	1-15/16 2 2-3/16	5.3	3.4	2.25	4.475	0.94	3.9370	1.38	0.25	3.69	5/16-24	0.88	1.37	2.71
212	2-3/16 2-1/4 2-7/16	7.4	4.8	2.38	5.035	1.02	4.3307	1.55	0.25	4.11	5/16-24	0.90	1.48	2.97

SELECTION/DIMENSIONS

D-LOK Ball Bearings
DLM NORMAL DUTY BEARINGS INSERTS

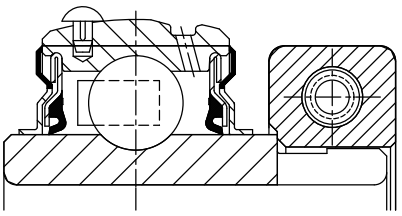

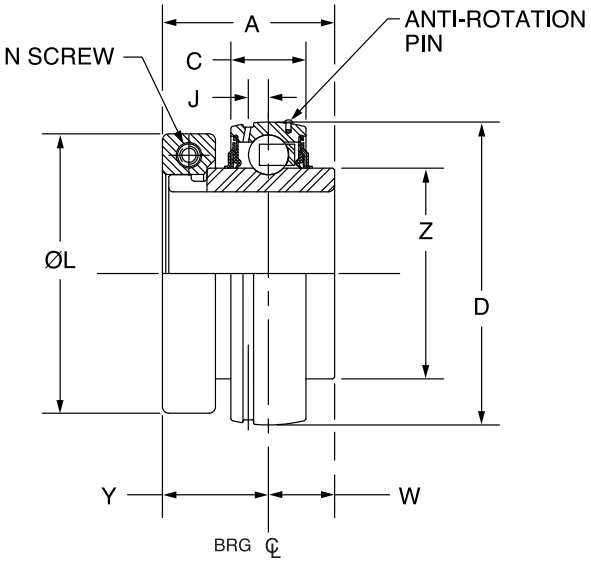

Series	Shaft Size	Standard Insert	
		Part No.	Description
206	1	**128668**	INS-DLM-100
207	1-3/16	**128669**	INS-DLM-103
	1-1/4	**128652**	INS-DL-104
208	1-7/16	**128670**	INS-DLM-107
	1-1/2 *	**128665**	INS-DL-108
	35mm	***126644***	*INS-DLM-35M*
209	1-1/2	**128671**	INS-DLM-108
	1-5/8	**128656**	INS-DL-110L
210	1-11/16	**128672**	INS-DLM-111
	1-3/4	**128673**	INS-DLM-112
211	1-15/16	**128674**	INS-DLM-115
	2	**128661**	INS-DLM-200
212	2-3/16	**128675**	INS-DLM-203
	2-1/4	**128664**	INS-DLM-204
214	2-7/16	**128676**	INS-DLM-207
	2-1/2	**128677**	INS-DLM-208
	65mm	***126645***	*INS-DLM-65M*
215	2.6875	**065551**	INS-DLM-211
216	2-15/16	**@**	INS-DLM-215
218	3-7/16	**064535**	INS-DLM-307

@ Assembled to order

* Piloted flange only



D-LOK Ball Bearings
DLM NORMAL DUTY BEARINGS INSERTS

Series	Shaft Size	Weight lbs. kg	A	C	D	J	L	N Screw (UNF)	W	Y	Z
206	1	1.8	1.56 39.6	0.69 17.5	2.4409 62.000	0.16 4.1	2.22 56.4	#10-32 M5x20	0.58 14.7	0.98 24.9	1.57 39.9
207	1-3/16 1-1/4	2.2 1.7	1.75 44.5	0.75 19.1	2.8346 72.000	0.20 5.1	2.69 68.3	1/4-28 M6x20	0.67 17.0	1.08 27.4	1.84 46.7
208	1-7/16 1-1/2 *35mm*	2.5 2.2 *1.0*	2.01 *51.1*	0.87 *22.1*	3.1496 *80.000*	0.22 *5.6*	2.74 *69.6*	1/4-28 *M6x20*	0.75 *19.1*	1.26 *32.0*	2.05 *52.1*
209	1-1/2 1-5/8	3.0 2.5	2.01 51.1	0.87 22.1	3.3465 85.000	0.25 6.4	2.99 75.9	1/4-28 M6x20	0.75 19.1	1.26 32.0	2.22 56.4
210	1-11/16 1-3/4	3.0 3.0	2.01 51.1	0.87 22.1	3.5433 90.000	0.25 6.4	3.24 82.3	1/4-28 M6x20	0.75 19.1	1.26 32.0	2.43 61.7
211	1-15/16 2	3.4 3.3	2.25 57.2	0.94 23.9	3.9370 100.000	0.25 6.4	3.69 93.7	5/16-24 M8x20	0.88 22.4	1.37 34.8	2.71 68.8
212	2-3/16 2-1/4	4.9 4.8	2.38 60.5	1.02 25.9	4.3307 110.000	0.25 6.4	4.11 104.4	5/16-24 M8x25	0.90 22.9	1.48 37.6	2.97 75.4
214	2-7/16 2-1/2 *65mm*	5.5 5.4 *2.5*	2.60 *66.0*	1.10 *27.9*	4.9213 *125.000*	0.26 *6.6*	4.38 *111.3*	5/16-24 *M8x25*	1.06 *26.9*	1.54 *39.1*	3.31 *84.1*
215	2-11/16	5.9	2.40	1.14	5.1181	0.28	4.69	5/16-24	0.82	1.58	3.62
216	2-15/16	6.9	2.62	1.18	5.5118	0.29	4.99	3/8-24	0.88	1.74	3.83
218	3-7/16	8.8	2.72	1.34	6.2992	0.30	5.49	3/8-24	0.92	1.80	4.35

FEATURES/BENEFITS PAGE B6-3	HOW TO ORDER/NOMENCLATURE PAGE B6-5	SELECTION/DIMENSIONS PAGE B6-10	ACCESSORIES PAGE B6-62

SELECTION/DIMENSIONS

D-LOK Ball Bearings
CC BALL BEARING FAN AND BLOWER INSERTS

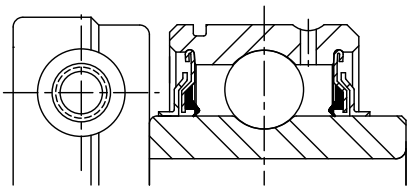

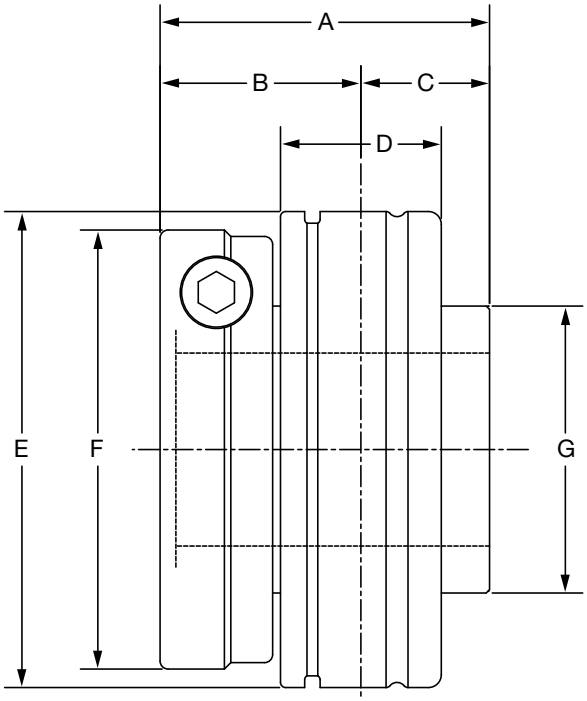

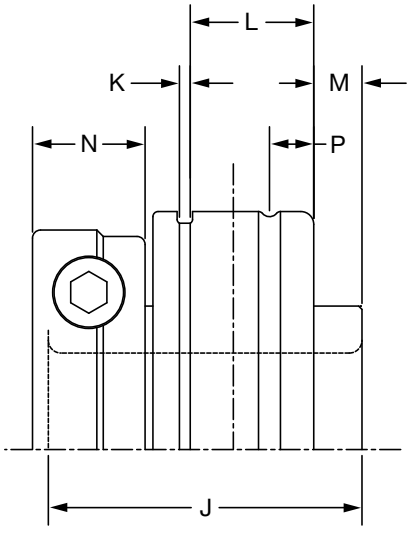

Series	Shaft Size	Part No.	Description
205	15/16	**128380**	INS-F&B-CC-015-DL
	1	**128381**	INS-F&B-CC-100-DL
206	1-1/8	**128382**	INS-F&B-CC-102-DL
	1-3/16	**128383**	INS-F&B-CC-103-DL
207	1-1/4	**128384**	INS-F&B-CC-104-DL
	1-3/8	**128385**	INS-F&B-CC-106-DL
	1-7/16	**128386**	INS-F&B-CC-107-DL
209	1-11/16	**128387**	INS-F&B-CC-111-DL
	1-3/4	**128388**	INS-F&B-CC-112-DL
210	1-15/16	**128389**	INS-F&B-CC-115-DL
211	2-3/16	**128390**	INS-F&B-CC-203-DL
212	2-7/16	**128391**	INS-F&B-CC-204-DL



D-LOK Ball Bearings
CC BALL BEARING FAN AND BLOWER INSERTS

Series	Shaft Size	Weight lbs kg	A	B	C	D	E	F	G	J	K	L	M	N	P	SCREW
205	15/16 1	16.000 16.050	1.44	0.88	0.56	0.75	2.0472	1.99	1.32	1.34	0.05	0.56	0.18	0.50	0.15	#10-32
206	1-1/8 1-3/16	16.080 16.240	1.56	0.98	0.58	0.83	2.4409	2.22	1.57	1.52	0.07	0.68	0.19	0.50	0.22	#10-32
207	1-1/4 1-3/8 1-7/16	32.710 32.510 34.260	1.75	1.08	0.67	0.92	2.8346	2.69	1.84	1.71	0.07	0.74	0.22	0.60	0.22	1/4-28
209	1-11/16 1-3/4	31.800 31.870	2.01	1.26	0.75	1.09	3.3465	2.99	2.22	1.94	0.07	0.90	0.20	0.60	0.25	1/4-28
210	1-15/16	51.350	2.01	1.26	0.75	1.13	3.5433	3.24	2.43	1.94	0.10	0.80	0.19	0.60	0.20	1/4-28
211	2-3/16	51.130	2.25	1.37	0.88	1.19	3.9370	3.69	2.71	2.22	0.10	0.96	0.28	0.73	0.30	5/16-24
212	2-7/16	55.000	2.38	1.48	0.90	1.25	4.3307	4.11	2.97	2.31	0.10	1.02	0.27	0.73	0.30	5/16-24

The insert is relubricated through the back seal area of the bearing.

FEATURES/BENEFITS PAGE B6-3	HOW TO ORDER/NOMENCLATURE PAGE B6-5	SELECTION/DIMENSIONS PAGE B6-10	ACCESSORIES PAGE B6-62

MODIFICATIONS ACCESSORIES



D-LOK Ball Bearings

LUBRICANTS
DODGE ball bearings are factory lubricated with a lithium complex based lubricant. For applications where extreme ambient temperatures or speeds are anticipated or environmental considerations require a different lubricant, DODGE has a variety of lubricants available. Special lubricant options usually require set-up charges and premiums.

SEALS
The PROGUARD PLUS seal is a highly effective positive contact land riding seal with flingers pressed on to each side of the inner ring offering added protection from high pressure wash down or extreme contamination. For high speeds or where seal drag would be an impediment, a labyrinth seal is available.

HIGH TEMPERATURE
DODGE high temperature bearings are designed to operate in temperatures from 225ºF (108ºC) to 400ºF (205ºC). The bearings have adjusted internal clearances, labyrinth seals, retainers, and lubricants to meet the temperature needs of the application. To insure proper replacement, the bearing is identified by a six digit part number etched on a stainless steel nameplate riveted to the housing. The part number identifies the specific feature of the bearing. High temperature bearings are factory assembled to order and are available at extra cost. Consult Dodge Engineering for application assistance at (864) 284-5700 or fax (864) 281-2317.

AIR HANDLING
Industrial fans and blowers generally operate at high speeds with bearing requirements of long life and quiet operation. Dodge stocks DL and DLM air handling pillow blocks that are specifically designed to meet the requirements of the Air Handling Industry. Other sizes and housing configurations can be supplied on a made/ assembled to order basis. These bearings are 100% inspected for quiet operation and are recommended for fan and blower operations.

COATINGS
For extra corrosion resistance, a variety of housings are available. Including stainless steel or polymer housed. These conform to U.S.D.A. and F.D.A. requirements. DL and DLM inserts can be supplied with a corrosion resistant finish to the inner and outer rings, stainless steel balls and set-screws, nickel plated flingers as well as F.D.A. lubricant.

OTHER MODIFICATIONS
For applications requiring modifications not listed, we encourage you to contact our Customer Order Engineering Department at (864) 284-5700 or fax (864) 281-2317.

DODGE Ball Bearing End Covers*

- Fits all styles of DODGE cast iron housed ball bearings: Pillow Blocks, 2 and 4 Bolt Flanges, and Take-Up bearings
- Injected molded, impact resistant, OSHA safety yellow end covers meet requirements for exposed rotating shafts
- Stainless steel “C” Washer for gripping power
- No modification or machining of existing housings required
- Concentric knockout grooves on inside of end cover for thru-shaft
- DODGE six digit part number and description embossed inside
- Operating temperature to 250°F
- For non relubricable/sealed for life applications (-NL), part number 430020 hex head plug is available

DODGE®



D-LOK Ball Bearings
END CLOSURES

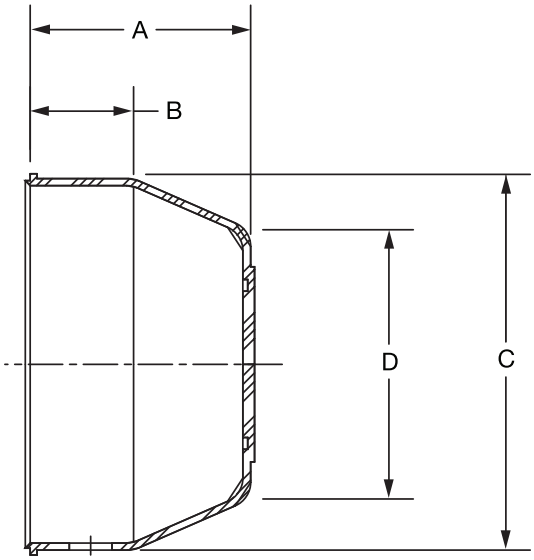

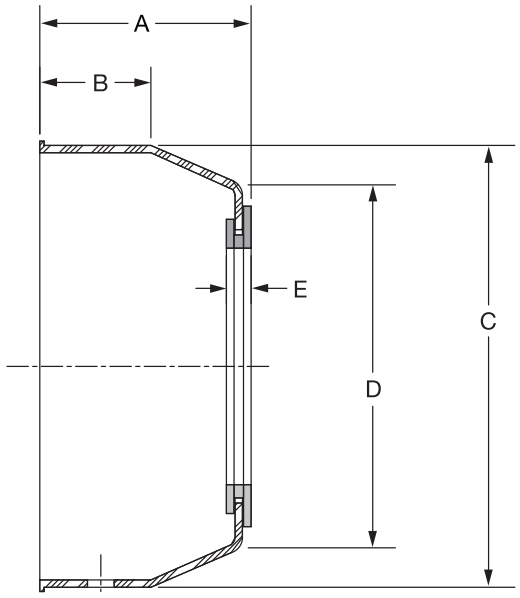

Series	Closed End Closure	
	Part Number	Description
204	**128280**	EC-204-Y
205	**128281**	EC-205-Y
206	**128282**	EC-206-Y
207	**128283**	EC-207-Y
208	**128284**	EC-208-Y
209	**128285**	EC-209-Y
210	**128286**	EC-210-Y
211	**128277**	EC-211-Y
212	**128278**	EC-212-Y

Open End Closure		
Shaft Size	Part Number	Description
3/4	**128350**	ECO-012-Y
20mm	**128363**	ECO-20M-Y
1	**128351**	ECO-100-Y
25mm	**128364**	ECO-25M-Y
1-3/16	**128352**	ECO-103-Y
1-1/4	**128353**	ECO-104S-Y
30mm	**128365**	ECO-30M-Y
1-1/4	**128355**	ECO-104-Y
1-7/16	**128354**	ECO-107-Y
35mm	**128366**	ECO-35M-Y
1-1/2	**128356**	ECO-108-Y
40mm	**128367**	ECO-40M-Y
1-11/16	**128357**	ECO-111-Y
45mm	**128368**	ECO-45M-Y
1-15/16	**128358**	ECO-115-Y
50mm	**128369**	ECO-50M-Y

MODIFICATIONS ACCESSORIES

DODGE®



D-LOK Ball Bearings

Open Cover D-LOK Dimensions

Series	Shaft Size	A	B	C	D	E
204	3/4 *20mm*	1-3/16 *30.2*	17/32 *13.5*	1-29/32 *48.4*	1-3/8 *35.1*	3/16 *4.9*
205	1 *25mm*	1-1/4 *31.8*	17/32 *13.5*	2-11/64 *55.1*	1-39/64 *40.9*	3/16 *4.9*
206	1-3/16 1-1/4 *30mm*	1-25/64 *35.3*	9/16 *14.2*	2-1/2 *63.5*	31/32 *50.0*	3/16 *4.9*
207	1-1/4 1-7/16 *35mm*	1-17/32 *38.9*	11/16 *17.5*	2-29/32 *73.9*	2-5/16 *58.9*	3/16 *4.9*
208	1-1/2 *40mm*	1-19/32 *40.6*	11/16 *17.5*	3-5/16 *84.1*	2-49/64 *70.1*	13/64 *5.1*
209	1-11/16 *45mm*	1-21/32 *41.9*	23/32 *18.3*	3-1/2 *88.9*	2-7/8 *72.9*	13/64 *5.1*
210	1-15/16 *50mm*	1-23/32 *43.7*	29/32 *23.1*	3-5/8 *91.4*	3 *76.2*	13/64 *5.1*

Closed Cover D-LOK Dimensions

Series	A	B	C	D
204	1.13 28.7	17/32 13.5	1-29/32 48.4	1-3/8 35.1
205	3/16 30.2	17/32 13.5	2-11/64 55.1	1-39/64 40.9
206	1-21/64 33.8	9/16 14.2	2-1/2 63.5	31/32 50.0
207	1-15/32 37.3	11/16 17.5	2-29/32 73.9	2-5/16 58.9
208	1-35/64 39.1	11/16 17.5	3-5/16 84.1	2-49/64 70.1
209	1-19/32 40.4	23/32 18.3	3-1/2 88.9	2-7/8 72.9
210	1-21/32 42.2	29/32 23.1	3-5/8 91.4	3 76.2
211	1-51/64 45.5	31/32 24.6	3-15/16 100.1	3-19/64 83.6
212	1-29/32 48.3	1 25.4	4-3/8 111.3	3-21/32 92.7

DODGE Ball Bearing End Covers*



- Fits all styles of DODGE cast iron housed ball bearings: Pillow Blocks, 2 and 4 Bolt Flanges, and Take-Up bearings
- Injected molded, impact resistant, OSHA safety yellow end covers meet requirements for exposed rotating shafts
- Stainless steel "C" Washer for gripping power
- No modification or machining of existing housings required
- Concentric knockout grooves on inside of end cover for thru-shaft
- DODGE six digit part number and description embossed inside
- Operating temperature to 250˚F
- For non relubricable/sealed for life applications (-NL), part number 430020 hex head plug is available

Nomenclature

EC - 205 - P

- EC: End Cover
- 205: ISO & ABMA ring size
- P: "Blank" fits all housing styles as noted; P - Pillow Blocks, including tapped base; X - all other housing styles as noted

Series	Pillow Blocks Std, U, B	Tapped Base PB	2 Bolt Flange	Flanged Bracket	4 Bolt Flange	Piloted Flange (FC)	Narrow Slot Take-Up	Wide Slot Take-Up
203	X		X		X			
204	X	X	X	X	X		X	X
205	X	X	X	X	X		X	X
206	X	X	X	X	X	@	X	X
207	X	X	X	X	X	@	X	X
208	X	X	X		X	@	X	X
209	X	X	X		X	@	X	X
210	X	X	X	X	X	@	X	X
211	X	X	X		X	NA	X	X
212	X		X		X	NA	X	X
214	X				X	NA		X
215	X				X			X
216	X				X	X		X
218	X				X	X		

* = Will not fit LF, LFT, SCHB, HNGR & CLY
@ = Some modification required
NA = Will not fit
X = Will fit

FEATURES/BENEFITS PAGE B6-3 | HOW TO ORDER/NOMENCLATURE PAGE B6-5 | SELECTION PAGE B6-6 | SELECTION/DIMENSIONS PAGE B6-10

RELATED PRODUCTS

D-LOK Ball Bearings

BALL BEARING END COVERS FOR PILLOW BLOCKS & TAPPED BASE UNITS

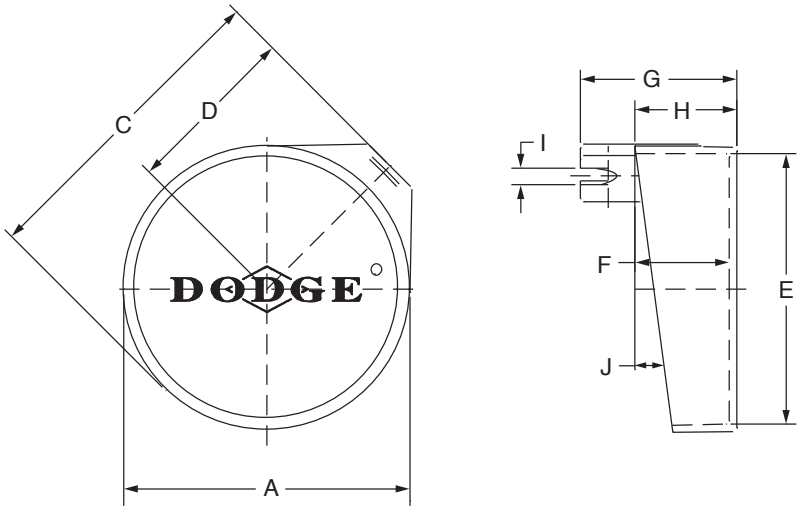

Series	Shaft Size*		Part Number	Description
	DL	DLM, DLH		
203	1/2 & 5/8 *17mm*	- - - - -	**128200**	EC-203-P
204	1/2 - 3/4 *20mm*	- - - - -	**128202**	EC-204-P
205	7/8 - 1 *25mm*	- - - - -	**128204**	EC-205-P
206	1-1/16 - 1-1/4 *30mm*	- - - - - *25mm*	**128206**	EC-206-P
207	1-1/4 - 1-7/16 *35mm*	1-3/16 & 1-1/4 *30mm*	**128208**	EC-207-P
208	1-1/2 - 1-5/8 *40mm*	1-7/16 *35mm*	**128210**	EC-208-P
209	1-5/8 - 1-3/4 *45mm*	1-1/2 *40mm*	**128212**	EC-209-P
210	1-15/16 & 2 *50mm*	1-11/16 & 1-3/4 *45mm*	**128214**	EC-210-P
211	2 - 2-1/4 *55mm*	1-15/16 & 2 *50mm*	**128216**	EC-211-P
212	2-1/4 - 2-7/16 *60mm*	2-3/16 - 2-1/4 *55mm*	**128218**	EC-212-P

* **NOTE:** DLH uses the next larger end cover. E.G. A P2B-DLH-103 would use a EC-207-P



D-LOK Ball Bearings
BALL BEARING END COVERS FOR PILLOW BLOCKS & TAPPED BASE UNITS

Series	Shaft Size		Weight lbs *gm*	A	C	D	E	F	G	H	I	J
	DL	DLM, DLH										
203	1/2 & 5/8 *17mm*	- - - - -	.02 *9*	1-25/32 *45.2*	2-7/64 *53.6*	1-3/32 *27.7*	1-41/64 *41.7*	49/64 *19.6*	1-29/64 *37.1*	29/32 *22.9*	1/4 *6.4*	9
204	1/2 - 3/4 *20mm*	- - - - -	.03 *14*	2-3/64 *52.0*	2-37/64 *65.3*	1-19/64 *33.0*	1-55/64 *47.2*	1-1/64 *25.7*	1-49/64 *45.0*	1-5/32 *29.5*	5/16 *7.9*	11
205	7/8 - 1 *25mm*	- - - - -	.05 *23*	2-3/8 *60.2*	2-13/16 *71.4*	1-3/16 *35.0*	2-5/32 *54.9*	1-1/16 *26.9*	1-7/8 *47.8*	1-7/32 *31.0*	11/32 *8.6*	9
206	1-1/16 - 1-1/4 *30mm*	- - - - - *25mm*	.07 *34*	2-47/64 *69.3*	3-21/64 *84.3*	1-45/64 *43.2*	2-1/2 *63.5*	1-15/64 *31.5*	2-5/32 *54.9*	1-13/32 *35.6*	23/64 *8.9*	9
207	1-1/4 - 1-7/16 *35mm*	1-3/16 & 1-1/4 *30mm*	.11 *48*	3-1/4 *82.6*	3-51/64 *96.3*	1-29/32 *48.5*	3-1/64 *76.7*	1-5/16 *33.3*	2-11/32 *59.4*	1-31/64 *37.6*	3/8 *9.4*	7 30
208	1-1/2 - 1-5/8 *40mm*	1-7/16 *35mm*	.13 *61*	3-3/8 *85.9*	4.0 *101.6*	2-1/16 *52.3*	3-7/64 *79.0*	1-19/64 *33.0*	2-13/32 *61.0*	1-1/2 *38.1*	27/64 *10.7*	6
209	1-5/8 - 1-3/4 *45mm*	1-1/2 *40mm*	.15 *69*	3-11/16 *93.7*	4-17/64 *108.2*	2-11/64 *55.1*	3-13/32 *86.6*	1-21/64 *33.8*	2-21/64 *59.2*	1-17/32 *38.9*	25/64 *9.9*	7
210	1-15/16 & 2 *50mm*	1-11/16 & 1-3/4 *45mm*	.17 *78*	3-7/8 *98.6*	4-1/2 *114.3*	2-19/32 *59.2*	3-37/64 *90.9*	1-23/64 *34.3*	2-1/2 *63.5*	1-9/16 *39.6*	31/64 *12.5*	9
211	2 - 2-1/4 *55mm*	1-15/16 & 2 *50mm*	.22 *102*	4-27/64 *112.3*	5-1/16 *128.5*	2-19/32 *66.0*	4-1/8 *104.7*	1-13/32 *35.8*	2-37/64 *65.3*	1-5/8 *41.2*	29/64 *11.4*	7
212	2-1/4 - 2-7/16 *60mm*	2-3/16 - 2-1/4 *55mm*	.26 *118*	4-59/64 *125.0*	5-29/64 *138.7*	2-3/4 *69.9*	4-39/64 *117.1*	1-17/32 *38.9*	2-11/16 *68.3*	1-3/4 *44.5*	13/32 *10.4*	8

For no re-lube (-NL) applications, part number 430020, hex head plug is available

RELATED PRODUCTS

D-LOK Ball Bearings

BALL BEARING END COVERS FOR MOUNTED UNITS OTHER THAN PILLOW BLOCKS & TAPPED BASE UNITS

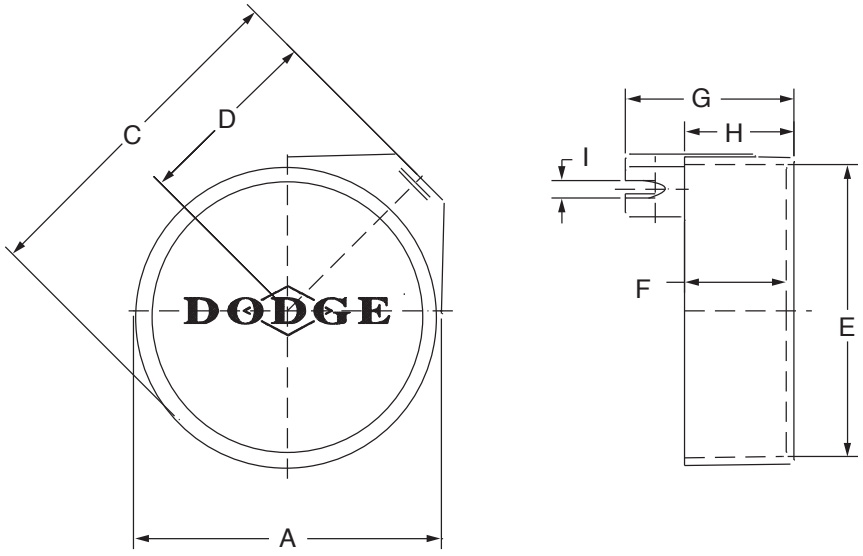

Series	Shaft Size*		Part Number	Description
	DL	DLM, DLH		
203	1/2 & 5/8 *17mm*	- - - - -	**128201**	EC-203-X
204	1/2 - 3/4 *20mm*	- - - - -	**128203**	EC-204-X
205	7/8 - 1 *25mm*	- - - - -	**128205**	EC-205-X
206	1-1/16 - 1-1/4 *30mm*	- - - - - *25mm*	**128207**	EC-206-X
207	1-1/4 - 1-7/16 *35mm*	1-3/16 & 1-1/4 *30mm*	**128209**	EC-207-X
208	1-1/2 - 1-5/8 *40mm*	1-7/16 *35mm*	**128211**	EC-208-X
209	1-5/8 - 1-3/4 *45mm*	1-1/2 *40mm*	**128213**	EC-209-X
210	1-15/16 & 2 *50mm*	1-11/16 & 1-3/4 *45mm*	**128215**	EC-210-X
211	2 - 2-1/4 *55mm*	1-15/16 & 2 *50mm*	**128217**	EC-211-X
212	2-1/4 - 2-7/16 *60mm*	2-3/16 - 2-1/4 *55mm*	**128219**	EC-212-X

* **NOTE:** Above end covers will not fit the LF and LFT bearings



D-LOK Ball Bearings

BALL BEARING END COVERS FOR MOUNTED UNITS OTHER THAN PILLOW BLOCKS & TAPPED BASE UNITS

Series	Shaft Size		Weight *lbs* *gm*	A	C	D	E	F	G	H	I
	DL	DLM, DLH									
203	1/2 & 5/8 *17mm*	- - - - -	0.02 *10*	1-51/64 *45.5*	2-13/64 *56.1*	1-3/16 *30.2*	1-41/64 *41.7*	51/64 *20.3*	1-29/64 *37.1*	15/16 *23.9*	1/4 *6.4*
204	1/2 - 3/4 *20mm*	- - - - -	0.03 *15*	2-7/32 *56.1*	2-47/64 *69.6*	1-25/64 *35.3*	2-1/32 *51.6*	1-1/64 *25.7*	1-13/16 *45.7*	1-5/32 *29.5*	5/16 *7.9*
205	7/8 - 1 *25mm*	- - - - -	0.05 *24*	2-3/8 *60.2*	3-3/64 *77.2*	1-19/32 *40.6*	2-5/32 *54.9*	1-1/64 *25.7*	1-53/64 *46.5*	1-11/64 *29.7*	11/32 *8.7*
206	1-1/16 - 1-1/4 *30mm*	- - - - - *25mm*	0.08 *36*	2-47/64 *69.3*	3-21/64 *84.3*	1-45/64 *43.2*	2-1/2 *63.5*	1-3/16 *30.2*	2-1/16 *52.3*	1-23/64 *34.5*	23/64 *8.9*
207	1-1/4 - 1-7/16 *35mm*	1-3/16 & 1-1/4 *30mm*	0.12 *53*	3-1/4 *82.6*	3-27/32 *97.5*	1-31/32 *50.0*	3-1/64 *76.7*	1-11/32 *34.5*	2-11/32 *59.4*	1-17/32 *38.9*	3/8 *9.4*
208	1-1/2 - 1-5/8 *40mm*	1-7/16 *35mm*	0.14 *64*	3-3/8 *85.9*	4.0 *101.6*	2-1/16 *52.3*	3-7/64 *79.0*	1-19/64 *33.0*	2-13/32 *61.0*	1-1/2 *38.1*	27/64 *10.7*
209	1-5/8 - 1-3/4 *45mm*	1-1/2 *40mm*	0.16 *73*	3-11/16 *93.7*	4-17/64 *108.2*	2-11/64 *55.1*	3-13/32 *86.6*	1-23/64 *34.3*	2-21/64 *59.2*	1-17/32 *38.9*	25/64 *9.9*
210	1-15/16 & 2 *50mm*	1-11/16 & 1-3/4 *45mm*	0.18 *82*	3-7/8 *98.6*	4-1/2 *114.3*	2-21/64 *59.2*	3-9/16 *90.9*	1-23/64 *34.3*	2-33/64 *63.8*	1-9/16 *39.6*	31/64 *12.4*
211	2 - 2-1/4 *55mm*	1-15/16 & 2 *50mm*	0.24 *108*	4-27/64 *112.3*	5-1/16 *128.5*	2-19/32 *66.0*	4-1/8 *104.7*	1-29/64 *36.8*	2-37/64 *65.3*	1-21/32 *42.2*	29/64 *11.4*
212	2-1/4 - 2-7/16 *60mm*	2-3/16 - 2-1/4 *55mm*	0.27 *124*	4-59/64 *125.0*	5-15/32 *138.7*	2-3/4 *69.9*	4-39/64 *117.1*	1-35/64 *39.1*	2-11/16 *68.3*	1-3/4 *44.5*	13/32 *10.4*

For no re-lube (_NL) applications, part number 430020, hex head plug is available

RELATED PRODUCTS



D-LOK Ball Bearings

BALL BEARING END COVERS FOR MOUNTED UNITS 214 SERIES & LARGER

Series	Shaft Size		Part Number	Description
	DL, DLH	DLM		
214	2-1/2 & 2-11/16 *70mm*	2-7/16 & 2-1/2 *65mm*	**128220**	EC-214
215	2-15/16 *75mm*	2-11/16 *70mm*	**128221**	EC-215
216	- - - - -	2-15/16 & 3 *75mm*	**128222**	EC-216
218	- - - - -	3-7/16 & 3-1/2 *85mm*	**128223**	EC-218

Series	Shaft Size		Weight lbs gm	A	B	C	D	E	F
	DL, DLH	DLM							
214	2-1/2 & 2-11/16 *70mm*	2-7/16 & 2-1/2 *65mm*	0.33 *151*	4-15/16 *125.5*	4-7/16 *112.8*	2-39/64 *66.3*	4-39/64 *117.1*	4.741/4.737 *120.4/120.3*	2-53/64 *71.9*
215	2-15/16 *75mm*	2-11/16 *70mm*	0.36 *154*	5-3/32 *129.3*	4-49/64 *120.9*	2-29/64 *62.5*	4-3/4 *120.7*	4.944/4.940 *125.6/125.5*	2-7/8 *72.9*
216	- - - - -	2-15/16 & 3 *75mm*	0.44 *201*	5-9/16 *141.2*	5-15/64 *132.8*	2-47/64 *69.6*	5-13/64 *132.1*	5.350/5.346 *135.9/135.8*	2-63/64 *75.7*
218	- - - - -	3-7/16 & 3-1/2 *85mm*	0.57 *257*	6-5/16 *130.3*	5-29/32 *149.9*	2-27/32 *72.1*	5-15/16 *150.6*	6.100/6.096 *154.9/154.8*	3-3/32 *78.5*

CONTENTS

Eccentric Collar Ball Bearings

Features / Benefits B7-3
How to Order / Nomenclature B7-5
Selection B7-6
Selection/Dimensions
- Pillow Blocks
  - SXR Normal Duty B7-12
- Flanges
  - 2-Bolt Flange B7-24
  - 4-Bolt Flange B7-28
  - Piloted Flange B7-30
- Take-Ups
  - SXR Normal Duty B7-32
  - SXR Normal Duty Hanger, Screw Conveyor Hanger & Cylindrical Units B7-38
- Inserts
  - SXR Normal Duty B7-40

Modification/Accessories B7-44
Related Products
- End Closures B7-47

Part Number Index INDEX-1
Key Word Index INDEX-69

CONTENTS





FEATURES/BENEFITS

Eccentric Collar Ball Bearings

For more than 70 years, DODGE® has been talking to mounted bearing users and listening to their needs. This experience led to design of the optimum mounted ball bearings.

The result is the DODGE SXR line, the most current eccentric collar mounted ball bearing design on the market, provides the user unmatched quality and true total value.

The DODGE eccentric ball bearing is manufactured at the state-of-the-art DODGE bearing plant in Rogersville, Tennessee - an ISO 9002 certified plant.

- Precision-hardened inner ring
- Normal-Duty Wide Inner Ring (SXR)
- Eccentric collar locking system
- DODGE DualGuard land-riding, positive contact seal
- Stronger, flexible ball cage
- Simplified anti-rotation device
- Wide variety of housing configurations
- Available in 1/2” to 2-15/16”, 17 to 75mm bore sizes
- SXR Seal options:
  - low torque labyrinth
- FDA/USDA lubricant and other special lubricants

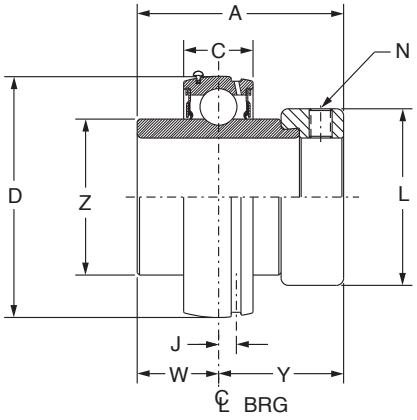

DODGE
Self-Locking Collar



The inner ring of the bearing is locked to the shaft by a quarter-turn of the eccentric collar in the direction of shaft rotation. The collar is secured in place with a single setscrew.

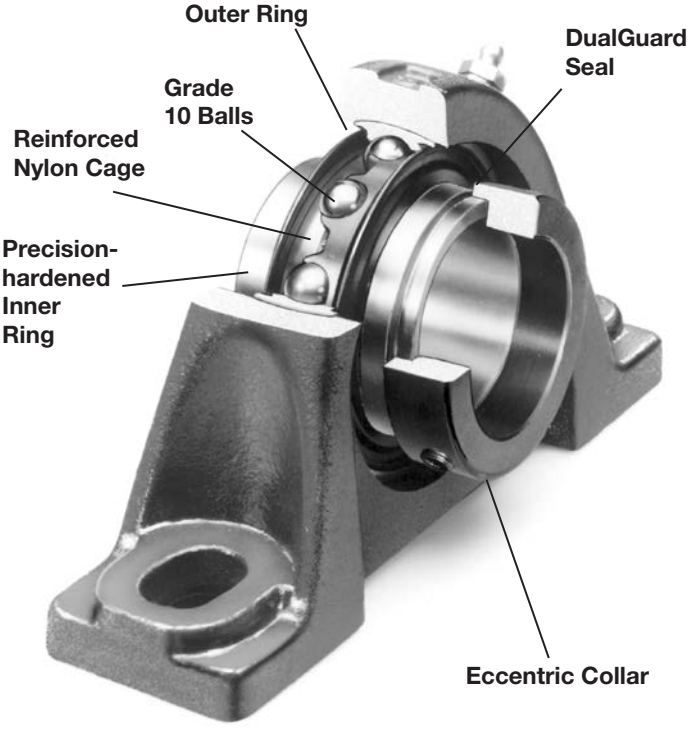

Pop-In End Covers

- Machined groove in housing accepts cover
- Secure fit to prevent spinning
- Keeps contaminants away from seal
- Creates safer work environment
- OSHA approved yellow
- Closed and open covers available
- Standard feature on PB, F2B, & F4B housing styles, 204-212 Series
- Press-In style for 214-218 Series
- Nomenclature
  - ECC-205-Y, Closed 205 Series
  - ECO-100Y, Open 1” Bore size



Note: Instruction manuals and drawings for Dodge bearings are available on www.dodge-pt.com

FEATURES/BENEFITS

Eccentric Collar Ball Bearings

DualGuard Seal

- Mechanically retained single lip seal for added strength
  - Purgeable design
  - Nitrile rubber lip
  - Keeps out contaminants
- Rubberized flinger
  - Dodge-only technology
  - Rubberized flinger provides external protection and discards contaminants as it rotates
  - Molded baffles in flinger act like a paddle wheel to help deflect liquids
  - Molded rubber increases the radius of the flinger which increases the acceleration rate of the contaminants as they are thrown away from the bearing
  - Rubber molding on the flinger is extended to the outer race of the bearing providing better protection than non-rubberized versions

Stronger Flexible Cage



The ball cage is made of heat-stabilized nylon with 33% fill short fiberglass reinforcement for added strength. The nylon material provides a natural lubricity for longer life. Fiberglass reinforcement allows higher operating temperatures than plain nylon, yet it is more resistant to fatigue than metallic cages.

Short fiberglass allows greater flexibility than steel or normal fiberglass, especially under misalignment. That means longer life in mounted bearings where some degree of misalignment is unavoidably encountered.

Anti-Rotation Pin

An anti-rotation pin prevents rotation of the outer race within the housing.

Simple and effective, it makes system inserts easier to replace. There is no need to remove and replace grease fittings, location pins or other devices.



Wide Variety Of Housing Configurations

DODGE provides a wide variety of durable eccentric mounted ball bearings. Housing configurations include:

- Pillow blocks (2-bolt and tapped base)
- Flange bearings (2- and 4-bolt)
- Hanger bearings
- Cylindrical units
- Take-up bearings
- Take-up frames

In Stock Near You

The complete line of DODGE mounted ball bearings is available at your local authorized DODGE distributor. For more information, check the yellow pages for your local distributor, call (864) 297-4800 or fax (864)-281-2318.

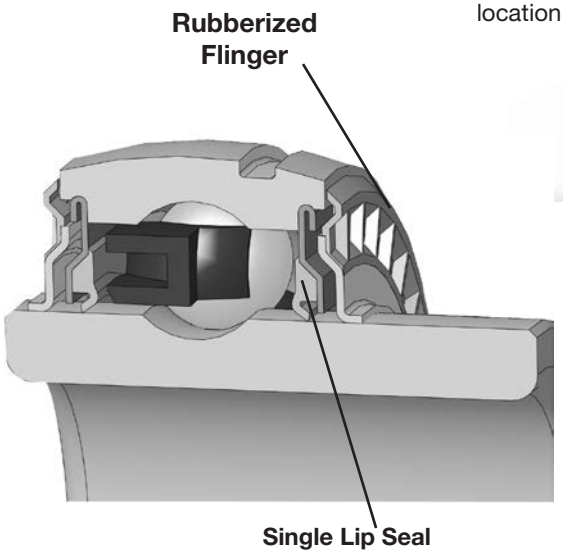

Note: Instruction manuals and drawings for Dodge bearings are available on www.dodge-pt.com



Eccentric Collar Ball Bearings

Nomenclature

P2B - SXR - 104 - NL

- **NL** — Modification or feature
  - E = Expansion
  - FF = DualGuard Plus seals (with Flingers)
  - HT = High Temperature option (400° F maximum)
  - LL = Low torque labyrinth seal
  - MOD = Modified
  - NL = No Lube (sealed for life)
  - RL = Relube (used with SLX flanges)
- **104** — Shaft size
  - Inches:
    - First digit = Number of inches
    - Second & third digits = Number of sixteenths of an inch
      - 104 = Indicates 1-4/16 or 1-1/4
    - S = Next smaller ring size. E.g. 1-1/4 206 would be written as 104S
    - L = Next larger ring size. E.g. 1/2 204 would be written as 008L
  - Metric:
    - First two digits = number of millimeters
    - M = Metric
- **SXR** — Bearing type:
  - SXR = Wide inner ring, normal duty, Eccentric locking Collar
  - Suffixes to the above:
    - B = Low backing height pillow block
    - H = High backing height (used with non-expansion and expansion units)
    - U = Higher back pillow block (for interchangeability with competitor pillow blocks)
- **P2B** — Housing:
  - CYL = Cylindrical Unit
  - F2B = 2 bolt flange
  - F2BZ = 2 bolt flange with pilot machined on the back side
  - F3B = 3 bolt flange
  - F4B = 4 bolt flange
  - FB = Flange bracket
  - FC = Flanged cartridge (piloted flange)
  - F&B = Fan and blower pillow block
  - HNG = Hanger bearing
  - LF = 3 bolt light duty flange
  - LFT = 2 bolt light duty flange
  - NSTU = Narrow slot take-up
  - P2B = 2 bolt base pillow block
  - SCHB = Screw conveyor hanger bearing
  - TB = Tapped base pillow block
  - TP = Top angle take-up
  - WSTU = Wide slot take-up

SELECTION

Eccentric Collar Ball Bearings

DODGE mounted ball bearings are primarily designed for radial loading. However, they have the capacity to carry thrust loads and combined radial/thrust loads. The maximum recommended load which can be applied is limited by various components in the system, such as bearing, housing, shaft attachments, speed and life requirements. DODGE mounted ball bearings have been applied successfully when these limits have been exceeded under controlled operating conditions. Contact DODGE Engineering for applications which exceed these recommendations.

Select a bearing from the Selection Chart that has a radial load rating at the operating speed equal to or greater than the calculated Equivalent Radial load for a desired L_{10} life. This simple method is all that is required for the majority of general applications and provides for occasional average shock loads.

L_{10} Hours Life-is the life which may be expected for at least 90% of a given group of bearings operating under identical conditions. For an L_{10} hours life other than those listed in the Selection Chart, multiply the equivalent Radial load by one of the following factors. For 50,000 L_{10} hours life, use a factor of 1.18 and for 80,000, use 1.39. Then select a bearing from the bold face (30,000) L_{10} ratings only in the Selection Chart that has a rating equal to or greater than this value.

Heavy Service-For heavy shock loads, frequent shock loads or severe vibrations, add up to 50% (according to severity of conditions) to the Equivalent Radial Load to obtain a Modified Equivalent Radial Load. Consult Application Engineering for additional selection assistance.

A thrust load value of C/10 is recommended as a guide for general applications and will give adequate L_{10} life. Where substantial radial load pulls the housing away from the mounting base, both the hold-down bolts and housing must be of adequate strength. Auxiliary load carrying devices, such as sheer bars, are advisable for side or end-loading of pillow blocks and radial loads for flange units.

To determine the L_{10} hours life for loads and RPM's not listed use the following equation:

$$L_{10} = \left(\frac{C}{P}\right)^3 \times \frac{16{,}667}{N}$$

Where:

L_{10} = Life, hours

C = Dynamic Capacity, lbs. or N

P = Equivalent Radial Load, lbs. or N

N = Revolutions per minute

When the load on a ball bearing is solely a radial load with no thrust (axial) load, the Equivalent Radial Load (P) is equal to the actual radial load. However, when a thrust (axial) load is applied, the radial and thrust loads applied must be converted into an Equivalent Radial Load. The use of the X (radial factor) and Y (thrust factor) from Table 1 convert the actual applied thrust and radial loads to an Equivalent Radial Load which has the same effect on the life of a bearing as a radial load of this magnitude.

$P = (X \times FR) + (Y \times FA)$

Where:

P = Equivalent Radial Load, lbs.
F_R = Radial load, lbs.
F_A = Thrust load, lbs.
e = Thrust load to radial load factor (Table 1)
X = Radial load factor (Table 1)
Y = Thrust factor (Table 1)
C_O = Basic static capacity

To find X and Y, first calculate F_A/C_O to determine e. Calculate F_A/F_R and compare to e to determine the X and Y factors to use from Table 1 .

Substitute all known values into the Equivalent Radial Load equation. The Equivalent Radial loads (P) thus determined can be used in the L_{10} life formula or compared to the allowable Equivalent Radial Load rating desired in the expanded rating chart to select a bearing (Table 2).

If calculated value of P is less than F_R, use $P=F_R$.

Table 1

F_A / Co	e	Radial/thrust Factors			
		If F_A/F_R is equal to or less than e		If F_A/F_R is greater than e	
		F_A/F_R < = e		F_A/F_R > e	
		X	Y	X	Y
0.014	0.19	1	0	0.56	2.30
0.021	0.21	1	0	0.56	2.15
0.028	0.22	1	0	0.56	1.99
0.042	0.24	1	0	0.56	1.85
0.056	0.26	1	0	0.56	1.71
0.070	0.27	1	0	0.56	1.63
0.084	0.28	1	0	0.56	1.55
0.110	0.30	1	0	0.56	1.45
0.170	0.34	1	0	0.56	1.31
0.280	0.38	1	0	0.56	1.15
0.420	0.42	1	0	0.56	1.04
0.560	0.44	1	0	0.56	1.00

Lubrication-DODGE Ball Bearings are lubricated at the factory and are ready to run. The bearings are initially lubricated with a lithium complex base grease and should be relubricated with the same or some equivalent. For high speeds, high loads, extreme temperatures and other abnormal operating conditions, special greases may be required. Contact DODGE Application Engineering for recommendations on these types of applications.

Misalignment-DODGE Ball Bearings are designed to allow a maximum of ±2° static misalignment. These bearings are not suitable for dynamic misalignment. To ensure good alignment, mounting surfaces must be checked for flatness and must lie in the same plane. When tightening base bolts, each bolt should be alternately tightened in incremental torque values until full torque is achieved to prevent the angular shifting of the pillow block that occurs when one bolt is tightened to its full torque. Shimming may be required to minimize misalignment.

Shaft Tolerances		
Normal Shaft Size Inches	**Commercial Shaft Tolerances Inches**	**Recommended Shaft Tolerances Eccentric Lock Ball Bearings Inches**
Up to 1-1/2	+0.000 -0.002	+0.0000 -0.0005
Over 1-1/2 to 2-1/2	+0.000 -0.003	+0.0000 -0.0010
Over 2-1/2 to 4	+0.000 -0.004	+0.0000 -0.0010

Note: Bearing analysis program "BEST" is available on www.ptwizard.com

DODGE®



Eccentric Collar Ball Bearings

Recommended Torque													
Setscrews					D-LOK			Mounting Bolts					
		◆ Recommended Torque						Metal Housings		EZ-KLEEN Housed Bearings			
Setscrew Size	Key Hex Across Flats	Standard Ball Bearing Insert		Corrosion Resistant Stainless Steel	Cap Screw Size	Recom. Torque	EZ-KLEEN Recom. Torque	Bolt Size	Recom. Dry Torque (Grade 2)	2-Bolt PB, 2 & 4 Bolt Fig. and Flg. Brackets		Tapped Base PB	
		Min	Max							Bolt Size	Torque ①	Bolt Size	Torque ②
(in.)	(in.)	(in-lbs.)	(in.-lbs.)	(in.-lbs.)	(in.)	(in.-lbs.)	(in.-lbs.)	(in.)	(in.-lbs.)	(in.)	(in.-lbs.)	(in.)	(in.lbs.)
#10	3/32	28	33	25	#8-32	58	46	3/8-16	240	3/8-16	225	3/8-16	175
1/4	1/8	66	80	60	#10-32	90	72	7/16-14	384	7/16-14	350	7/16-14	350
5/16	5/32	126	156	117	1/4-28	180	144	1/2-13	600	1/2-13	500	1/2-13	400
3/8	3/16	228	275	206	5/16-24	400	320	5/8-11	1200	9/16-12	650		
7/16	7/32	342	428	321	3/8-24	750	600	3/4-10	1950	5/8-11	1000		
								7/8-9	2890				
(mm)	(mm)	(N-m)	(N-m)	(N-m)	(mm)	(N-m)	(N-m)	(mm)	(N-m)	(mm)	(N-m)		
M5	2.5	3.2	3.7	2.8	M4	585	4.68	M10	29	M8	15	①Torque for Austenitic (18-8) Stainless	
M6	3	6.2	7.7	5.8	M5	10.75	8.6	M12	50	M10	25		
M8	4	14.2	17.8	13.4	M6	20.5	16.4	M16	124	M12	50	②Max. torque values published. Do not exceed	
M10	5	26	31	23	M8	45	36	M20	238	M14	75		
M12	6	46	57	43				M22	322	M18	125		

Lubrication

High Speed Operation - In the higher speed ranges, too much grease will cause over-heating. The amount of grease that the bearing will take for a particular high speed application can only be determined by experience. If excess grease in the bearing causes overheating, it will be necessary to remove grease fitting to permit excess grease to escape. The bearing has been greased at the factory and is ready to run. When establishing a relubrication schedule, note that a small amount of grease at frequent intervals is preferable to a large amount at infrequent intervals.

◆ **NOTE:** Dodge does not recommend the use of oils or locking agents on setscrew threads. However, if utilized, the the minimum installation torque values should be followed.

Lubrication Guide

Use a No. 2 Lithium complex base grease or equivalent*

Hours Run per Day	Suggested Lubrication Period in Weeks							
	1 to 250 RPM	251 to 500 RPM	501 to 750 RPM	751 to 1000 RPM	1001 to 1500 RPM	1501 to 2000 RPM	2001 to 2500 RPM	2501 to 3000 RPM
8	12	12	10	7	5	4	3	2
16	12	7	5	4	2	2	1	1
24	10	5	3	2	1	1	1	1

* For EZ-KLEEN series bearings, use an aluminum complex base grease.

Lubrication recommendations are intended for standard products applied in general operating conditions. For modified products, high temperature applications, and other anomalous applications contact product engineering at 864-284-5700.

Note: Bearing analysis program “BEST” is available on www.ptwizard.com

SELECTION

DODGE®



Eccentric Collar Ball Bearings - Inch

Table 2: Easy Selection Table For Ball Bearing Mounted Units

Ring Size	Shaft Size SXR,SXV, SLX	Dynamic Capacity C (Lbs)	Static Capacity Co (Lbs)	L_{10} Life, Hours	Allowable Equivalent Radial Load Rating (Lbs.) At Various RPM*							
					50	150	250	500	750	1000	1500	1750
203	1/2 5/8	2,158	1079	20,000	550	380	320	255	225	205	175	170
				30,000	480	335	280	225	195	175	155	145
				40,000	440	305	255	205	175	160	140	135
				60,000	380	265	225	175	155	140	125	115
				100,000	320	225	190	150	130	120	105	100
204	3/4	2,899	1482	20,000	740	515	435	345	300	275	240	225
				30,000	645	450	380	300	260	240	210	200
				40,000	590	410	345	275	240	215	190	180
				60,000	515	355	300	240	210	190	165	155
				100,000	435	300	255	200	175	160	140	130
205	7/8 15/16 1	3,146	1769	20,000	805	560	470	375	325	295	260	245
				30,000	705	485	410	325	285	260	225	215
				40,000	640	445	375	295	260	235	205	195
				60,000	560	385	325	260	225	205	180	170
				100,000	470	325	275	220	190	175	150	145
206	1-1/16 1-1/8 1-3/16 1-1/4	4,368	2538	20,000	1115	775	655	520	455	410	360	340
				30,000	975	675	570	455	395	360	315	300
				40,000	885	615	520	410	360	325	285	270
				60,000	775	535	455	360	315	285	250	235
				100,000	655	455	380	305	265	240	210	200
207	1-1/4 1-5/16 1-3/8 1-7/16	5,759	3461	20,000	1475	1020	860	685	595	545	475	450
				30,000	1285	890	755	595	520	475	415	395
				40,000	1170	810	685	545	475	430	375	355
				60,000	1020	710	595	475	415	375	330	310
				100,000	860	595	505	400	350	315	275	265
208	1-1/2	7,332	4475	20,000	1875	1300	1095	870	760	690	605	575
				30,000	1640	1135	960	760	665	605	525	500
				40,000	1490	1030	870	690	605	550	480	455
				60,000	1300	900	760	605	525	480	420	400
				100,000	1095	760	640	510	445	405	355	335
209	1-5/8 1-11/16 1-3/4	7,891	4906	20,000	2020	1400	1180	935	820	745	650	615
				30,000	1765	1225	1030	820	715	650	570	540
				40,000	1600	1110	935	745	650	590	515	490
				60,000	1400	970	820	650	570	515	450	430
				100,000	1180	820	690	550	480	435	380	360
210	1-15/16 2	7,891	5213	20,000	2020	1400	1180	935	820	745	650	615
				30,000	1765	1225	1030	820	715	650	570	540
				40,000	1600	1110	935	745	650	590	515	490
				60,000	1400	970	820	650	570	515	450	430
				100,000	1180	820	690	550	480	435	380	360
211	2-3/16	9,755	6588	20,000	2491	1727	1457	1156	1010	918	802	761
				30,000	2176	1509	1272	1010	882	802	700	665
				40,000	1977	1371	1156	918	802	728	636	604
				60,000	1727	1197	1010	802	700	636	556	528
				100,000	1457	1010	852	676	591	537	469	445
212	2-1/4 2-7/16	11,791	8100	20,000	3015	2090	1765	1400	1225	1110	970	925
				30,000	2635	1825	1540	1225	1070	970	880	805
				40,000	2395	1660	1400	1110	970	880	770	730
				60,000	2090	1450	1225	970	850	770	675	640
				100,000	1765	1225	1030	820	715	650	570	540
215	2-15/16	14,872	11108	20,000	3805	2640	225	1765	1545	1400	1225	1165
				30,000	3325	2305	1945	1545	1350	1225	1070	1015
				40,000	3020	2095	1765	1400	1225	1115	975	925
				60,000	2640	1830	1545	1225	1070	975	850	805
				100,000	2225	1545	1300	1035	905	820	715	680

* Slight interference fit required when operating in the shaded area

Note: Bearing analysis program “BEST” is available on www.ptwizard.com

DODGE®



Eccentric Collar Ball Bearings - Metric

Table 2 (Continued): Easy Selection Table for Ball Bearing Mounted Units

Ring Size	Shaft Size SXR,SXV, SLX	Dynamic Capacity C (Lbs)	Static Capacity Co (Lbs)	L_{10} Life, Hours	Allowable Equivalent Radial Load Rating (Lbs.) At Various RPM*									
					2000	2500	3000	3500	4000	4500	5000	5500	6500	7500
203	1/2 5/8	2,158	1079	20,000	160	150	140	135	130	125	120	115	110	105
				30,000	140	130	125	115	110	105	105	100	95	90
				40,000	130	120	110	105	100	95	95	90	85	80
				60,000	110	105	95	95	90	85	80	80	75	70
				100,000	95	85	80	80	75	70	70	65	65	60
204	3/4	2,899	1482	20,000	215	200	190	180	170	165	160	155	145	140
				30,000	190	175	165	155	150	145	140	135	130	120
				40,000	170	160	150	145	135	130	125	125	115	110
				60,000	150	140	130	125	120	115	110	105	100	95
				100,000	125	115	110	105	100	90	95	90	85	80
205	7/8 15/16 1	3,146	1769	20,000	235	220	205	195	185	180	175	170	160	150
				30,000	205	190	180	170	165	155	150	145	140	130
				40,000	185	175	165	155	150	140	135	135	125	120
				60,000	165	150	140	135	130	125	120	115	110	105
				100,000	135	125	120	115	110	105	100	100	95	90
206	1-1/16 1-1/8 1-3/16 1-1/4	4,368	2538	20,000	325	305	285	270	260	250	240	235	220	
				30,000	285	265	250	235	225	220	210	205	195	
				40,000	260	240	225	215	205	200	190	185	175	
				60,000	225	210	200	190	180	175	165	160	155	
				100,000	190	175	165	160	150	145	140	135	130	
207	1-1/4 1-5/16 1-3/8 1-7/16	5,759	3461	20,000	430	400	375	355	340	330	315	305		
				30,000	375	350	330	310	300	285	275	270		
				40,000	340	315	300	285	275	260	250	245		
				60,000	300	275	260	250	235	230	220	215		
				100,000	250	235	220	210	200	190	185	180		
208	1-1/2	7,332	4475	20,000	550	510	480	455	435	420	405			
				30,000	480	445	420	400	380	365	355			
				40,000	435	405	380	360	345	330	320			
				60,000	380	355	330	315	300	290	280			
				100,000	320	300	280	265	255	245	235			
209	1-5/8 1-11/16 1-3/4	7,891	4906	20,000	590	550	515	490	470	450	435			
				30,000	515	480	450	430	410	395	380			
				40,000	470	435	410	390	370	360	345			
				60,000	410	380	360	340	325	310	300			
				100,000	345	320	300	285	275	265	255			
210	1-15/16 2	7,891	5213	20,000	590	550	515	490	470	450				
				30,000	515	480	450	430	410	395				
				40,000	470	435	410	390	370	360				
				60,000	410	380	360	340	325	310				
				100,000	345	320	300	285	275	265				
211	2-3/16	9,755	6588	20,000	729	676	636	604	578					
				30,000	636	591	556	528	505					
				40,000	578	537	505	480	459					
				60,000	505	469	441	419	401					
				100,000	426	395	372	353	338					
212	2-1/4 2-7/16	11,791	8100	20,000	880	820	770	730						
				30,000	770	715	675	640						
				40,000	700	650	610	580						
				60,000	610	570	535	510						
				100,000	515	480	450	430						
215	2-15/16	14,872	11108	20,000	1115	1035	975							
				30,000	975	905	850							
				40,000	885	820	770							
				60,000	770	715	675							
				100,000	650	605	570							

* Slight interference fit required when operating to the right of the heavy line

Note: Bearing analysis program “BEST” is available on www.ptwizard.com

FEATURES/BENEFITS PAGE B7-3	HOW TO ORDER/NOMENCLATURE PAGE B7-5	SELECTION/DIMENSIONS PAGE B7-16	ACCESSORIES PAGE B7-48

SELECTION

DODGE®



Eccentric Collar Ball Bearings - Metric

Table 2 (Continued): Easy Selection Table for Ball Bearing Mounted Units

Ring Size	Shaft Size SXR,SXV, SLX	Dynamic Capacity C (N)	Static Capacity Co (N)	L_{10} Life, Hours	Allowable Equivalent Radial Load Rating (N) At Various RPM*							
					50	150	250	500	750	1000	1500	1750
203	17mm	9,600	4800	20,000	2446	1690	1423	1134	1001	912	778	758
				30,000	2135	1490	1245	1001	867	778	689	645
				40,000	1957	1357	1134	912	778	712	623	600
				60,000	1690	1179	1001	778	689	623	556	512
				100,000	1423	1001	845	667	578	534	467	445
204	20mm	12,895	6592	20,000	3292	2291	1835	1535	1334	1223	1068	1001
				30,000	2869	2002	1690	1334	1156	1068	934	890
				40,000	2624	1824	1535	1223	1068	956	845	801
				60,000	2291	1579	1334	1068	934	845	734	689
				100,000	1935	1334	1134	890	778	712	623	578
205	25mm	13.995	7869	20,000	3581	2491	2091	1668	1446	1312	1156	1090
				30,000	3136	2157	1824	1446	1268	1156	1001	956
				40,000	2847	1979	1668	1312	1156	1045	912	867
				60,000	2491	1712	1446	1156	1001	912	801	756
				100,000	2091	1446	1223	979	845	778	667	645
206	30mm	19,438	11,290	20,000	4960	3447	2913	1313	2024	1824	1601	1512
				30,000	4337	3002	2535	2024	1757	1601	1401	1334
				40,000	3936	2736	2313	1824	1601	1446	1268	1201
				60,000	3447	2380	2024	1601	1401	1268	1112	1045
				100,000	2913	2024	1690	1357	1179	1068	934	890
207	35mm	25,628	15,395	20,000	6561	4537	3825	3047	2647	2424	2113	2002
				30,000	5716	3959	3358	2647	2313	2113	1846	1757
				40,000	5204	3603	3047	2424	2113	1913	1668	1579
				60,000	4537	3158	2647	2113	1846	1668	1468	1379
				100,000	3825	2647	2246	1779	1557	1401	1223	1179
208	40mm	32,627	19,906	20,000	8340	5782	4871	3870	3380	3069	2691	2558
				30,000	7295	5048	4270	3380	2958	2691	2335	2224
				40,000	6628	4581	3870	3069	2691	2446	2135	2024
				60,000	5782	4003	3380	2691	2335	2135	1868	1779
				100,000	4871	3380	2847	2268	1979	1801	1579	1490
209	45mm	35,115	21,823	20,000	8985	6227	5249	4159	3647	3314	2891	2736
				30,000	7851	5449	4581	3647	3180	2891	2535	2402
				40,000	7117	4937	4159	3314	2891	2624	2291	2180
				60,000	6227	4315	3647	2891	2535	2291	2002	1913
				100,000	5249	3647	3069	2446	2135	1935	1690	1601
210	50mm	35,115	23,189	20,000	8985	6227	5249	4159	3647	3314	2891	2736
				30,000	7851	5449	4581	3647	3180	2891	2535	2402
				40,000	7177	4937	4159	3314	2891	2624	2291	2180
				60,000	6227	4315	3647	2891	2535	2291	2002	1913
				100,000	5249	3647	3069	2446	2135	1935	1690	1601
211	55mm	43,394	29,305	20,000	11079	7682	6479	5142	4492	4082	3566	3387
				30,000	9678	6711	5660	4492	3924	3566	3115	2959
				40,000	8793	6097	5142	4082	3566	3240	2830	2688
				60,000	7682	5326	4492	3566	3115	2830	2472	2348
				100,000	6479	4492	3789	3007	2627	2387	2085	1981
212	60mm	52,470	36,031	20,000	13411	9296	7851	6227	5449	4937	4315	4114
				30,000	11720	8118	6850	5449	4759	4315	3914	3481
				40,000	10653	7384	6227	4937	4315	3914	3425	3247
				60,000	9296	6450	5449	4315	3781	3425	3002	2847
				100,000	7851	5449	4581	3647	3180	2891	2535	2402
215	75mm	66,180	49,411	20,000	16925	11743	9897	7851	6872	6227	5449	5182
				30,000	14790	10253	8651	6872	6005	5449	4759	4515
				40,000	13433	9319	7851	6227	5449	4960	4337	4114
				60,000	11743	8140	6872	5449	4759	4337	3781	3581
				100,000	9897	6872	5782	4604	4025	3647	3180	3025

* Slight interference fit required when operating in the shaded area

Note: Bearing analysis program “BEST” is available on www.ptwizard.com

FEATURES/BENEFITS PAGE B7-3	HOW TO ORDER/NOMENCLATURE PAGE B7-5	SELECTION/DIMENSIONS PAGE B7-16	ACCESSORIES PAGE B7-48



Eccentric Collar Ball Bearings - Metric

Table 2 (Continued): Easy Selection Table for Ball Bearing Mounted Units

Ring Size	Shaft Size SXR,SXV, SLX	Dynamic Capacity C (N)	Static Capacity Co (N)	L_{10} Life, Hours	Allowable Equivalent Radial Load Rating (N) At Various RPM*									
					2000	2500	3000	3500	4000	4500	5000	5500	6500	7500
203	17mm	9,600	4800	20,000	0712	667	623	600	578	556	534	512	489	457
				30,000	623	578	556	512	489	467	467	445	423	400
				40,000	578	534	489	467	445	423	423	400	378	358
				60,000	489	467	423	423	400	378	356	356	334	311
				100,000	423	378	356	356	334	311	311	289	289	267
204	20mm	12,895	6592	20,000	956	890	845	801	756	734	712	689	645	623
				30,000	845	778	734	689	667	645	623	600	578	534
				40,000	756	712	667	645	600	578	556	556	512	489
				60,000	667	623	578	556	534	512	489	457	445	423
				100,000	556	512	489	467	445	400	423	400	378	356
205	25mm	13.995	7869	20,000	1045	979	912	867	823	801	778	756	712	667
				30,000	912	845	801	756	734	689	667	645	623	578
				40,000	823	778	734	689	667	623	600	600	556	534
				60,000	734	667	623	600	578	556	534	512	489	467
				100,000	600	556	534	512	489	467	445	445	423	400
206	30mm	19,438	11,290	20,000	1446	1357	1268	1201	1156	1112	1068	1045	979	
				30,000	1268	1179	1112	1045	1001	979	934	912	867	
				40,000	1156	1068	1001	956	912	890	845	823	778	
				60,000	1001	934	890	845	801	778	734	712	689	
				100,000	845	778	734	712	667	645	623	600	578	
207	35mm	25,628	15,395	20,000	1913	1779	1668	1579	1512	1468	1401	1357		
				30,000	1668	1557	1468	1379	1334	1268	1223	1201		
				40,000	1512	1401	1334	1268	1201	1156	1112	1090		
				60,000	1334	1223	1156	1112	1045	1023	979	956		
				100,000	1112	1045	979	934	890	845	823	801		
208	40mm	32,627	19,906	20,000	2446	2268	2135	2024	1935	1868	1801			
				30,000	2135	1979	1868	1779	1680	1624	1579			
				40,000	1935	1801	1690	1601	1535	1468	1423			
				60,000	1690	1579	1468	1401	1334	1290	1245			
				100,000	1423	1334	1245	1179	1134	1090	1045			
209	45mm	35,115	21,823	20,000	2624	2446	2291	2180	2091	2002	1935			
				30,000	2291	2135	2002	1913	1824	1757	1690			
				40,000	2091	1935	1824	1735	1646	1601	1535			
				60,000	1824	1690	1601	1512	1446	1379	1334			
				100,000	1535	1423	1334	1268	1223	1179	1134			
210	50mm	35,115	23,189	20,000	2624	2446	2291	2180	2091	2002				
				30,000	2291	2135	2002	1913	1824	1757				
				40,000	2091	1935	1824	1735	1646	1601				
				60,000	1824	1690	1601	1512	1446	1379				
				100,000	1535	1423	1334	1268	1223	1179				
211	55mm	43,394	29,305	20,000	3241	3007	2830	2688	2571					
				30,000	2831	2627	2472	2348	2246					
				40,000	2572	2387	2246	2134	2041					
				60,000	2247	2085	1962	1864	1783					
				100,000	1895	1759	1655	1572	1504					
212	60mm	52,470	36,031	20,000	3914	3647	3425	3247						
				30,000	3425	3180	3002	2847						
				40,000	3114	2891	2713	2580						
				60,000	2713	2535	2380	2268						
				100,000	2291	2135	2002	1913						
215	75mm	66,180	49,411	20,000	4960	4604	4337							
				30,000	4337	4025	3781							
				40,000	3936	3647	3425							
				60,000	3425	3180	3002							
				100,000	2891	2691	2535							

* Slight interference fit required when operating to the right of the heavy line

Note: Bearing analysis program “BEST” is available on www.ptwizard.com

FEATURES/BENEFITS PAGE B7-3	HOW TO ORDER/NOMENCLATURE PAGE B7-5	SELECTION/DIMENSIONS PAGE B7-16	ACCESSORIES PAGE B7-48

SELECTION/DIMENSIONS



Eccentric Collar Ball Bearings
SXR AND SXRU NORMAL DUTY PILLOW BLOCKS

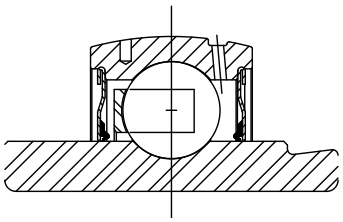

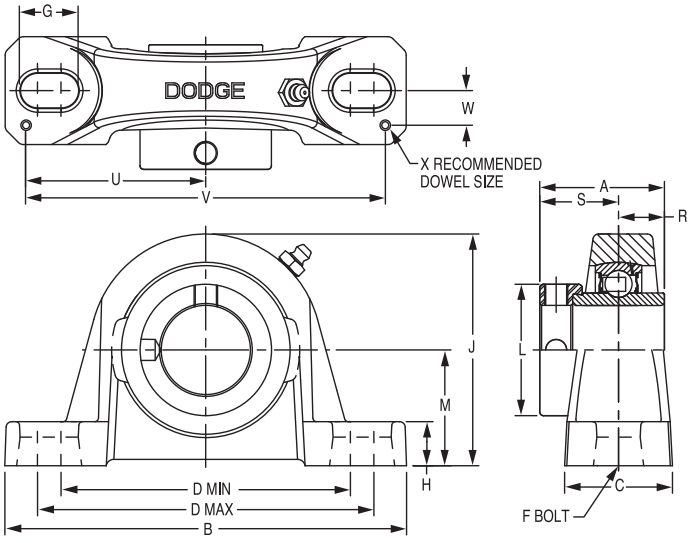

Series	Shaft Size	Standard		Sealed for Life	
		Part No.	Description	Part No.	Description
203	1/2	**131800**	P2B-SXR-008	@	P2B-SXR-008-NL
	5/8	**131801**	P2B-SXR-010	@	P2B-SXR-010-NL
	17mm	*@*	*P2B-SXR-17M*	@	*P2B-SXR-17M-NL*
203 (SXRU)	1/2	**131341**	P2B-SXRU-008	@	P2B-SXRU-008-NL
	5/8	**131342**	P2B-SXRU-010	@	P2B-SXRU-010-NL
	17mm	***125655***	*P2B-SXRU-17M*	@	*P2B-SXRU-17M-NL*
204	3/4	**131802**	P2B-SXR-012	@	P2B-SXR-012-NL
	20mm	***125656***	*P2B-SXR-20M*	@	*P2B-SXR-20M-NL*
205	7/8	**131803**	P2B-SXR-014	@	P2B-SXR-014-NL
	15/16	**131804**	P2B-SXR-015	@	P2B-SXR-015-NL
	1	**131805**	P2B-SXR-100	@	P2B-SXR-100-NL
	25mm	***125657***	*P2B-SXR-25M*	@	*P2B-SXR-25M-NL*
206	1-1/16	**131806**	P2B-SXR-101	@	P2B-SXR-101-NL
	1-1/8	**131807**	P2B-SXR-102	@	P2B-SXR-102-NL
	1-3/16	**131808**	P2B-SXR-103	@	P2B-SXR-103-NL
	1-1/4	**064230**	P2B-SXR-104S	@	P2B-SXR-104S-NL
	30mm	*@*	*P2B-SXR-30M*	@	*P2B-SXR-30M-NL*
206 (SXRU)	1-1/16	**131895**	P2B-SXRU-101	@	P2B-SXRU-101-NL
	1-1/8	**131896**	P2B-SXRU-102	@	P2B-SXRU-102-NL
	1-3/16	**131897**	P2B-SXRU-103	**064882**	P2B-SXRU-103-NL
	1-1/4	@	P2B-SXRU-104S	@	P2B-SXRU-104S-NL
	30mm	***125658***	*P2B-SXRU-30M*	@	*P2B-SXRU-30M-NL*
207	1-1/4	**131809**	P2B-SXR-104	**054950**	P2B-SXR-104-NL
	1-5/16	**131810**	P2B-SXR-105	@	P2B-SXR-105-NL
	1-3/8	**131811**	P2B-SXR-106	**065616**	P2B-SXR-106.NL
	1-7/16	**131812**	P2B-SXR-107	**059667**	P2B-SXR-107-NL
	35mm	***125659***	*P2B-SXR-35M*	@	*P2B-SXR-35M-NL*

@ Assembled to order

FEATURES/BENEFITS PAGE B7-3 | HOW TO ORDER/NOMENCLATURE PAGE B7-7 | EASY SELECTION PAGE B7-8 | ACCESSORIES PAGE B7-44

DODGE®



Eccentric Collar Ball Bearings
SXR AND SXRU NORMAL DUTY PILLOW BLOCK

Series	Shaft Size	Weight lbs / *kg*	A	B	C	D		F Bolt Dia.	G	H	J	L	M	R	S	U	V	W	X
						min.	max.												
203	1/2	1.2	1.47	5.00	1.20	3.25	4.06	3/8	0.84	0.47	2.14	1.13	1.06	0.55	0.92	2.25	4.50	0.38	0.12
	5/8	1.0																	
	17mm	*0.5*	*37.3*	*127.0*	*30.5*	*82.6*	*103.1*	*M10*	*21.3*	*11.9*	*54.4*	*28.7*	*27.0*	*14.0*	*23.4*	*57.2*	*114.3*	*9.7*	*3.0*
203 (SXRU)	1/2	1.2	1.47	5.00	1.20	3.25	4.06	3/8	0.84	0.59	2.27	1.13	1.19	0.55	0.92	2.25	4.50	0.38	0.12
	5/8																		
	17mm	*0.5*	*37.3*	*127.0*	*30.5*	*82.6*	*103.1*	*M10*	*21.3*	*15.0*	*57.7*	*28.7*	*30.2*	*14.0*	*23.4*	*57.2*	*114.3*	*9.7*	*3.0*
204	3/4	1.6	1.55	5.25	1.34	3.38	4.19	3/8	0.85	0.53	2.56	1.31	1.31	0.50	1.05	2.25	4.50	0.50	0.12
	20mm	*0.4*	*39.4*	*133.4*	*34.0*	*85.9*	*106.4*	*M10*	*21.6*	*13.5*	*65.0*	*33.3*	*33.3*	*12.7*	*26.7*	*57.2*	*114.3*	*12.7*	*3.0*
205	7/8	1.9	1.62	5.50	1.40	3.69	4.50	3/8	0.85	0.58	2.77	1.50	1.44	0.56	1.06	2.50	5.00	0.50	0.12
	15/16	1.8																	
	1	1.7																	
	25mm	*0.6*	*41.1*	*139.7*	*35.6*	*93.7*	*114.3*	*M10*	*21.6*	*14.7*	*70.4*	*38.1*	*36.5*	*14.2*	*26.9*	*63.5*	*127.0*	*12.7*	*3.0*
206	1-1/16	2.8	1.77	6.25	1.75	4.25	5.00	1/2	0.94	0.68	3.25	1.75	1.63	0.58	1.19	2.88	5.76	0.56	0.12
	1-1/8	2.7																	
	1-3/16	2.6																	
	1-1/4	2.5																	
	30mm	*1.1*	*45.0*	*158.8*	*44.5*	*108.0*	*127.0*	*M12*	*23.9*	*17.3*	*82.6*	*44.5*	*41.3*	*14.7*	*30.2*	*73.2*	*146.3*	*14.2*	*3.0*
206 (SXRU)	1-1/16	2.9	1.77	6.25	1.75	4.25	5.00	1/2	0.94	0.75	3.31	1.75	1.69	0.58	1.19	2.88	5.76	0.56	0.12
	1-1/8	2.8																	
	1-3/16	2.7																	
	1-1/4	2.6																	
	30mm	*1.2*	*45.0*	*158.8*	*44.5*	*108.0*	*127.0*	*M12*	*23.9*	*19.1*	*84.1*	*44.5*	*42.9*	*14.7*	*30.2*	*73.2*	*146.3*	*14.2*	*3.0*
207	1-1/4	4.6	1.95	6.50	1.75	4.68	5.44	1/2	0.94	0.71	3.75	2.13	1.88	0.67	1.28	2.91	5.82	0.56	0.12
	1-5/16	4.5																	
	1-3/8	4.4																	
	1-7/16	4.3																	
	35mm	*1.9*	*49.5*	*165.1*	*44.5*	*118.9*	*138.2*	*M12*	*23.9*	*18.0*	*95.3*	*54.1*	*47.6*	*17.0*	*32.5*	*73.9*	*147.8*	*14.2*	*3.0*

FEATURES/BENEFITS PAGE B7-3	HOW TO ORDER/NOMENCLATURE PAGE B7-7	EASY SELECTION PAGE B7-8	ACCESSORIES PAGE B7-44

SELECTION/DIMENSIONS

Eccentric Collar Ball Bearings
SXR AND SXRU NORMAL DUTY PILLOW BLOCK

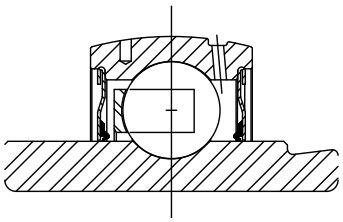

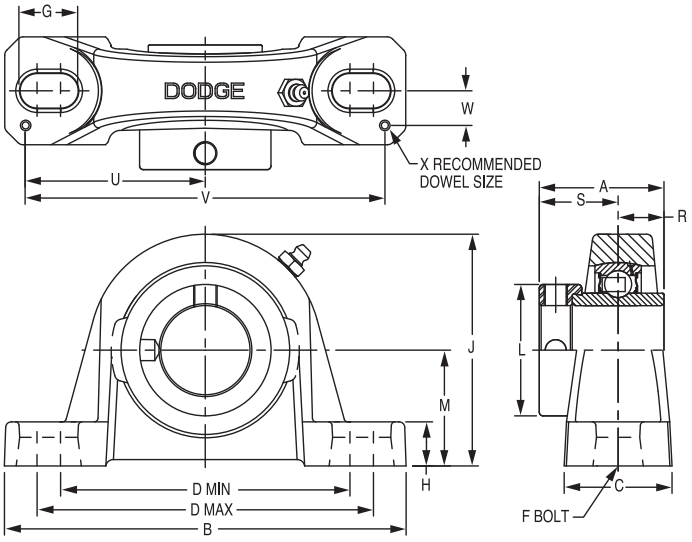

Series	Shaft Size	Standard		Sealed for Life	
		Part No.	Description	Part No.	Description
208	1-1/2	**131813**	P2B-SXR-108	**049841**	P2B-SXR-108-NL
	40mm	**@**	*P2B-SXR-40M*	**@**	*P2B-SXR-40M-NL*
209	1-5/8	**131814**	P2B-SXR-110	**@**	P2B-SXR-110-NL
	1-11/16	**131815**	P2B-SXR-111	**052762**	P2B-SXR-111-NL
	1-3/4	**131816**	P2B-SXR-112	**049848**	P2B-SXR-112-NL
	45mm	***125661***	*P2B-SXR-45M*	**@**	*P2B-SXR-45M-NL*
210	1-15/16	**131817**	P2B-SXR-115	**052763**	P2B-SXR-115-NL
	2	**131818**	P2B-SXR-200	**049843**	P2B-SXR-200-NL
	50mm	***125662***	*P2B-SXR-50M*	@	*P2B-SXR-50M-NL*
211	2	**131339**	P2B-SXR-200L	**@**	P2B-SXR-200L-NL
	2-3/16	**131819**	P2B-SXR-203	**@**	P2B-SXR-203-NL
	55mm	***125663***	*P2B-SXR-55M*	**@**	*P2B-SXR-55M-NL*
212	2-1/4	**131820**	P2B-SXR-204	**@**	P2B-SXR-204-NL
	2-7/16	**131821**	P2B-SXR-207	**049844**	P2B-SXR-207-NL
	60mm	***125664***	*P2B-SXR-60M*	**@**	*P2B-SXR-60M-NL*
215	2-15/16	**131432**	P2B-SXR-215	**@**	P2B-SXR-215-NL
	75mm	@	*P2B-SXR-75M*	@	*P2B-SXR-75M-NL*
215	2-15/16	**131433**	P2B-SXRU-215	**@**	P2B-SXRU-215-NL
(SXRU)	*75mm*	***125665***	*P2B-SXRU-75M*	**@**	*P2B-SXRU-75M-NL*

@ Assembled to order



Eccentric Collar Ball Bearings
SXR AND SXRU NORMAL DUTY PILLOW BLOCK

Series	Shaft Size	Weight lbs *kg*	A	B	C	D min.	D max.	F Bolt Dia.	G	H	J	L	M	R	S	U	V	W	X
208	1-1/2	5.3	2.12	7.25	1.93	5.18	5.88	1/2	0.91	0.93	4.19	2.38	2.13	0.75	1.37	3.26	6.52	0.69	0.12
	40mm	*2.4*	*53.8*	*184.2*	*49.0*	*131.6*	*149.4*	*M12*	*23.1*	*23.6*	*106.4*	*60.5*	*54.0*	*19.1*	*34.8*	*82.8*	*165.6*	*17.5*	*3.0*
209	1-5/8	6.6	2.13	7.44	2.00	5.50	6.19	1/2	0.90	0.75	4.28	2.50	2.13	0.75	1.38	3.38	6.76	0.69	0.12
	1-11/16	6.5																	
	1-3/4	6.4																	
	45mm	*2.8*	*54.1*	*189.0*	*50.8*	*139.7*	*157.2*	*M12*	*22.9*	*19.1*	*108.7*	*63.5*	*54.0*	*19.1*	*35.1*	*85.9*	*171.7*	*17.5*	*3.0*
210	1-15/16	7.4	2.25	8.12	2.25	6.00	6.68	5/8	1.02	0.75	4.53	2.75	2.25	0.75	1.50	3.69	7.38	0.81	0.12
	2	7.2																	
	50mm	*3.2*	*57.2*	*206.2*	*57.2*	*152.4*	*169.7*	*M16*	*25.9*	*19.1*	*115.1*	*69.9*	*57.2*	*19.1*	*38.1*	*93.7*	*187.5*	*20.6*	*3.0*
211	2	9.8	2.59	8.88	2.30	6.38	7.44	5/8	1.21	0.88	4.96	3.00	2.50	0.88	1.71	3.94	7.88	0.81	0.12
	2-3/16	9.3																	
	55mm	*4.1*	*65.8*	*225.6*	*58.4*	*162.1*	*188.98*	*M16*	*30.7*	*22.4*	*126.0*	*76.2*	*63.5*	*22.4*	*43.4*	*100.1*	*200.2*	*20.6*	*3.0*
212	2-1/4	11.6	2.74	9.50	2.37	6.88	7.94	5/8	1.21	0.88	5.40	3.31	2.75	0.90	1.84	4.25	8.50	0.88	0.12
	2-7/16	11.0																	
	60mm	*5.0*	*69.6*	*241.3*	*60.2*	*174.8*	*201.7*	*M16*	*30.7*	*22.4*	*137.2*	*84.1*	*69.9*	*22.9*	*46.7*	*108.0*	*215.9*	*22.4*	*3.0*
215	2-15/16	21.0	3.02	11.75	2.88	8.50	9.50	7/8	1.44	1.00	6.75	4.00	3.50	0.86	2.16	5.48	10.96	1.04	0.12
	75mm	*9.3*	*76.7*	*298.5*	*73.2*	*215.9*	*241.3*	*M22*	*36.6*	*25.4*	*171.5*	*101.6*	*88.9*	*21.8*	*54.9*	*139.2*	*278.4*	*26.4*	*3.0*
215	2-15/16	21.0	3.02	11.75	2.88	8.50	9.50	7/8	1.44	1.00	6.50	4.00	3.25	0.86	2.16	5.48	10.96	1.04	0.12
(SXRU)	*75mm*	*9.3*	*76.7*	*298.5*	*73.2*	*215.9*	*241.3*	*M22*	*36.6*	*25.4*	*165.1*	*101.6*	*82.6*	*21.8*	*54.9*	*139.2*	*278.4*	*26.4*	*3.0*

Eccentric Collar Ball Bearing
Setscrew VSC Ball Bearing
Eccentric SXV Collar Ball Bearing
Take-Up Frames
Engineering
Part Number Index
Keyword Index

SELECTION/DIMENSIONS

Eccentric Collar Ball Bearings
SXRB NORMAL DUTY PILLOW BLOCK

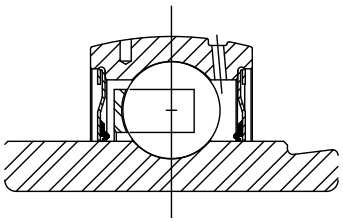

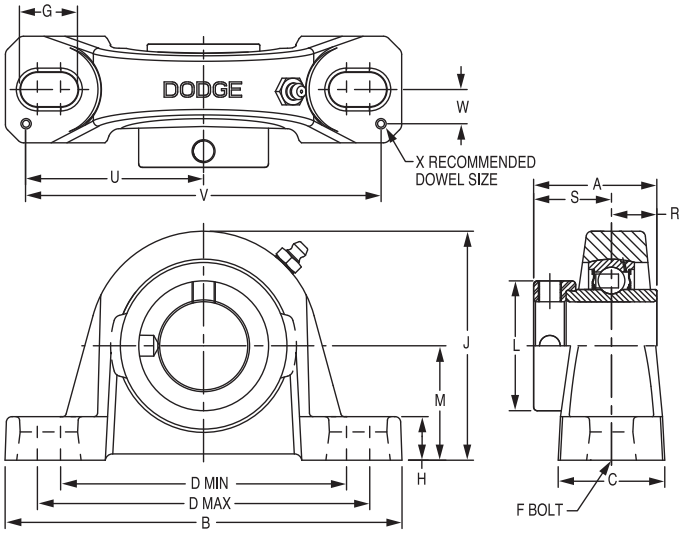

Series	Shaft Size	Standard		With Flingers	
		Part No.	Description	Part No.	Description
203 (SXR)	1/2	**131800**	P2B-SXR-008	**@**	P2B-SXR-008-FF
	5/8	**131801**	P2B-SXR-010	**@**	P2B-SXR-010-FF
	17mm	**@**	*P2B-SXR-17M*	**@**	*P2B-SXR-17M-FF*
204	3/4	**131830**	P2B-SXRB-012	**068195**	P2B-SXRB-012-FF
	20mm	**@**	*P2B-SXRB-20M*	**@**	*P2B-SXRB-20M-FF*
205	7/8	**131831**	P2B-SXRB-014	**@**	P2B-SXRB-014-FF
	15/16	**131832**	P2B-SXRB-015	**@**	P2B-SXRB-015-FF
	1	**131833**	P2B-SXRB-100	**068196**	P2B-SXRB-100-FF
	25mm	**@**	*P2B-SXRB-25M*	**@**	*P2B-SXRB-25M-FF*
206	1-1/16	**131834**	P2B-SXRB-101	**@**	P2B-SXRB-101-FF
	1-1/8	**131835**	P2B-SXRB-102	**068197**	P2B-SXRB-102-FF
	1-3/16	**131836**	P2B-SXRB-103	**068198**	P2B-SXRB-103-FF
	1-1/4	**068743**	P2B-SXRB-104S	**@**	P2B-SXRB-104S-FF
	30mm	**@**	*P2B-SXRB-30M*	**@**	*P2B-SXRB-30M-FF*
207	1-1/4	**131837**	P2B-SXRB-104	**068199**	P2B-SXRB-104-FF
	1-5/16	**131838**	P2B-SXRB-105	**@**	P2B-SXRB-105-FF
	1-3/8	**131839**	P2B-SXRB-106	**068200**	P2B-SXRB-106-FF
	1-7/16	**131840**	P2B-SXRB-107	**068201**	P2B-SXRB-107-FF
	35mm	**@**	*P2B-SXRB-35M*	**@**	*P2B-SXRB-35M-FF*

@ Assembled to order

DODGE®



Eccentric Collar Ball Bearings
SXRB NORMAL DUTY PILLOW BLOCK

Series	Shaft Size	Weight lbs. kg.	A	B	C	D		F Bolt Dia.	G	H	J	L	M	R	S	U	V	W	X
						min.	max.												
203 (SXR)	1/2	1.2	1.47	5.00	1.20	3.25	4.06	3/8	0.84	0.47	2.14	1.13	1.06	0.55	0.92	2.25	4.50	0.38	0.12
	5/8	1.0																	
	17mm	*.5*	*37.3*	*127.0*	*30.5*	*82.6*	*103.1*	*M10*	*21.3*	*11.9*	*54.4*	*28.7*	*26.9*	*14.0*	*23.4*	*57.2*	*114.3*	*9.7*	*3.0*
204	3/4	1.5	1.55	5.25	1.34	3.38	4.19	3/8	0.85	0.47	2.49	1.31	1.25	0.50	1.05	2.25	4.50	0.50	0.12
	20mm	*.7*	*39.4*	*133.4*	*34.0*	*85.9*	*106.4*	*M10*	*21.6*	*11.9*	*63.2*	*33.3*	*31.8*	*12.7*	*26.7*	*57.2*	*114.3*	*12.7*	*3.0*
205	7/8	1.8	1.62	5.50	1.40	3.69	4.50	3/8	0.85	0.45	2.64	1.50	1.31	0.56	1.06	2.50	5.00	0.50	0.12
	15/16	1.7																	
	1	1.6																	
	25mm	*.8*	*41.1*	*139.7*	*35.6*	*93.7*	*114.3*	*M10*	*21.6*	*11.4*	*67.1*	*38.1*	*33.3*	*14.2*	*26.9*	*63.5*	*127.0*	*12.7*	*3.0*
206	1-1/16	2.7	1.77	6.25	1.75	4.25	5.00	1/2	0.94	0.62	3.19	1.75	1.56	0.58	1.19	2.88	5.76	0.56	0.12
	1-1/8	2.6																	
	1-3/16	2.5																	
	1-1/4	2.4																	
	30mm	*1.1*	*45.0*	*158.8*	*44.5*	*108.0*	*127.0*	*M12*	*23.9*	*15.8*	*81.0*	*44.5*	*39.6*	*14.7*	*30.2*	*73.2*	*146.3*	*14.2*	*3.0*
207	1-1/4	4.4	1.95	6.50	1.75	4.68	5.44	1/2	0.94	0.65	3.69	2.13	1.81	0.67	1.28	2.91	5.82	0.56	0.12
	1-5/16	4.3																	
	1-3/8	4.2																	
	1-7/16	4.1																	
	35mm	*1.9*	*49.5*	*165.1*	*44.5*	*118.9*	*138.2*	*M12*	*23.9*	*16.5*	*93.7*	*54.1*	*46.0*	*17.0*	*32.5*	*73.9*	*147.8*	*14.2*	*3.0*

FEATURES/BENEFITS PAGE B7-3	HOW TO ORDER/NOMENCLATURE PAGE B7-7	EASY SELECTION PAGE B7-8	ACCESSORIES PAGE B7-44

SELECTION/DIMENSIONS

Eccentric Collar Ball Bearings
SXRB NORMAL DUTY PILLOW BLOCK

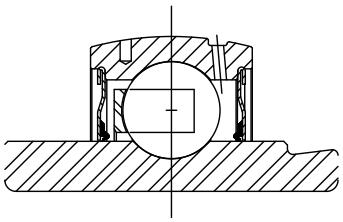

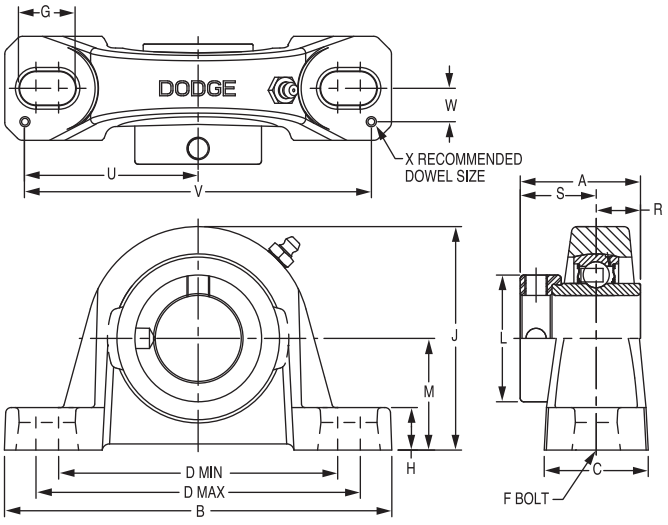

Series	Shaft Size	Standard		With Flingers	
		Part No.	Description	Part No.	Description
208	1-1/2	**131841**	P2B-SXRB-108	**068202**	P2B-SXRB-108-FF
	40mm	***125660***	*P2B-SXRB-40M*	**@**	*P2B-SXRB-40M-FF*
209	1-5/8	**131842**	P2B-SXRB-110	**068203**	P2B-SXRB-110-FF
	1-11/16	**131843**	P2B-SXRB-111	**068204**	P2B-SXRB-111-FF
	1-3/4	**131844**	P2B-SXRB-112	**068205**	P2B-SXRB-112-FF
	45mm	**@**	*P2B-SXRB-45M*	**@**	*P2B-SXRB-45M-FF*
210	1-15/16	**131845**	P2B-SXRB-115	**068206**	P2B-SXRB-115-FF
	2	**131846**	P2B-SXRB-200	**@**	P2B-SXRB-200-FF
	50mm	**@**	*P2B-SXRB-50M*	**@**	*P2B-SXRB-50M-FF*
211	2	**131340**	P2B-SXRB-200L	**@**	P2B-SXRB-200L-FF
	2-3/16	**131847**	P2B-SXRB-203	**@**	P2B-SXRB-203-FF
	55mm	**@**	*P2B-SXRB-55M*	**@**	*P2B-SXRB-55M-FF*
212	2-1/4	**131848**	P2B-SXRB-204	**@**	P2B-SXRB-204-FF
	2-7/16	**131849**	P2B-SXRB-207	**@**	P2B-SXRB-207-FF
	60mm	**@**	*P2B-SXRB-60M*	**@**	*P2B-SXRB-60M-FF*
215	2-15/16	**131434**	P2B-SXRB-215	**@**	P2B-SXRB-215-FF
	75mm	**@**	*P2B-SXRB-75M*	**@**	*P2B-SXRB-75M-FF*

@ Assembled to order



Eccentric Collar Ball Bearings
SXRB NORMAL DUTY PILLOW BLOCK

Series	Shaft Size	Weight lbs. *kg.*	A	B	C	D		F Bolt Dia.	G	H	J	L	M	R	S	U	V	W	X
						min.	max.												
208	1-1/2	5.0	2.12	7.25	1.93	5.18	5.88	1/2	0.91	0.75	4.00	2.38	1.94	0.75	1.37	3.26	6.52	0.69	0.12
	40mm	*2.2*	*53.8*	*184.2*	*49.0*	*131.6*	*149.4*	*M12*	*23.1*	*19.1*	*101.6*	*60.5*	*49.3*	*19.1*	*34.8*	*82.8*	*165.6*	*17.5*	*3.0*
209	1-5/8	6.4	2.13	7.44	2.00	5.50	6.19	1/2	0.90	0.69	4.21	2.50	2.06	0.75	1.38	3.38	6.76	0.69	0.12
	1-11/16	6.3																	
	1-3/4	6.2																	
	45mm	*2.8*	*54.1*	*189.0*	*50.8*	*139.7*	*157.2*	*M12*	*22.9*	*17.5*	*106.9*	*63.5*	*52.3*	*19.1*	*35.1*	*85.9*	*171.7*	*17.5*	*3.0*
210	1-15/16	7.2	2.25	8.12	2.25	6.00	6.68	5/8	1.02	0.68	4.47	2.75	2.19	0.75	1.50	3.69	7.38	0.81	0.12
	2	7.0																	
	50mm	*3.2*	*57.2*	*206.2*	*57.2*	*152.4*	*169.7*	*M16*	*25.9*	*17.3*	*113.5*	*69.9*	*55.6*	*19.1*	*38.1*	*93.7*	*187.5*	*20.6*	*3.0*
211	2	9.5	2.59	8.88	2.30	6.38	7.44	5/8	1.21	0.81	4.90	3.00	2.44	0.88	1.71	3.94	7.88	0.81	0.12
	2-3/16	9.0																	
	55mm	*4.2*	*65.8*	*225.6*	*58.4*	*162.1*	*189.0*	*M16*	*30.7*	*20.6*	*124.5*	*76.2*	*62.0*	*22.4*	*43.4*	*100.1*	*200.2*	*20.6*	*3.0*
212	2-1/4	11.4	2.74	9.50	2.37	6.88	7.94	5/8	1.21	0.81	5.34	3.31	2.69	0.90	1.84	4.25	8.50	0.88	0.12
	2-7/16	10.4																	
	60mm	*5.1*	*69.6*	*241.3*	*60.2*	*174.8*	*201.7*	*M16*	*30.7*	*20.6*	*135.6*	*84.1*	*68.3*	*22.9*	*46.7*	*108.0*	*215.9*	*22.4*	*3.0*
215	2-15/16	21.0	3.02	11.75	2.88	8.50	9.50	7/8	1.44	1.06	6.56	4.00	3.31	0.86	2.16	5.48	10.96	1.04	0.12
	75mm	*9.3*	*76.7*	*298.5*	*73.2*	*215.9*	*241.3*	*M22*	*36.6*	*26.9*	*166.6*	*101.6*	*84.1*	*21.8*	*54.9*	*139.2*	*278.4*	*26.4*	*3.0*

Eccentric Collar Ball Bearing
Setscrew VSC Ball Bearing
Eccentric SXV Collar Ball Bearing
Take-Up Frames
Engineering
Part Number Index
Keyword Index

SELECTION/DIMENSIONS

Eccentric Collar Ball Bearings
SXRH-E EXPANSION AND SXR NON-EXPANSION NORMAL DUTY PILLOW BLOCKS

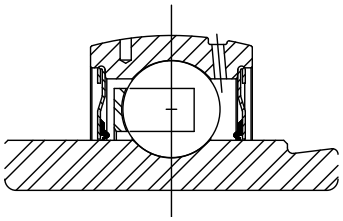

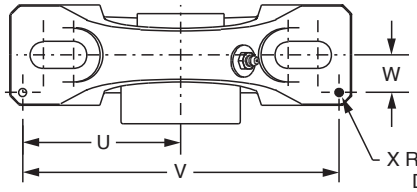

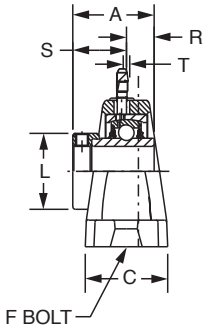

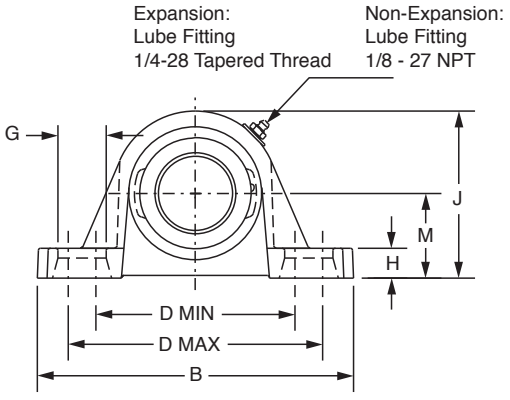

Series	Shaft Size	Expansion		Non-Expansion	
		Part Number	Description	Part Number	Description
206	1 1/16	@	P2B-SXRH-101-E	------	---------
	1 1/8	@	P2B-SXRH-102-E	------	---------
	1 3/16	**126415**	P2B-SXRH-103-E	**129218**	P2B-GTM-103
	1 1/4	@	P2B-SXRH-104S-E	**129161**	P2B-GT-104
	30mm	*@*	*P2B-SXRH-30M-E*	***129049***	*P2B-GTM-30M*
207	1 1/4	@	P2B-SXRH-104-E	------	---------
	1 5/16	@	P2B-SXRH-105-E	------	---------
	1 3/8	@	P2B-SXRH-106-E	------	---------
	1 7/16	**126416**	P2B-SXRH-107-E	**129219**	P2B-GTM-107
	35mm	*@*	*P2B-SXRH-35M-E*	***136259***	*P2B-GTM-35M*
209	1 5/8	@	P2B-SXRH-110-E	------	---------
	1 11/16	@	P2B-SXRH-111-E	**129221**	P2B-GTM-111
	1 3/4	**062500**	P2B-SXRH-112-E	**129222**	P2B-GTM-112
	45mm	*@*	*P2B-SXRH-45M-E*	***136261***	*P2B-GTM-45M*
210	1 15/16	**126417**	P2B-SXRH-115-E	**129223**	P2B-GTM-115
	2	@	P2B-SXRH-200-E	**129224**	P2B-GTM-200
	50mm	*@*	*P2B-SXRH-50M-E*	***136262***	*P2B-GTM-50M*
211	2 3/16	**126418**	P2B-SXRH-203-E	**129225**	P2B-GTM-203
	55mm	*@*	*P2B-SXRH-55M-E*	***136263***	*P2B-GTM-55M*
212	2 7/16	**126419**	P2B-SXRH-207-E	**129227**	P2B-GTM-207
	60mm	*@*	*P2B-SXRH-60M-E*	***068071***	*P2B-GTM-60M*

@ Assembled to order

DODGE®



Eccentric Collar Ball Bearings
SXRH-E EXPANSION AND SXR NON-EXPANSION NORMAL DUTY PILLOW BLOCKS

Series	Shaft Size	Weight lbs. *kg*	A	B	C	D		F Bolt Dia.	G	H
						min.	max.			
	1-1/16	5.4	1.77	6.50	1.75	4.68	5.44	1/2	0.94	0.71
	1-1/8	5.3								
206	1-3/16	5.2								
	1-1/4	5.1								
	30mm	*2.3*	*45.0*	*165.1*	*44.5*	*118.9*	*138.2*	*M12*	*23.9*	*18.0*
	1-1/4	7.5	1.95	7.25	1.93	5.18	5.88	1/2	0.91	0.93
	1-5/16	7.4								
207	1-3/8	7.3								
	1-7/16	7.2								
	35mm	*3.3*	*49.5*	*184.2*	*49.0*	*131.6*	*149.4*	*M12*	*23.1*	*23.6*
	1-5/8	9.3	2.13	8.12	2.25	6.00	6.68	5/8	1.02	0.75
209	1-11/16	9.2								
	1-3/4	9.1								
	45mm	*4.1*	*54.1*	*206.2*	*57.2*	*152.4*	*169.7*	*M16*	*25.9*	*19.1*
	1-15/16	11.1	2.25	8.88	2.30	6.38	7.44	5/8	1.21	0.88
210	2	11.0								
	50mm	*5.0*	*57.2*	*225.6*	*58.4*	*162.1*	*189.0*	*M16*	*30.7*	*22.4*
211	2-3/16	16.3	2.59	9.50	2.37	6.88	7.94	5/8	1.21	0.88
	55mm	*7.4*	*65.8*	*241.3*	*60.2*	*174.8*	*201.7*	*M16*	*30.7*	*22.4*
212	2-7/16	21.4	2.74	10.75	2.69	7.50	8.50	3/4	1.32	0.94
	60mm	*9.7*	*69.6*	*273.1*	*68.3*	*190.5*	*215.9*	*M18*	*33.5*	*23.8*

Series	Shaft Size	J	L	M	R	S	T Total Expansion	U	V	W	X
	1-1/16	3.75	1.75	1.88	0.58	1.19	0.16	2.91	5.82	0.56	0.12
	1-1/8										
206	1-3/16										
	1-1/4										
	30mm	*95.3*	*44.5*	*47.8*	*14.7*	*30.2*	*4.1*	*73.9*	*147.8*	*14.2*	*3.0*
	1-1/4	4.19	2.13	2.13	0.67	1.28	0.16	3.26	6.52	0.69	0.12
	1-5/16										
207	1-3/8										
	1-7/16										
	35mm	*106.4*	*54.1*	*54.1*	*17.0*	*32.5*	*4.1*	*82.8*	*165.6*	*17.5*	*3.0*
	1-5/8	4.53	2.50	2.25	0.75	1.38	0.25	3.69	7.38	0.81	0.12
209	1-11/16										
	1-3/4										
	45mm	*115.1*	*63.5*	*57.2*	*19.1*	*35.1*	*6.4*	*93.7*	*187.5*	*20.6*	*3.0*
	1-15/16	4.96	2.75	2.50	0.75	1.50	0.22	3.94	7.88	0.81	0.12
210	2										
	50mm	*126.0*	*69.9*	*63.5*	*19.1*	*38.1*	*5.6*	*100.1*	*200.2*	*20.6*	*3.0*
211	2-3/16	5.40	3.00	2.75	0.88	1.71	0.22	4.25	8.50	0.88	0.12
	55mm	*137.2*	*76.2*	*69.9*	*22.4*	*43.4*	*5.6*	*108.0*	*215.9*	*22.4*	*3.0*
212	2-7/16	6.09	3.31	3.00	0.90	1.84	0.22	4.88	9.76	0.94	0.12
	60mm	*154.7*	*84.1*	*76.2*	*22.9*	*46.7*	*5.6*	*124.0*	*247.9*	*23.9*	*3.0*

FEATURES/BENEFITS PAGE B7-3	HOW TO ORDER/NOMENCLATURE PAGE B7-7	EASY SELECTION PAGE B7-8	ACCESSORIES PAGE B7-44

SELECTION/DIMENSIONS

Eccentric Collar Ball Bearings
SXR NORMAL DUTY TAPPED BASE PILLOW BLOCKS

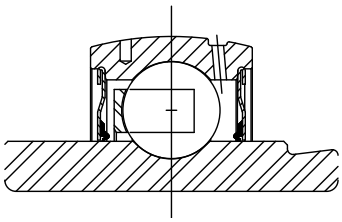

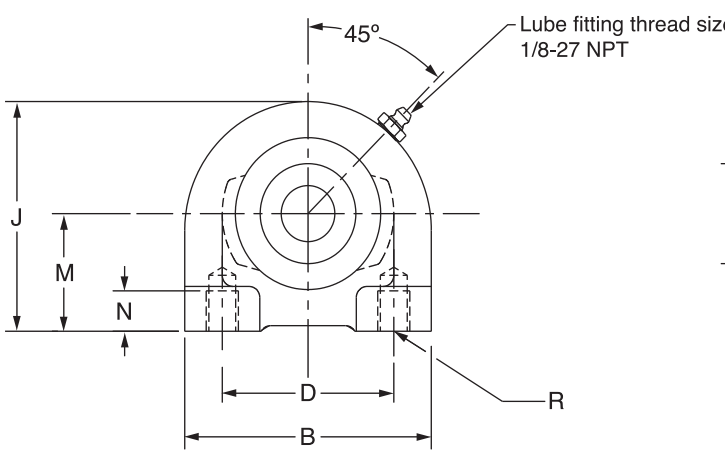

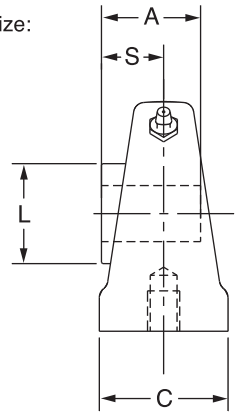

Series	Shaft Size	Part No.	Description
204	3/4	**053219**	TB-SXR-012
	20mm	***053411***	*TB-SXR-20M*
205	7/8	**@**	TB-SXR-014
	15/16	**@**	TB-SXR-015
	1	**051885**	TB-SXR-100
	25mm	***053412***	*TB-SXR-25M*
206	1-1/16	**@**	TB-SXR-101
	1-1/8	**053339**	TB-SXR-102
	1-3/16	**057692**	TB-SXR-103
	1-1/4	**067926**	TB-SXR-104S
	30mm	***053413***	*TB-SXR-30M*
207	1-1/4	**062307**	TB-SXR-104
	1-5/16	**@**	TB-SXR-105
	1-3/8	**064536**	TB-SXR-106
	1-7/16	**049802**	TB-SXR-107
	35mm	***053414***	*TB-SXR-35M*
208	1-1/2	**064910**	TB-SXR-108
	40mm	***053415***	*TB-SXR-40M*
209	1-5/8	**@**	TB-SXR-110
	1-11/16	**068118**	TB-SXR-111
	1-3/4	**049787**	TB-SXR-112
	45mm	***053416***	*TB-SXR-45M*
210	1-15/16	**049803**	TB-SXR-115
	2	**@**	TB-SXR-200
	50mm	***053417***	*TB-SXR-50M*
211	2	**@**	TB-SXR-200L
	2-3/16	**@**	TB-SXR-203
	55mm	***053418***	*TB-SXR-55M*

@ Assembled to order.



Eccentric Collar Ball Bearings
SXR NORMAL DUTY TAPPED BASE PILLOW BLOCKS

Series	Shaft Size	Weight lbs. kg	A	B	C	D	J	L	M	N Min. Tap Depth	R Bolt Hole UNC-Thread	S
204	3/4	1.5	1.55	2.88	1.50	2.00	2.56	1.31	1.31	0.50	3/8-16	1.05
	20mm	*0.6*	*39.4*	*73.2*	*38.1*	*50.8*	*65.0*	*33.3*	*33.4*	*12.7*	*M8x1.25*	*26.7*
205	7/8	2.2	1.62	3.00	1.50	2.00	2.81	1.50	1.44	0.50	3/8-16	1.06
	15/16	2.1										
	1	2.0										
	25mm	*0.8*	*41.1*	*76.2*	*38.1*	*50.8*	*71.4*	*38.1*	*36.5*	*12.7*	*M10x1.5*	*26.9*
206	1-1/16	3.2	1.77	4.00	1.50	3.00	3.38	1.75	1.69	0.63	7/16-14	1.19
	1-1/8	3.0										
	1-3/16	2.8										
	1-1/4	2.6										
	30mm	*1.1*	*45.0*	*101.6*	*38.1*	*76.2*	*85.9*	*44.5*	*42.9*	*16.0*	*M10x1.5*	*30.2*
207	1-1/4	4.4	1.95	4.25	1.88	3.25	3.75	2.13	1.88	0.75	1/2-13	1.28
	1-5/16	4.2										
	1-3/8	4										
	1-7/16	3.8										
	35mm	*1.4*	*49.5*	*108.0*	*47.8*	*82.6*	*95.3*	*54.1*	*47.6*	*19.1*	*M10x1.5*	*32.5*
208	1-1/2	4.8	2.12	4.63	1.88	3.50	3.94	2.38	1.94	0.75	1/2-13	1.37
	40mm	*1.8*	*53.8*	*117.6*	*47.8*	*88.9*	*100.1*	*60.5*	*49.2*	*19.1*	*M12x1.75*	*34.8*
209	1-5/8	5.9	2.13	5.00	2.00	3.75	4.25	2.50	2.13	0.75	1/2-13	1.38
	1-11/16	5.7										
	1-3/4	5.5										
	45mm	*2.1*	*54.1*	*127.0*	*50.8*	*95.3*	*108.0*	*63.5*	*54.0*	*19.1*	*M12x1.75*	*35.1*
210	1-15/16	6.5	2.25	5.50	2.00	4.00	4.63	2.75	2.25	0.88	5/8-11	1.50
	2	6.3										
	50mm	*2.4*	*57.2*	*139.7*	*50.8*	*101.6*	*117.6*	*69.9*	*57.2*	*22.4*	*M16x2*	*38.1*
211	2	9.2	2.59	5.50	2.00	4.00	4.63	3.00	2.25	0.88	5/8-11	1.71
	2-3/16	9										
	55mm	*3.3*	*65.8*	*139.7*	*50.8*	*101.6*	*117.6*	*76.2*	*57.2*	*22.4*	*M16x2*	*43.4*

FEATURES/BENEFITS PAGE B7-3 | HOW TO ORDER/NOMENCLATURE PAGE B7-7 | EASY SELECTION PAGE B7-8 | ACCESSORIES PAGE B7-44

SELECTION/DIMENSIONS

Eccentric Collar Ball Bearings
SXR NORMAL DUTY 2-BOLT FLANGE BEARINGS

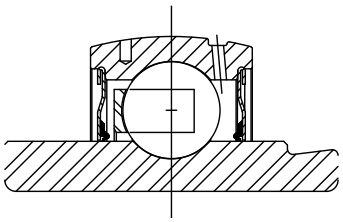

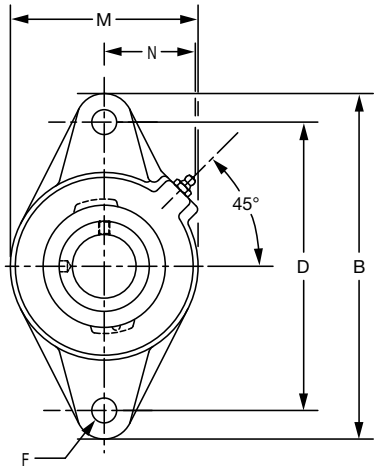

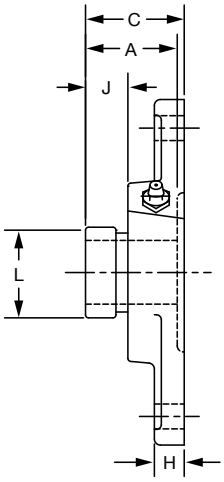

Series	Shaft Size	Standard		No Lube/Sealed for Life (-NL)		With Flingers	
		Part No.	Description	Part No.	Description	Part No.	Description
203	1/2	**131050**	F2B-SXR-008	@	F2B-SXR-008-NL	@	F2B-SXR-008-FF
	5/8	**131052**	F2B-SXR-010	**131079**	F2B-SXR-010-NL	@	F2B-SXR-010-FF
	17mm	***125677***	*F2B-SXR-17M*	@	*F2B-SXR-17M-NL*	@	*F2B-SXR-17M-FF*
204	3/4	**131054**	F2B-SXR-012	@	F2B-SXR-012-NL	@	F2B-SXR-012-FF
	20mm	***125678***	*F2B-SXR-20M*	@	*F2B-SXR-20M-NL*	@	*F2B-SXR-20M-FF*
205	7/8	**131056**	F2B-SXR-014	@	F2B-SXR-014-NL	@	F2B-SXR-014-FF
	15/16	**131057**	F2B-SXR-015	@	F2B-SXR-015-NL	@	F2B-SXR-015-FF
	1	**131058**	F2B-SXR-100	@	F2B-SXR-100-NL	***050951***	F2B-SXR-100-FF
	25mm	***125679***	*F2B-SXR-25M*	@	*F2B-SXR-25M-NL*	@	*F2B-SXR-25M-FF*
206	1-1/16	**131059**	F2B-SXR-101	@	F2B-SXR-101-NL	@	F2B-SXR-101-FF
	1-1/8	**131060**	F2B-SXR-102	@	F2B-SXR-102-NL	@	F2B-SXR-102-FF
	1-3/16	**131061**	F2B-SXR-103	**065635**	F2B-SXR-103-NL	***053617***	F2B-SXR-103-FF
	1-1/4	**049879**	F2B-SXR-104S	**068866**	F2B-SXR-104S-NL	@	F2B-SXR-104S-FF
	30mm	***125680***	*F2B-SXR-30M*	@	*F2B-SXR-30M-NL*	@	*F2B-SXR-30M-FF*
207	1-1/4	**131063**	F2B-SXR-104	@	F2B-SXR-104-NL	***130880***	F2B-SXR-104-FF
	1-5/16	**131064**	F2B-SXR-105	@	F2B-SXR-105-NL	@	F2B-SXR-105-FF
	1-3/8	**131065**	F2B-SXR-106	@	F2B-SXR-106-NL	***068213***	F2B-SXR-106-FF
	1-7/16	**131066**	F2B-SXR-107	**050839**	F2B-SXR-107-NL	***053326***	F2B-SXR-107-FF
	35mm	***125681***	*F2B-SXR-35M*	@	*F2B-SXR-35M-NL*	@	*F2B-SXR-35M-FF*
208	1-1/2	**131067**	F2B-SXR-108	@	F2B-SXR-108-NL	***068214***	F2B-SXR-108-FF
	40mm	***125682***	*F2B-SXR-40M*	@	*F2B-SXR-40M-NL*	@	*F2B-SXR-40M-FF*
209	1-5/8	**131070**	F2B-SXR-110	@	F2B-SXR-110-NL	@	F2B-SXR-110-FF
	1-11/16	**131071**	F2B-SXR-111	**052729**	F2B-SXR-111-NL	@	F2B-SXR-111-FF
	1-3/4	**131072**	F2B-SXR-112	@	F2B-SXR-112-NL	***068215***	F2B-SXR-112-FF
	45mm	***125683***	*F2B-SXR-45M*	@	*F2B-SXR-45M-NL*	@	*F2B-SXR-45M-FF*
210	1-15/16	**131075**	F2B-SXR-115	**056784**	F2B-SXR-115-NL	@	F2B-SXR-115-FF
	2	**131077**	F2B-SXR-200	@	F2B-SXR-200-NL	@	F2B-SXR-200-FF
	50mm	***125684***	*F2B-SXR-50M*	@	*F2B-SXR-50M-NL*	@	*F2B-SXR-50M-FF*
211	2	**@**	F2B-SXR-200L	@	F2B-SXR-200L-NL	@	F2B-SXR-200L-FF
	2-3/16	**131074**	F2B-SXR-203	@	F2B-SXR-203-NL	***068216***	F2B-SXR-203-FF
	55mm	***056862***	*F2B-SXR-55M*	@	*F2B-SXR-55M-NL*	@	*F2B-SXR-55M-FF*

@ Assembled to order

DODGE®



Eccentric Collar Ball Bearings
SXR NORMAL DUTY 2-BOLT FLANGE BEARINGS

Series	Shaft Size	Weight lbs *kg*	A	B	C	D	F Bolt Dia.	H	J	L	M	N
203	1/2	0.9	1.47	3.88	1.45	3.00	3/8	0.38	0.61	1.13	2.13	1.13
	5/8	0.8										
	17mm	*0.4*	*37.3*	*98.6*	*36.8*	*76.2*	*M10*	*9.7*	*15.5*	*28.7*	*54.1*	*28.7*
204	3/4	1.2	1.55	4.41	1.66	3.53	3/8	0.50	0.68	1.31	2.38	1.50
	20mm	*0.5*	*39.4*	*112.0*	*42.2*	*89.7*	*M10*	*12.7*	*17.3*	*33.3*	*60.5*	*38.1*
205	7/8	1.7	1.62	4.88	1.65	3.89	7/16	0.52	0.70	1.50	2.75	1.44
	15/16	1.6										
	1	1.5										
	25mm	*0.7*	*41.1*	*124.0*	*41.9*	*98.8*	*M10*	*13.2*	*17.8*	*38.1*	*69.9*	*36.6*
206	1-1/16	2.4	1.77	5.56	1.81	4.59	7/16	0.50	0.74	1.75	3.13	1.56
	1-1/8	2.3										
	1-3/16	2.2										
	1-1/4	2.1										
	30mm	*1.0*	*45.0*	*141.2*	*46.0*	*116.7*	*M10*	*12.7*	*18.8*	*44.5*	*79.5*	*39.6*
207	1-1/4	3.6	1.95	6.13	1.99	5.12	1/2	0.56	0.77	2.13	3.75	1.84
	1-5/16	3.5										
	1-3/8	3.4										
	1-7/16	3.3										
	35mm	*1.5*	*49.5*	*155.7*	*50.5*	*130.0*	*M12*	*14.2*	*19.6*	*54.1*	*95.3*	*46.7*
208	1-1/2	4.3	2.12	6.75	2.15	5.66	1/2	0.56	0.81	2.38	4.13	1.83
	40mm	*1.9*	*53.8*	*171.5*	*54.6*	*143.8*	*M12*	*14.2*	*20.6*	*60.5*	*104.9*	*46.5*
209	1-5/8	5.3	2.13	7.06	2.18	5.84	1/2	0.63	0.77	2.50	4.38	1.91
	1-11/16	5.1										
	1-3/4	4.9										
	45mm	*2.2*	*54.1*	*179.3*	*55.4*	*148.3*	*M14*	*16.0*	*19.6*	*63.5*	*111.3*	*48.5*
210	1-15/16	5.8	2.25	7.44	2.33	6.19	1/2	0.63	0.86	2.75	4.56	2.03
	2	5.6										
	50mm	*2.6*	*57.2*	*189.0*	*59.2*	*157.2*	*M16*	*16.0*	*21.8*	*69.9*	*115.8*	*51.6*
211	2	7.8	2.59	8.63	2.65	7.25	5/8	0.67	1.05	3.00	5.25	2.27
	2-3/16	7.6										
	55mm	*3.5*	*65.8*	*219.2*	*67.3*	*184.2*	*M16*	*17.0*	*26.7*	*76.2*	*133.4*	*57.7*

FEATURES/BENEFITS PAGE B7-3 | HOW TO ORDER/NOMENCLATURE PAGE B7-7 | EASY SELECTION PAGE B7-8 | ACCESSORIES PAGE B7-44

SELECTION/DIMENSIONS

Eccentric Collar Ball Bearings
SXR NORMAL DUTY 2-BOLT PILOTED FLANGE BEARINGS

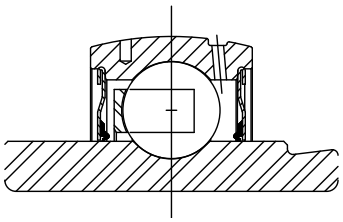

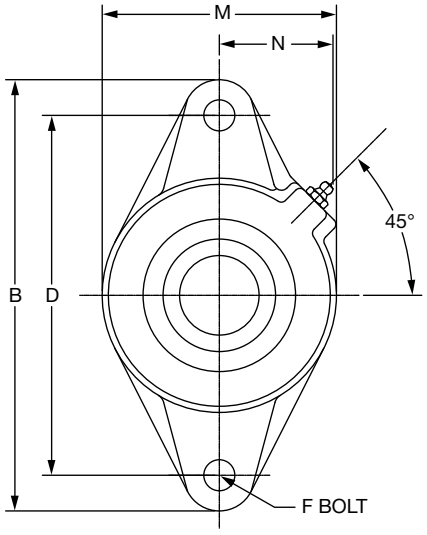

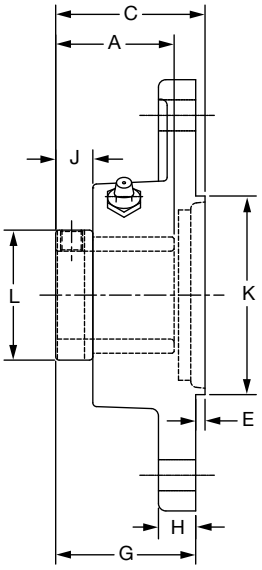

Series	Shaft Size	Part No.	Description
204	3/4	@	F2BZ-SXR-012
	20mm	***130831***	*F2BZ-SXR-20M*
205	7/8	@	F2BZ-SXR-014
	15/16	@	F2BZ-SXR-015
	1	**064289**	F2BZ-SXR-100
	25mm	***130832***	*F2BZ-SXR-25M*
206	1-1/8	@	F2BZ-SXR-102
	1-3/16	@	F2BZ-SXR-103
	1-1/4	@	F2BZ-SXR-104S
	30mm	***130833***	*F2BZ-SXR-30M*
207	1-1/4	@	F2BZ-SXR-104
	1-3/8	@	F2BZ-SXR-106
	1-7/16	@	F2BZ-SXR-107
	35mm	***130834***	*F2BZ-SXR-35M*
208	1-1/2	**068901**	F2BZ-SXR-108
	40mm	***130835***	*F2BZ-SXR-40M*
209	1-5/8	@	F2BZ-SXR-110L
	1-11/16	@	F2BZ-SXR-111
	1-3/4	@	F2BZ-SXR-112
	45mm	***130836***	*F2BZ-SXR-45M*
210	1-15/16	@	F2BZ-SXR-115
	2	@	F2BZ-SXR-200
	50mm	***130837***	*F2BZ-SXR-50M*

@ Assembled to order



Eccentric Collar Ball Bearings
SXR NORMAL DUTY 2-BOLT PILOTED FLANGE BEARINGS

Series	Shaft Size	Weight lbs kg	A	B	C	D	E	F Bolt Dia.	G	H	J	K	L	M	N
204	3/4	1.3	1.55	4.41	1.80	3.53	0.14	3/8	1.66	0.50	0.68	2.165/2.163	1.31	2.38	1.50
	20mm	*0.6*	*39.4*	*112.0*	*45.7*	*89.7*	*3.6*	*M10*	*42.2*	*12.7*	*17.3*	*54.99/54.94*	*33.3*	*60.5*	*38.1*
205	7/8 15/16 1	1.6	1.62	4.88	1.79	3.89	0.14	7/16	1.65	0.52	0.70	2.362/2.360	1.50	2.75	1.44
	25mm	*0.7*	*41.1*	*124.0*	*45.5*	*98.8*	*3.6*	*M10*	*41.9*	*13.2*	*17.8*	*59.99/59.94*	*38.1*	*69.9*	*36.6*
206	1-1/8 1-3/16 1-1/4	2.1	1.77	5.56	1.92	4.59	0.12	7/16	1.81	0.50	0.74	3.150/3.148	1.75	3.13	1.56
	30mm	*0.9*	*45.0*	*141.2*	*48.8*	*116.7*	*3.0*	*M10*	*46.0*	*12.7*	*18.8*	*80.01/79.96*	*44.5*	*79.5*	*39.6*
207	1-1/4 1-3/8 1-7/16	3.1	1.95	6.13	2.14	5.12	0.16	1/2	1.99	0.56	0.77	3.543/3.541	2.13	3.75	1.84
	35mm	*1.3*	*49.5*	*155.7*	*54.4*	*130.0*	*4.1*	*M12*	*50.5*	*14.2*	*19.6*	*89.99/89.94*	*54.1*	*95.3*	*46.7*
208	1-1/2	4.3	2.12	6.75	2.31	5.66	0.16	1/2	2.15	0.56	0.81	3.937/3.935	2.38	4.13	1.83
	40mm	*1.9*	*53.8*	*171.5*	*58.7*	*143.8*	*4.1*	*M12*	*54.6*	*14.2*	*20.6*	*100.00/99.95*	*60.5*	*104.9*	*46.5*
209	1-5/8 1-11/16 1-3/4	4.7	2.13	7.06	2.34	5.84	0.16	1/2	2.18	0.63	0.77	4.134/4.132	2.50	4.38	1.91
	45mm	*2.0*	*54.1*	*179.3*	*59.4*	*148.3*	*4.1*	*M14*	*55.4*	*16.0*	*19.6*	*105.00/104.95*	*63.5*	*111.3*	*48.5*
210	1-15/16 2	5.2	2.25	7.44	2.49	6.19	0.16	1/2	2.33	0.63	0.86	4.134/4.132	2.75	4.56	2.03
	50mm	*2.1*	*57.2*	*189.0*	*63.2*	*157.2*	*4.1*	*M16*	*59.2*	*16.0*	*21.8*	*105.00/104.95*	*69.9*	*115.8*	*51.6*

FEATURES/BENEFITS PAGE B7-3	HOW TO ORDER/NOMENCLATURE PAGE B7-7	EASY SELECTION PAGE B7-8	ACCESSORIES PAGE B7-44

SELECTION/DIMENSIONS



Eccentric Collar Ball Bearings
SXR NORMAL DUTY 4-BOLT FLANGE BEARINGS

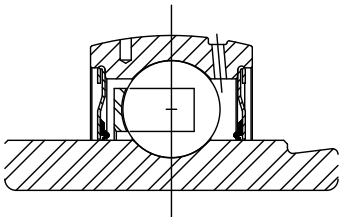

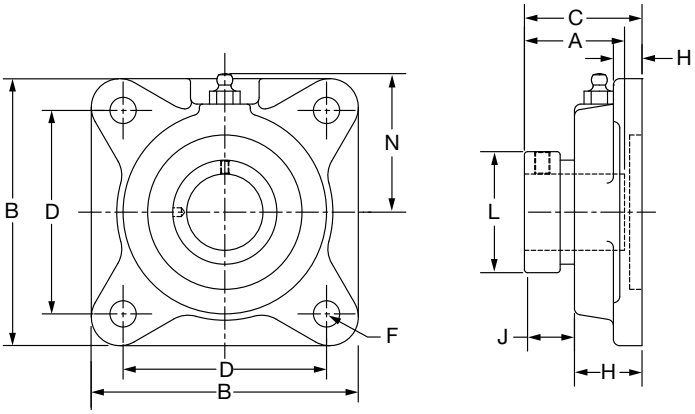

Series	Shaft Size	Standard		With Flingers	
		Part No.	Description	Part No.	Description
203	1/2	**131100**	F4B-SXR-008	@	F4B-SXR-008-FF
	5/8	**131102**	F4B-SXR-010	@	F4B-SXR-010-FF
	17mm	**125666**	*F4B-SXR-17M*	@	*F4B-SXR-17M-FF*
204	3/4	**131104**	F4B-SXR-012	@	F4B-SXR-012-FF
	20mm	**125667**	*F4B-SXR-20M*	@	*F4B-SXR-20M-FF*
205	7/8	**131106**	F4B-SXR-014	@	F4B-SXR-014-FF
	15/16	**131107**	F4B-SXR-015	@	F4B-SXR-015-FF
	1	**131108**	F4B-SXR-100	**068207**	F4B-SXR-100-FF
	25mm	**125668**	*F4B-SXR-25M*	@	*F4B-SXR-25M-FF*
206	1-1/16	**131109**	F4B-SXR-101	@	F4B-SXR-101-FF
	1-1/8	**131110**	F4B-SXR-102	**068208**	F4B-SXR-102-FF
	1-3/16	**131111**	F4B-SXR-103	@	F4B-SXR-103-FF
	1-1/4	**064929**	F4B-SXR-104S	@	F4B-SXR-104S-FF
	30mm	**125669**	*F4B-SXR-30M*	@	*F4B-SXR-30M-FF*
207	1-1/4	**131113**	F4B-SXR-104	**068209**	F4B-SXR-104-FF
	1-5/16	**131114**	F4B-SXR-105	@	F4B-SXR-105-FF
	1-3/8	**131115**	F4B-SXR-106	@	F4B-SXR-106-FF
	1-7/16	**131116**	F4B-SXR-107	@	F4B-SXR-107-FF
	35mm	***125670***	*F4B-SXR-35M*	@	*F4B-SXR-35M-FF*
208	1-1/2	**131117**	F4B-SXR-108	@	F4B-SXR-108-FF
	40mm	***125671***	*F4B-SXR-40M*	@	*F4B-SXR-40M-FF*
209	1-5/8	**131120**	F4B-SXR-110	**068210**	F4B-SXR-110-FF
	1-11/16	**131121**	F4B-SXR-111	**068211**	F4B-SXR-111-FF
	1-3/4	**131122**	F4B-SXR-112	**068212**	F4B-SXR-112-FF
	45mm	***125672***	*F4B-SXR-45M*	@	*F4B-SXR-45M-FF*
210	1-15/16	**131125**	F4B-SXR-115	@	F4B-SXR-115-FF
	2	**131127**	F4B-SXR-200	@	F4B-SXR-200-FF
	50mm	***125673***	*F4B-SXR-50M*	@	*F4B-SXR-50M-FF*
211	2	**131343**	F4B-SXR-200L	@	F4B-SXR-200L-FF
	2-3/16	**131130**	F4B-SXR-203	@	F4B-SXR-203-FF
	55mm	***125674***	*F4B-SXR-55M*	@	*F4B-SXR-55M-FF*
212	2-1/4	**131132**	F4B-SXR-204	@	F4B-SXR-204-FF
	2-7/16	**131135**	F4B-SXR-207	@	F4B-SXR-207-FF
	60mm	***125675***	*F4B-SXR-60M*	@	*F4B-SXR-60M-FF*
215	2-15/16	**131137**	F4B-SXR-215	@	F4B-SXR-215-FF
	75mm	***125676***	*F4B-SXR-75M*	@	*F4B-SXR-75M-FF*

@ Assembled to order

FEATURES/BENEFITS PAGE B7-3 | HOW TO ORDER/NOMENCLATURE PAGE B7-7 | EASY SELECTION PAGE B7-8 | ACCESSORIES PAGE B7-44

DODGE®



Eccentric Collar Ball Bearings
SXR NORMAL DUTY 4-BOLT FLANGE BEARINGS

Series	Shaft Size	Weight lbs *kg*	A	B	C	D	F Bolt Dia.	H	J	L	N
203	1/2	1.2	1.47	3.00	1.45	2.13	3/8	0.44	0.61	1.13	1.69
	5/8	1.1									
	17mm	*0.5*	*37.3*	*76.2*	*36.8*	*54.0*	*M10*	*11.2*	*15.5*	*28.7*	*42.9*
204	3/4	1.6	1.55	3.38	1.66	2.50	3/8	0.44	0.68	1.31	1.94
	20mm	*0.8*	*39.4*	*85.9*	*42.2*	*63.5*	*M10*	*11.2*	*17.3*	*33.3*	*49.3*
205	7/8	2.3	1.62	3.75	1.65	2.75	7/16	0.50	0.70	1.50	2.06
	15/16	2.2									
	1	2.1									
	25mm	*0.9*	*41.1*	*95.3*	*41.9*	*69.9*	*M10*	*12.7*	*17.8*	*38.1*	*52.3*
206	1-1/16	3.1	1.77	4.25	1.81	3.25	7/16	0.50	0.74	1.75	2.19
	1-1/8	3.0									
	1-3/16	2.9									
	1-1/4	2.8									
	30mm	*1.3*	*45.0*	*108.0*	*46.0*	*82.6*	*M10*	*12.7*	*18.8*	*44.5*	*55.6*
207	1-1/4	4.2	1.95	4.75	1.99	3.63	1/2	0.56	0.77	2.13	2.44
	1-5/16	4.1									
	1-3/8	4.0									
	1-7/16	3.9									
	35mm	*1.8*	*49.5*	*120.7*	*50.5*	*92.1*	*M12*	*14.2*	*19.6*	*54.1*	*62.0*
208	1-1/2	5.1	2.12	5.13	2.15	4.00	1/2	0.56	0.81	2.38	2.38
	40mm	*2.3*	*53.8*	*130.3*	*54.6*	*101.6*	*M12*	*14.2*	*20.6*	*60.5*	*60.5*
209	1-5/8	6.4	2.13	5.38	2.18	4.13	1/2	0.63	0.77	2.50	2.75
	1-11/16	6.2									
	1-3/4	6.0									
	45mm	*2.7*	*54.1*	*136.7*	*55.4*	*104.8*	*M12*	*16.0*	*19.6*	*63.5*	*69.9*
210	1-15/16	7.0	2.25	5.63	2.33	4.38	5/8	0.63	0.86	2.75	2.88
	2	6.8									
	50mm	*3.1*	*57.2*	*143.0*	*59.2*	*111.1*	*M16*	*16.0*	*21.8*	*69.9*	*73.2*
211	2	10.2	2.59	6.50	2.65	5.13	5/8	0.69	1.05	3.00	3.25
	2-3/16	9.7									
	55mm	*4.4*	*65.8*	*165.1*	*67.3*	*130.2*	*M16*	*17.5*	*26.7*	*76.2*	*82.6*
212	2-1/4	11.8	2.74	6.88	2.81	5.63	5/8	0.69	1.10	3.31	3.50
	2-7/16	11.3									
	60mm	*6.0*	*69.6*	*174.8*	*71.4*	*141.2*	*M16*	*17.5*	*27.9*	*84.1*	*88.9*
215	2-15/16	18.2	3.02	7.75	3.58	6.00	3/4	1.00	1.33	4.00	3.88
	75mm	*8.2*	*76.7*	*196.9*	*90.9*	*152.4*	*M18*	*25.4*	*33.8*	*101.6*	*98.6*

FEATURES/BENEFITS PAGE B7-3	HOW TO ORDER/NOMENCLATURE PAGE B7-7	EASY SELECTION PAGE B7-8	ACCESSORIES PAGE B7-44

SELECTION/DIMENSIONS

Eccentric Collar Ball Bearings
SXR NORMAL DUTY PILOTED FLANGE BEARINGS

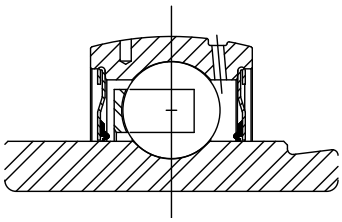

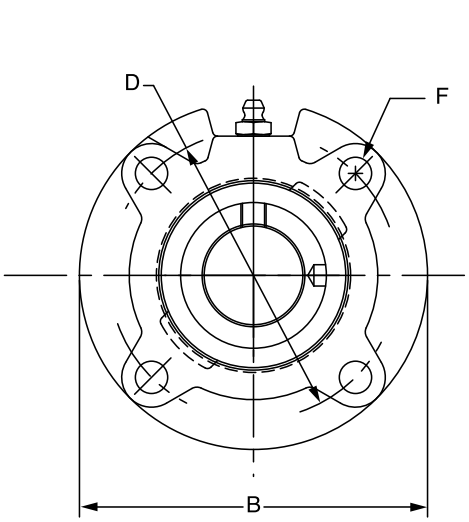

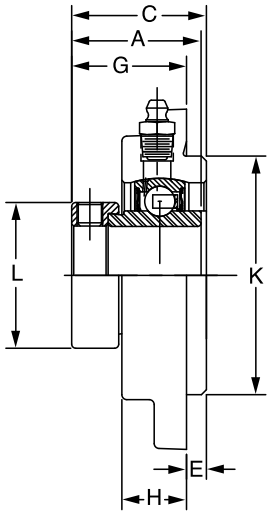

Series	Shaft Size	Standard	
		Part No.	Description
206	1-1/16	@	FC-SXR-101
	1-1/8	@	FC-SXR-102
	1-3/16	@	FC-SXR-103
	1-1/4	**068092**	FC-SXR-104S
	30mm	***130838***	*FC-SXR-30M*
207	1-1/4	**062899**	FC-SXR-104
	1-5/16	@	FC-SXR-105
	1-3/8	@	FC-SXR-106
	1-7/16	**064762**	FC-SXR-107
	35mm	***130839***	*FC-SXR-35M*
208	1-1/2	**049950**	FC-SXR-108
	1-5/8		
	40mm	***130840***	*FC-SXR-40M*
209	1-5/8	@	FC-SXR-110
	1-11/16	**049470**	FC-SXR-111
	1-3/4	**065666**	FC-SXR-112
	45mm	***130841***	*FC-SXR-45M*
210	1-15/16	**064178**	FC-SXR-115
	2	**064096**	FC-SXR-200
	50mm	***130842***	*FC-SXR-50M*
211	2	**052959**	FC-SXR-200L
	2-3/16	**049884**	FC-SXR-203
	55mm	***065555***	*FC-SXR-55M*
212	2-1/4	@	FC-SXR-204
	2-7/16	**052567**	FC-SXR-207
	60mm	***130843***	*FC-SXR-60M*

@ Assembled to order

DODGE®



Eccentric Collar Ball Bearings
SXR NORMAL DUTY PILOTED FLANGE BEARINGS

Series	Shaft Size	Weight lbs kg	A	B	C	D	E	F Bolt Dia.	G	H	K	L
	1-1/16	3.4	1.77	4.38	1.78	3.63	0.25	3/8	1.53	0.81	3.000/2.998	1.75
	1-1/8	3.4										
206	1-3/16	3.2										
	1-1/4	3.1										
	30mm	*1.4*	*45.0*	*111.3*	*45.2*	*92.2*	*6.4*	*M10*	*38.9*	*20.6*	*76.20/76.15*	*44.5*
	1-1/4	4.6	1.95	5.00	2.01	4.13	0.38	3/8	1.63	0.84	3.375/3.373	2.13
	1-5/16	4.5										
207	1-3/8	4.3										
	1-7/16	4.2										
	35mm	*1.9*	*49.5*	*127.0*	*51.1*	*104.9*	*9.7*	*M10*	*41.4*	*21.3*	*85.73/85.67*	*54.1*
	1-1/2	5.1	2.12	5.25	2.15	4.38	0.44	7/16	1.72	0.89	3.625/3.623	2.38
208	1-5/8											
	40mm	*2.2*	*53.8*	*133.4*	*54.6*	*111.3*	*11.2*	*M12*	*43.7*	*22.6*	*92.08/92.02*	*60.5*
	1-5/8	6.1	2.13	5.75	2.14	4.75	0.44	1/2	1.70	0.91	4.000/3.998	2.50
	1-11/16	5.9										
209	1-3/4	5.9										
	45mm	*2.6*	*54.1*	*146.1*	*54.4*	*120.7*	*11.2*	*M12*	*43.2*	*23.1*	*101.60/101.55*	*63.5*
	1-15/16	7.1	2.25	6.13	2.29	5.13	0.47	1/2	1.82	0.92		2.75
210	2	6.9									4.250/4.248	
	50mm	*3.2*	*57.2*	*155.7*	*58.2*	*130.3*	*11.9*	*M12*	*46.2*	*23.4*		*69.9*
	2	8.4	2.59	6.38	2.71	5.38	0.63	1/2	2.09	1.00	*107.95/107.90*	3.00
211	2-3/16	8.1									4.500/4.498	
	55mm	*3.7*	*65.8*	*162.1*	*68.8*	*136.7*	*16.0*	*M12*	*53.1*	*25.4*		*76.2*
	2-1/4	10.7	2.74	7.13	2.97	6.00	0.88	1/2	2.10	1.00	*114.30/114.25*	3.31
212	2-7/16	10.5									5.000/4.998	
	60mm	*4.9*	*69.6*	*181.1*	*75.4*	*152.4*	*22.4*	*M12*	*53.3*	*25.4*	*127.00/126.95*	*84.1*

FEATURES/BENEFITS PAGE B7-3	HOW TO ORDER/NOMENCLATURE PAGE B7-7	EASY SELECTION PAGE B7-8	ACCESSORIES PAGE B7-44

SELECTION/DIMENSIONS

Eccentric Collar Ball Bearings
SXR NORMAL DUTY NARROW SLOT TAKE-UP BEARINGS

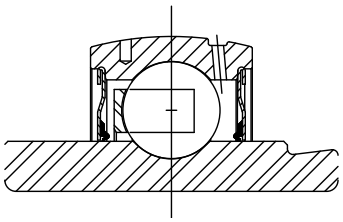

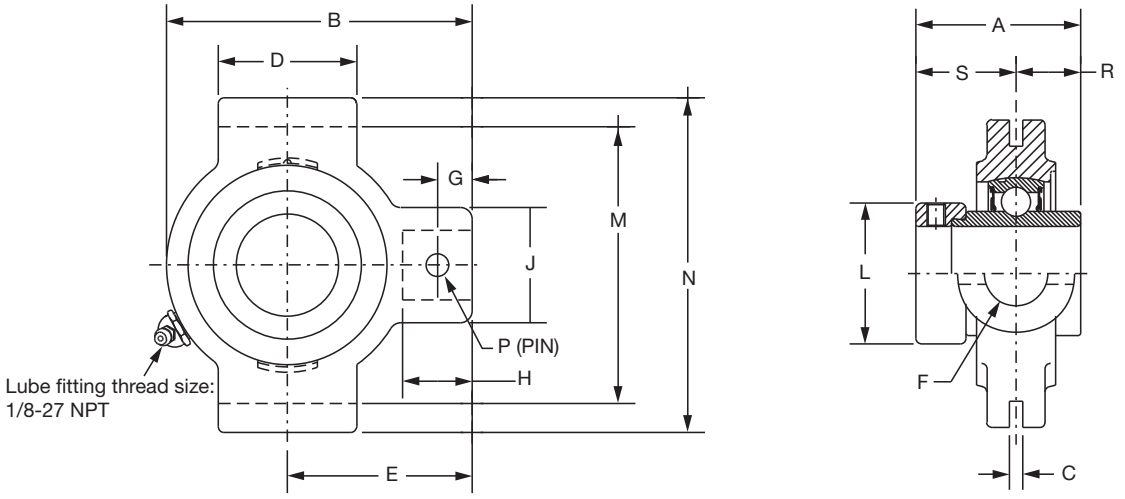

Series	Shaft Size	Standard	
		Part No.	Description
204	3/4	**131154**	NSTU-SXR-012
205	7/8	**131156**	NSTU-SXR-014
	15/16	**131157**	NSTU-SXR-015
	1	**131158**	NSTU-SXR-100
206	1-1/16	**131159**	NSTU-SXR-101
	1-1/8	**131160**	NSTU-SXR-102
	1-3/16	**131161**	NSTU-SXR-103
	1-1/4	**@**	NSTU-SXR-104S
207	1-1/4	**131163**	NSTU-SXR-104
	1-5/16	**131164**	NSTU-SXR-105
	1-3/8	**131165**	NSTU-SXR-106
	1-7/16	**131166**	NSTU-SXR-107
208	1-1/2	**131167**	NSTU-SXR-108
209	1-5/8	**131170**	NSTU-SXR-110
	1-11/16	**131171**	NSTU-SXR-111
	1-3/4	**131172**	NSTU-SXR-112
210	1-15/16	**131175**	NSTU-SXR-115
	2	**131177**	NSTU-SXR-200
211	2	**@**	NSTU-SXR-200L
	2-3/16	**131180**	NSTU-SXR-203
212	2-1/4	**131182**	NSTU-SXR-204
	2-7/16	**131185**	NSTU-SXR-207

@ Assembled to order



Eccentric Collar Ball Bearings
SXR NORMAL DUTY NARROW SLOT TAKE-UP BEARINGS

Series	Shaft Size	Weight lbs	Take-Up Frame Size	A	B	C	D	E	F Screw Dia.	G	H	J	L	M	N	P Pin Dia.	R	S
204	3/4	1.5	NS210	1.55	3.50	0.250	1.50	2.19	3/4	0.44	0.88	1.38	1.31	2.635/2.605	3.13	0.32	0.50	1.05
205	7/8 15/16 1	1.7 1.6 1.5	NS210	1.62	3.56	0.250	1.50	2.19	3/4	0.44	0.88	1.38	1.50	2.635/2.605	3.13	0.32	0.56	1.06
206	1-1/16 1-1/8 1-3/16 1-1/4	2.9 2.8 2.6 2.5	NS308	1.77	4.31	0.250	2.50	2.69	3/4	0.50	0.94	1.38	1.75	3.510/3.480	4.13	0.32	0.58	1.19
207	1-1/4 1-5/16 1-3/8 1-7/16	3.0 2.8 2.7 2.5	NS308	1.95	4.50	0.250	2.50	2.69	3/4	0.50	0.94	1.38	2.13	3.510/3.480	4.13	0.32	0.67	1.28
208	1-1/2	5.0	NS400	2.12	5.38	0.313	3.00	3.25	7/8	0.66	1.16	1.63	2.38	4.015/3.985	4.75	0.38	0.75	1.37
209	1-5/8 1-11/16 1-3/4	5.4 5.2 5.0	NS400	2.13	5.44	0.313	3.00	3.25	7/8	0.72	1.22	1.63	2.50	4.015/3.985	4.75	0.38	0.75	1.38
210	1-15/16 2	5.7 5.3	NS400	2.25	5.50	0.313	3.00	3.25	7/8	0.59	1.09	1.63	2.75	4.015/3.985	4.75	0.38	0.75	1.50
211	2 2-3/16	7.4 7.2	NS407	2.59	6.13	0.313	3.50	3.63	1	0.69	1.28	1.75	3.00	4.448/4.418	5.38	0.44	0.88	1.71
212	2-1/4 2-7/16	10.0 9.0	NS415	2.74	6.69	0.313	3.75	3.88	1	0.69	1.28	1.63	3.31	4.947/4.917	5.75	0.44	0.90	1.84

FEATURES/BENEFITS PAGE B7-3	HOW TO ORDER/NOMENCLATURE PAGE B7-7	EASY SELECTION PAGE B7-8	ACCESSORIES PAGE B7-44

SELECTION/DIMENSIONS



Eccentric Collar Ball Bearings
SXR NORMAL DUTY WIDE SLOT TAKE-UP BEARINGS

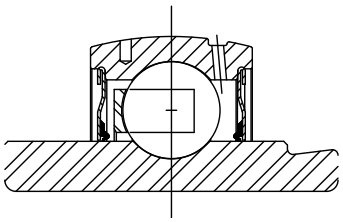

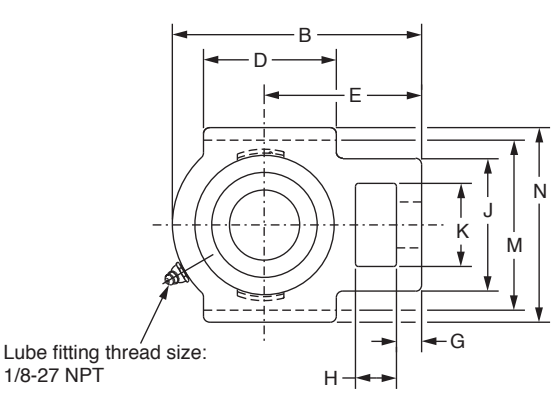

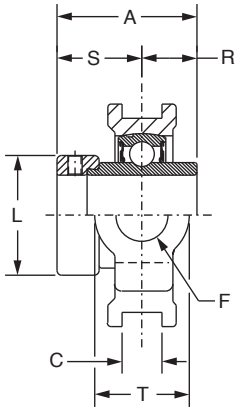

Series	Shaft Size	Standard		No Lube/Sealed for Life (-NL)	
		Part No.	Description	Part No.	Description
204	3/4	**131204**	WSTU-SXR-012	**@**	WSTU-SXR-012-NL
	20mm	***130845***	*WSTU-SXR-20M*	**@**	*WSTU-SXR-20M-NL*
205	7/8	**131206**	WSTU-SXR-014	**068471**	WSTU-SXR-014-NL
	15/16	**131207**	WSTU-SXR-015	**@**	WSTU-SXR-015-NL
	1	**131208**	WSTU-SXR-100	**@**	WSTU-SXR-100-NL
	25mm	***130846***	*WSTU-SXR-25M*	**@**	*WSTU-SXR-25M-NL*
206	1-1/16	**131209**	WSTU-SXR-101	**@**	WSTU-SXR-101-NL
	1-1/8	**131210**	WSTU-SXR-102	**@**	WSTU-SXR-102-NL
	1-3/16	**131211**	WSTU-SXR-103	**065634**	WSTU-SXR-103-NL
	1-1/4	**@**	WSTU-SXR-104S	**@**	WSTU-SXR-104S-NL
	30mm	***130847***	*WSTU-SXR-30M*	**@**	*WSTU-SXR-30M-NL*
207	1-1/4	**131213**	WSTU-SXR-104	**068471**	WSTU-SXR-104-NL
	1-5/16	**131214**	WSTU-SXR-105	**@**	WSTU-SXR-105-NL
	1-3/8	**131215**	WSTU-SXR-106	**@**	WSTU-SXR-106-NL
	1-7/16	**131216**	WSTU-SXR-107	**051606**	WSTU-SXR-107-NL
	35mm	***130848***	*WSTU-SXR-35M*	**@**	*WSTU-SXR-35M-NL*
208	1-1/2	**131217**	WSTU-SXR-108	**058996**	WSTU-SXR-108-NL
	40mm	***130849***	*WSTU-SXR-40M*	*@*	*WSTU-SXR-40M-NL*
209	1-5/8	**131220**	WSTU-SXR-110	**@**	WSTU-SXR-110-NL
	1-11/16	**131221**	WSTU-SXR-111	**@**	WSTU-SXR-111-NL
	1-3/4	**131222**	WSTU-SXR-112	**@**	WSTU-SXR-112-NL
	45mm	***130850***	*WSTU-SXR-45M*	**@**	*WSTU-SXR-45M-NL*
210	1-15/16	**131225**	WSTU-SXR-115	**@**	WSTU-SXR-115-NL
	2	**131227**	WSTU-SXR-200	**049845**	WSTU-SXR-200-NL
	50mm	***130851***	*WSTU-SXR-50M*	**@**	*WSTU-SXR-50M-NL*
211	2	**@**	WSTU-SXR-200L	**@**	WSTU-SXR-200L-NL
	2-3/16	**131230**	WSTU-SXR-203	**@**	WSTU-SXR-203-NL
	55mm	***130852***	*WSTU-SXR-55M*	**@**	*WSTU-SXR-55M-NL*
212	2-1/4	**131232**	WSTU-SXR-204	**@**	WSTU-SXR-204-NL
	2-7/16	**131235**	WSTU-SXR-207	**052045**	WSTU-SXR-207-NL
	60mm	***130853***	*WSTU-SXR-60M*	**@**	*WSTU-SXR-60M-NL*
215	2-15/16	**049385**	WSTU-SXR-215	**@**	WSTU-SXR-215-NL
	75mm	***130854***	*WSTU-SXR-75M*	**@**	*WSTU-SXR-75M-NL*

@ Assembled to order



Eccentric Collar Ball Bearings
SXR NORMAL DUTY WIDE SLOT TAKE-UP BEARINGS

Series	Shaft Size	Weight lbs kg	Take-Up Frame Size	A	B	C	D	E	F Screw Dia.	G	H	J	K	L	M	N	R	S	T
204	3/4	2.1	WS300	1.55	3.69	0.531	2.00	2.38	5/8	0.38	0.63	2.00	1.25	1.31	2.985/3.015	3.63	0.50	1.05	1.38
	20mm	*1.0*		*39.4*	*93.7*	*13.49*	*50.8*	*60.5*	*15.9*	*9.7*	*16.0*	*50.8*	*31.8*	*33.3*	*75.82/76.58*	*92.2*	*12.7*	*26.7*	*35.1*
205	7/8 15/16 1	2.3 2.2 2.1	WS300	1.62	3.81	0.531	2.00	2.44	5/8	0.38	0.63	2.00	1.31	1.50	2.985/3.015	3.63	0.56	1.06	1.38
	25mm	*1.0*		*41.1*	*96.8*	*13.49*	*50.8*	*62.0*	*15.9*	*9.7*	*16.0*	*50.8*	*33.3*	*38.1*	*75.82/76.58*	*92.2*	*14.2*	*26.9*	*35.1*
206	1-1/16 1-1/8 1-3/16 1-1/4	3.1 2.9 2.8 2.7	WS308	1.77	4.38	0.531	2.25	2.75	3/4	0.38	0.63	2.19	1.44	1.75	3.480/3.510	4.13	0.58	1.19	1.63
	30mm	*1.3*		*45.0*	*111.3*	*13.49*	*57.2*	*69.9*	*19.1*	*9.7*	*16.0*	*55.6*	*36.6*	*44.5*	*88.39/89.15*	*104.9*	*14.7*	*30.2*	*41.3*
207	1-1/4 1-5/16 1-3/8 1-7/16	3.8 3.7 3.6 3.5	WS308	1.95	4.87	0.531	2.50	3.06	3/4	0.50	0.63	2.50	1.44	2.13	3.480/3.510	4.13	0.67	1.28	1.63
	35mm	*1.6*		*49.5*	*123.7*	*13.49*	*63.5*	*77.7*	*19.1*	*12.7*	*16.0*	*63.5*	*36.6*	*54.1*	*88.39/89.15*	*104.9*	*17.0*	*32.5*	*41.3*
208	1-1/2	6.2	WS400	2.12	5.69	0.688	3.25	3.50	1	0.63	0.75	3.25	1.94	2.38	3.985/4.015	4.50	0.75	1.37	1.94
	40mm	*2.8*		*53.8*	*144.5*	*17.48*	*82.6*	*88.9*	*25.4*	*16.0*	*19.1*	*82.6*	*49.3*	*60.5*	*101.22/101.98*	*114.3*	*19.1*	*34.8*	*49.3*
209	1-5/8 1-11/16 1-3/4	6.5 6.4 6.3	WS400	2.13	5.63	0.688	3.25	3.44	1	0.63	0.75	3.25	1.94	2.50	3.985/4.015	4.75	0.75	1.38	1.94
	45mm	*2.9*		*54.1*	*143.0*	*17.48*	*82.6*	*87.4*	*25.4*	*16.0*	*19.1*	*82.6*	*49.3*	*63.5*	*101.22/101.98*	*120.7*	*19.1*	*35.1*	*49.3*
210	1-15/16 2	6.9 6.8	WS400	2.25	5.82	0.688	3.38	3.56	1	0.63	0.75	3.25	1.94	2.75	3.985/4.015	4.75	0.75	1.50	1.94
	50mm	*3.1*		*57.2*	*147.8*	*17.48*	*85.9*	*90.4*	*25.4*	*16.0*	*19.1*	*82.6*	*49.3*	*69.9*	*101.22/101.98*	*120.7*	*19.1*	*38.1*	*49.3*
211	2 2-3/16	10.3 10.0	WS502	2.59	6.69	1.063	3.75	4.19	1-1/4	0.75	1.00	4.00	2.50	3.00	5.110/5.140	5.88	0.88	1.71	2.50
	55mm	*4.7*		*65.8*	*169.9*	*27.00*	*95.3*	*106.4*	*31.8*	*19.1*	*25.4*	*101.6*	*63.5*	*76.2*	*129.79/130.56*	*149.4*	*22.4*	*43.4*	*63.5*
212	2-1/4 2-7/16	13.0 12.8	WS502	2.74	7.50	1.063	4.00	4.69	1-1/4	0.75	1.25	4.00	2.50	3.31	5.110/5.140	5.88	0.90	1.84	2.50
	60mm	*5.9*		*69.6*	*190.5*	*27.00*	*101.6*	*119.1*	*31.8*	*19.1*	*31.8*	*101.6*	*63.5*	*84.1*	*129.79/130.56*	*149.4*	*22.9*	*46.7*	*63.5*
215	2-15/16	21	WS515	3.02	9.13	1.063	4.75	5.50	1-1/2	0.81	1.25	4.38	2.75	4.00	5.923/5.953	6.69	0.86	2.16	2.75
	75mm	*9.6*		*76.7*	*231.9*	*27.00*	*120.7*	*139.7*	*38.1*	*20.6*	*31.8*	*111.3*	*69.9*	*101.6*	*150.44/151.21*	*169.9*	*21.8*	*54.9*	*69.9*

FEATURES/BENEFITS PAGE B7-3	HOW TO ORDER/NOMENCLATURE PAGE B7-7	EASY SELECTION PAGE B7-8	ACCESSORIES PAGE B7-44

SELECTION/DIMENSIONS

Eccentric Collar Ball Bearings
TYPE GXR NORMAL DUTY TOP ANGLE TAKE-UP BEARINGS

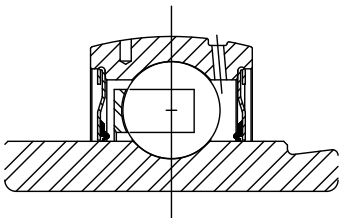

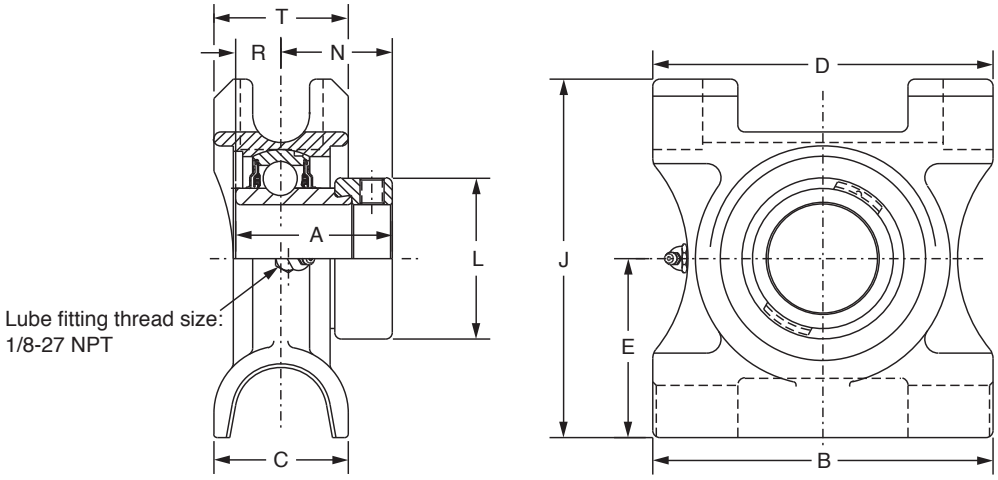

Series	Shaft Size	Part No.	Description
210	1-15/16	**131536**	TP-GXR-115
	2	**131537**	TP-GXR-200
211	2	**@**	TP-GXR-200L
	2-3/16	**131540**	TP-GXR-203
212	2-1/4	**131542**	TP-GXR-204
	2-7/16	**131545**	TP-GXR-207
215	2-15/16	**@**	TP-GXR-215

@ Assembled to order

Series	Shaft Size	Weight lbs	Take-Up Frame Size	A	B	C	D	E	J	L	N	R	T
210	1-15/16 2	10.2 10	TP10	2.25	6.50	2.38	6.00	3.25	6.38	2.75	1.50	0.75	2.38
211	2 2-3/16	13.2 13	TP20	2.59	7.00	2.50	6.75	3.38	7.88	3.00	1.71	0.88	2.38
212	2-1/4 2-7/16	16.2 16.0	TP30	2.74	7.50	2.75	7.00	3.50	7.44	3.31	1.84	0.90	2.75
215	2-15/16	21.8	TP40	3.02	8.50	2.50	8.00	4.00	8.31	4.00	2.07	0.95	2.75

DODGE®



Eccentric Collar Ball Bearings
SXR NORMAL DUTY HANGER BEARINGS

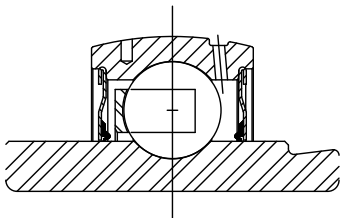

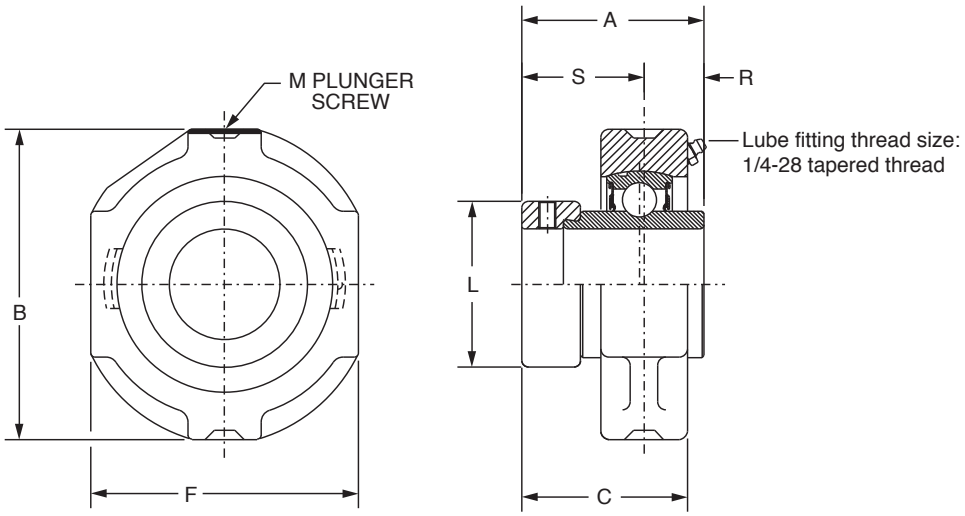

Series	Shaft Size	Part No.	Description
206	1-1/16	**131259**	HNG-SXR-101
	1-1/8	**131260**	HNG-SXR-102
	1-3/16	**131261**	HNG-SXR-103
	1-1/4	**@**	HNG-SXR-104S
207	1-1/4	**131263**	HNG-SXR-104
	1-5/16	**131264**	HNG-SXR-105
	1-3/8	**131265**	HNG-SXR-106
	1-7/16	**131266**	HNG-SXR-107
210	1-15/16	**131275**	HNG-SXR-115
	2	**131276**	HNG-SXR-200

@ Assembled to order

Series	Shaft Size	Weight lbs	A	B	C	F	L	M	R	S
206	1-1/16	2.0	1.77	3.63	1.50	3.00	1.75	1/2	0.58	1.19
	1-1/8	1.9								
	1-3/16	1.8								
	1-1/4	1.7								
207	1-1/4	3.2	1.95	4.25	1.68	3.50	2.13	1/2	0.67	1.28
	1-5/16	3.0								
	1-3/8	2.8								
	1-7/16	2.6								
210	1-15/16	6.2	2.25	5.00	2.00	4.19	2.75	1/2	0.75	1.50
	2	6.0								

FEATURES/BENEFITS PAGE B7-3	HOW TO ORDER/NOMENCLATURE PAGE B7-7	EASY SELECTION PAGE B7-8	ACCESSORIES PAGE B7-44

SELECTION/DIMENSIONS

Eccentric Collar Ball Bearings
SXR NORMAL DUTY SCREW CONVEYOR HANGER BEARINGS

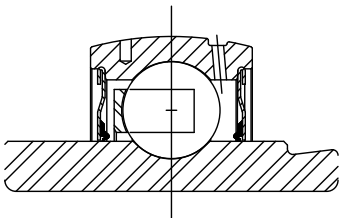

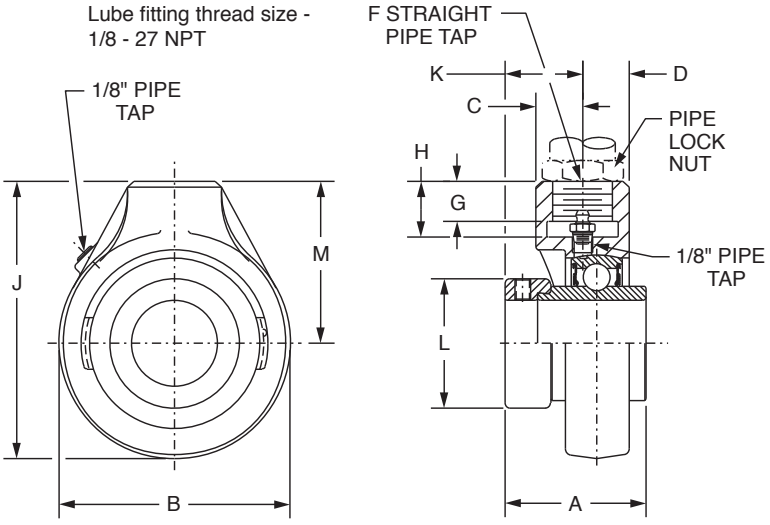

Series	Shaft Size	Part No.	Description
206	1-1/8	@	SCHB-SXR-102
207	1-1/4	@	SCHB-SXR-104
	1-3/8	@	SCHB-SXR-106
208	1-1/2	**131317**	SCHB-SXR-108
210	1-15/16	**131325**	SCHB-SXR-115
	2	**131327**	SCHB-SXR-200
212	2-1/4	@	SCHB-SXR-204
	2-7/16	**131335**	SCHB-SXR-207

@ Assembled to order

Series	Shaft Size	Weight lbs	A	B	C	D	F* (NPSM)	G	H	J	K	L	M
206	1-1/8	3.1	1.77	3.13	0.53	1.03	3/4-14	0.75	0.94	4.06	1.14	1.75	2.50
207	1-1/4	3.7	1.95	3.88	0.82	0.82	3/4-14	0.63	0.94	4.69	1.21	2.13	2.75
	1-3/8	3.5											
208	1-1/2	4.0	2.12	4.00	0.83	0.83	3/4-14	0.63	0.94	4.88	1.20	2.38	2.88
210	1-15/16	5.5	2.25	4.63	0.94	1.78	1 - 11-1/2	0.81	1.13	5.56	1.22	2.75	3.25
	2	5.3											
212	2-1/4	9.4	2.74	5.50	1.16	1.78	1-1/4-11-1/2	1.13	1.44	6.75	1.50	3.31	4.00
	2-7/16	9.2											

* Use straight thread for the pipe. Bearing can be secured with a heavy locknut.

Pipe plug and lube fitting are factory installed and may be reversed from position shown.

Note: Inserts use the ProGard Plus (-FF) seals.

DODGE®



Eccentric Collar Ball Bearings
SXR NORMAL DUTY CYLINDRICAL UNITS

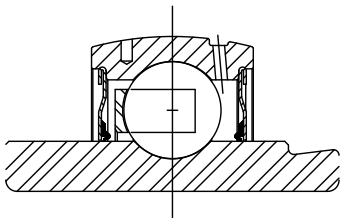

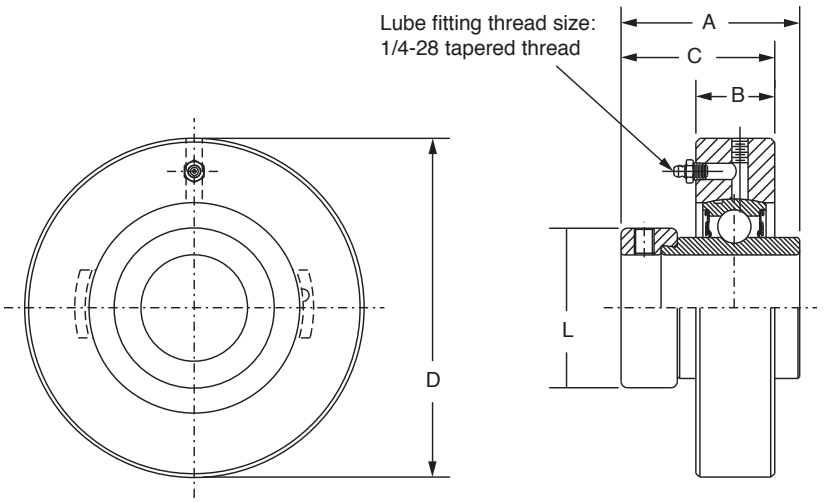

Series	Shaft Size	Part No.	Description
205	7/8	**131356**	CYL-SXR-014
	15/16	**131357**	CYL-SXR-015
	1	**131358**	CYL-SXR-100
206	1-1/16	**131359**	CYL-SXR-101
	1-1/8	**131360**	CYL-SXR-102
	1-3/16	**131361**	CYL-SXR-103
	1-1/4	**@**	CYL-SXR-104S
207	1-1/4	**131363**	CYL-SXR-104
	1-5/16	**131364**	CYL-SXR-105
	1-3/8	**131365**	CYL-SXR-106
	1-7/16	**131366**	CYL-SXR-107

@ Assembled to order

Series	Shaft Size	Weight lbs	A	B	C	D	L
205	7/8	1.4	1.62	0.84	1.47	3.125/3.123	1.50
	15/16	1.3					
	1	1.2					
206	1-1/16	2.2	1.77	0.94	1.63	3.500/3.498	1.75
	1-1/8	2.1					
	1-3/16	2.0					
	1-1/4	1.9					
207	1-1/4	2.8	1.95	1.06	1.78	3.875/3.873	2.13
	1-5/16	2.7					
	1-3/8	2.6					
	1-7/16	2.5					

To prevent the housing from rotating in the machine frame, tap a hole on the joint between the housing O. D. and the machine frame bore and lock with a setscrew

FEATURES/BENEFITS PAGE B7-3	HOW TO ORDER/NOMENCLATURE PAGE B7-7	EASY SELECTION PAGE B7-8	ACCESSORIES PAGE B7-44

SELECTION/DIMENSIONS

Eccentric Collar Ball Bearings
SXR NORMAL DUTY BEARING INSERTS

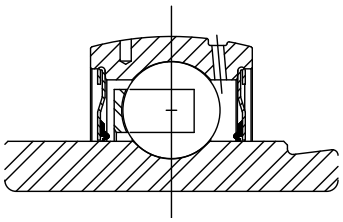

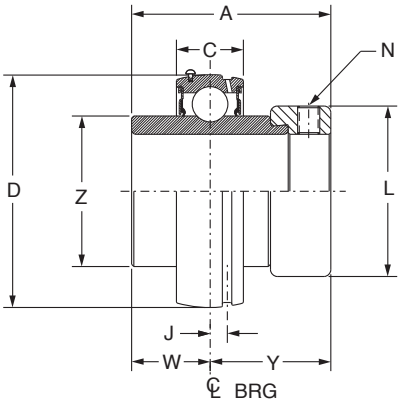

Series	Shaft Size	Part No.	Description
203	1/2	**131900**	INS-SXR-008
	5/8	**131902**	INS-SXR-010
	17mm	***125625***	*INS-SXR-17M*
204	3/4	**131904**	INS-SXR-012
	20mm	***125626***	*INS-SXR-20M*
205	7/8	**131906**	INS-SXR-014
	15/16	**131907**	INS-SXR-015
	1	**131908**	INS-SXR-100
	25mm	***125627***	*INS-SXR-25M*
206	1-1/16	**131909**	INS-SXR-101
	1-1/8	**131910**	INS-SXR-102
	1-3/16	**131911**	INS-SXR-103
	1-1/4	**@**	INS-SXR-104S
	30mm	***125628***	*INS-SXR-30M*
207	1-1/4	**131912**	INS-SXR-104
	1-5/16	**131913**	INS-SXR-105
	1-3/8	**131914**	INS-SXR-106
	1-7/16	**131915**	INS-SXR-107
	35mm	***125629***	*INS-SXR-35M*
208	1-1/2	**131916**	INS-SXR-108
	40mm	***125630***	*INS-SXR-40M*
209	1-5/8	**131918**	INS-SXR-110
	1-11/16	**131919**	INS-SXR-111
	1-3/4	**131920**	INS-SXR-112
	45mm	***125631***	*INS-SXR-45M*
210	1-15/16	**131923**	INS-SXR-115
	2	**131924**	INS-SXR-200
	50mm	***125632***	*INS-SXR-50M*
211	2	**131934**	INS-SXR-200L
	2-3/16	**131927**	INS-SXR-203
	55mm	***125633***	*INS-SXR-55M*
212	2-1/4	**131928**	INS-SXR-204
	2-7/16	**131931**	INS-SXR-207
	60mm	***125634***	*INS-SXR-60M*
215	2-15/16	**131933**	INS-SXR-215
	75mm	***125635***	*INS-SXR-75M*



Eccentric Collar Ball Bearings
SXR NORMAL DUTY BEARING INSERTS

Series	Shaft Size	Weight lbs. *kg*	A	C	D	J	L	N	W	Y	Z
203	1/2	0.3	1.47	0.51	1.5748	0.15	1.13	10-32	0.55	0.92	0.96
	5/8	0.3									
	17mm	*0.1*	*37.3*	*13.0*	*40.000*	*3.8*	*28.7*	*M6x1*	*14.0*	*23.4*	*24.4*
204	3/4	0.5	1.55	0.58	1.8504	0.15	1.31	1/4-28	0.50	1.05	1.12
	20mm	*0.2*	*39.4*	*14.7*	*47.000*	*3.8*	*33.3*	*M6x1*	*12.7*	*26.7*	*28.4*
205	7/8	0.6	1.62	0.59	2.0472	0.16	1.50	1/4-28	0.56	1.06	1.32
	15/16	0.6									
	1	0.5									
	25mm	*0.2*	*41.1*	*15.0*	*52.000*	*4.1*	*38.1*	*M6x1*	*14.2*	*26.9*	*33.5*
206	1-1/16	0.9	1.77	0.69	2.4409	0.16	1.75	5/16-24	0.58	1.19	1.57
	1-1/8	0.9									
	1-3/16	0.8									
	1-1/4	0.8									
	30mm	*0.4*	*45.0*	*17.5*	*62.000*	*4.1*	*44.5*	*M8x1.25*	*14.7*	*30.2*	*39.9*
207	1-1/4	1.4	1.95	0.75	2.8346	0.20	2.13	5/16-24	0.67	1.28	1.84
	1-5/16	1.3									
	1-3/8	1.3									
	1-7/16	1.2									
	35mm	*0.6*	*49.5*	*19.1*	*72.000*	*5.1*	*54.1*	*M8x1.25*	*17.0*	*32.5*	*46.7*
208	1-1/2	1.7	2.12	0.87	3.1496	0.22	2.38	5/16-24	0.75	1.37	2.05
	40mm	*0.8*	*53.8*	*22.1*	*80.000*	*5.6*	*60.5*	*M10x1.5*	*19.1*	*34.8*	*52.1*
209	1-5/8	2.0	2.13	0.87	3.3465	0.25	2.50	5/16-24	0.75	1.38	2.22
	1-11/16	1.9									
	1-3/4	1.8									
	45mm	*0.8*	*54.1*	*22.1*	*85.000*	*6.4*	*63.5*	*M8x1.25*	*19.1*	*35.1*	*56.4*
210	1-15/16	2.2	2.25	0.87	3.5433	0.25	2.75	3/8-24	0.75	1.50	2.43
	2	2.0									
	50mm	*1.0*	*57.2*	*22.1*	*90.000*	*6.4*	*69.9*	*M10x1.5*	*19.1*	*38.1*	*61.7*
211	2	3.4	2.59	0.94	3.9370	0.25	3.00	3/8-24	0.88	1.71	2.71
	2-3/16	2.9									
	55mm	*1.3*	*65.8*	*23.9*	*100.000*	*6.4*	*76.2*	*M12x1.75*	*22.4*	*43.4*	*68.8*
212	2-1/4	3.8	2.74	1.02	4.3307	0.25	3.31	7/16-20	0.90	1.84	2.97
	2-7/16	3.5									
	60mm	*1.7*	*69.6*	*25.9*	*110.000*	*6.4*	*84.1*	*M12x1.75*	*22.9*	*46.7*	*75.4*
215	2-15/16	4.5	3.02	1.14	5.1181	0.28	4.00	7/16-20	0.86	2.16	3.62
	75mm	*2.0*	*76.7*	*29.0*	*130.000*	*7.1*	*101.6*	*M12x1.75*	*21.8*	*54.9*	*91.9*

FEATURES/BENEFITS PAGE B7-3 | HOW TO ORDER/NOMENCLATURE PAGE B7-7 | EASY SELECTION PAGE B7-8 | ACCESSORIES PAGE B7-44

SELECTION/DIMENSIONS

Eccentric Collar Ball Bearings
SXRH-E EXPANSION AND SXRH NON-EXPANSION NORMAL DUTY BEARING INSERTS

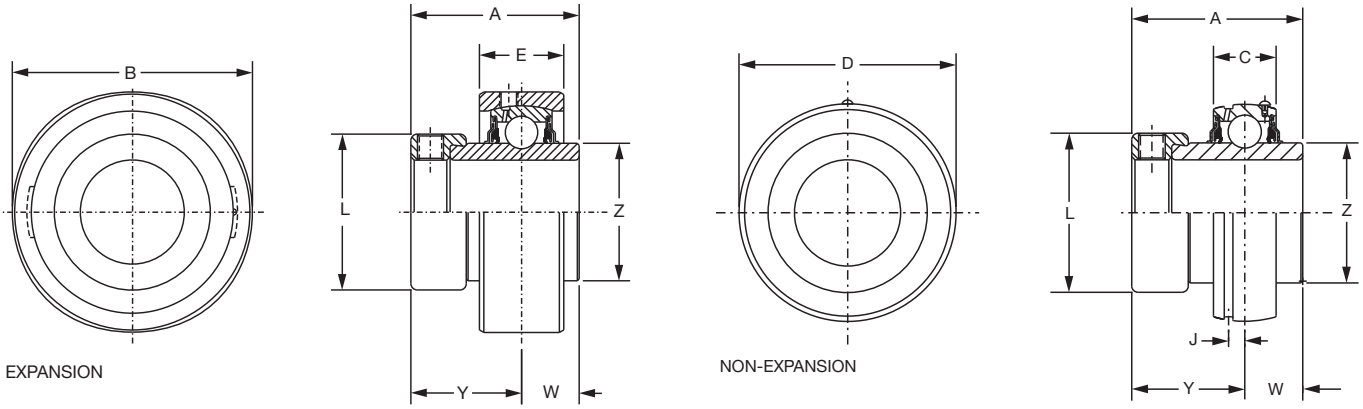

EXPANSION

NON-EXPANSION

Series	Shaft Size	Expansion Insert		Non-Expansion Insert	
		Part No.	Description	Part No.	Description
206	1-1/16	**068849**	INS-SXRH-101-E	@	INS-SXRH-101
	1-1/8	@	INS-SXRH-102-E	@	INS-SXRH-102
	1-3/16	**126475**	INS-SXRH-103-E	**126475**	INS-SXRH-103
	1-1/4	@	INS-SXRH-104S-E	@	INS-SXRH-104S
	30mm	@	*INS-SXRH-30M-E*	@	*INS-SXRH-30M*
207	1-1/4	@	INS-SXRH-104-E	@	INS-SXRH-104
	1-5/16	@	INS-SXRH-105-E	@	INS-SXRH-105
	1-3/8	@	INS-SXRH-106-E	@	INS-SXRH-106
	1-7/16	**126476**	INS-SXRH-107-E	**126476**	INS-SXRH-107
	35mm	@	*INS-SXRH-35M-E*	@	*INS-SXRH-35M*
209	1-5/8	@	INS-SXRH-110-E	@	INS-SXRH-110
	1-11/16	@	INS-SXRH-111-E	@	INS-SXRH-111
	1-3/4	@	INS-SXRH-112-E	@	INS-SXRH-112
	45mm	@	*INS-SXRH-45M-E*	@	*INS-SXRH-45M*
210	1-15/16	**126477**	INS-SXRH-115-E	**126477**	INS-SXRH-115
	2	@	INS-SXRH-200-E	@	INS-SXRH-200
	50mm	@	*INS-SXRH-50M-E*	@	*INS-SXRH-50M*
211	2	@	INS-SXRH-200L-E	@	INS-SXRH-200L
	2-3/16	**126478**	INS-SXRH-203-E	**126478**	INS-SXRH-203
	55mm	@	*INS-SXRH-55M-E*	@	*INS-SXRH-55M*
212	2-1/4	@	INS-SXRH-204-E	@	INS-SXRH-204
	2-7/16	**126479**	INS-SXRH-207-E	**126479**	INS-SXRH-207
	60mm	@	*INS-SXRH-60M-E*	@	*INS-SXRH-60M*



Eccentric Collar Ball Bearings

SXRH-E EXPANSION AND SXRH NON-EXPANSION NORMAL DUTY BEARING INSERTS

Series	Shaft Size	Weight Exp lbs. *kg*	Weight N.E. lbs. *kg*	A	B	C	D	E	J	L	N	W	Y	Z
	1-1/16	1.51	0.91	1.77	2.875	0.69	2.4409	0.94	0.16	1.75	5/16-24	0.58	1.19	1.57
	1-1/8	1.49	0.89											
206	1-3/16	1.43	0.83											
	1-1/4	1.40	0.80											
	30mm	*0.65*	*0.38*	*45.0*	*73.03*	*17.5*	*62.000*	*23.9*	*4.1*	*44.5*	*M8x1.25*	*14.7*	*30.2*	*39.9*
	1-1/4	1.92	1.44	1.95	3.272	0.75	2.8346	1.00	0.20	2.13	5/16-24	0.67	1.28	1.84
	1-5/16	1.85	1.33											
207	1-3/8	1.82	1.26											
	1-7/16	1.81	1.20											
	35mm	*0.78*	*0.55*	*49.5*	*83.11*	*19.1*	*72.000*	*25.4*	*5.1*	*54.1*	*M8x1.25*	*17.0*	*32.5*	*46.7*
	1-5/8	2.97	1.98	2.13	3.813	0.87	3.3465	1.20	0.25	2.50	5/16-24	0.75	1.38	2.22
209	1-11/16	2.89	1.87											
	1-3/4	2.89	1.82											
	45mm	*0.61*	*0.81*	*54.1*	*96.85*	*22.1*	*85.000*	*30.5*	*6.4*	*63.5*	*M8x1.25*	*19.1*	*35.1*	*56.4*
	1-15/16	3.2	2.18	2.25	4.000	0.87	3.5433	1.36	0.25	2.75	3/8-24	0.75	1.50	2.43
210	2	3.12	2.03											
	50mm	*1.41*	*0.95*	*57.2*	*101.60*	*22.1*	*90.000*	*34.5*	*6.4*	*69.9*	*M10x1.5*	*19.1*	*38.1*	*61.7*
	2	4.52	3.35	2.59	4.475	0.94	3.9370	1.38	0.25	3.00	3/8-24	0.88	1.71	2.71
211	2-3/16	4.31	2.88											
	55mm	*1.92*	*1.28*	*65.8*	*113.67*	*23.9*	*100.000*	*35.1*	*6.4*	*76.2*	*M12x1.75*	*22.4*	*43.4*	*68.8*
	2-1/4	5.46	3.78	2.74	5.035	1.02	4.3307	1.55	0.25	3.31	7/16-20	0.90	1.84	2.97
212	2-7/16	5.46	3.45											
	60mm	*2.59*	*1.68*	*69.6*	*127.89*	*25.9*	*110.000*	*39.4*	*6.4*	*84.1*	*M12x1.75*	*22.9*	*46.7*	*75.4*

FEATURES/BENEFITS PAGE B7-3	HOW TO ORDER/NOMENCLATURE PAGE B7-7	EASY SELECTION PAGE B7-8	ACCESSORIES PAGE B7-44



Eccentric Collar Ball Bearings

LUBRICANTS

DODGE ball bearings are factory lubricated with a lithium complex base lubricant. For applications where extreme ambient temperatures or speeds are anticipated or environmental considerations require a different lubricant, DODGE has a variety of lubricants available. Special lubricant options usually require set-up charges and premiums.

HIGH TEMPERATURE

DODGE high temperature bearings are designed to operate in temperatures from 225° F (108° C) to 400° F (205° C). The bearings have adjusted internal clearance, labyrinth seals, retainers, and lubricants to meet the temperature needs of the application. To insure proper replacement, the bearing is identified by a six digit part number etched on a stainless steel nameplate riveted to the housing. The part number identifies the specific feature of the bearing. High temperature bearings are factory assembled to order and are available at extra cost. Consult Dodge Engineering for application assistance at (864)284-5700 or fax (864) 281-2317.

AIR HANDLING

Industrial fans and blowers generally operate at high speeds with bearing requirements of long life and quiet operation. Dodge stocks a complete line of SC and SCM air handling ball bearings that are specifically designed to meet the requirements of the Air Handling Industry. However SXR air handling ball bearings in a wide variety of sizes and housing configurations can be supplied on a made/assembled to order basis. These bearings are 100% inspected for quiet operation and are recommended for fan and blower operations.

OTHER MODIFICATIONS

For applications requiring modifications not listed, we encourage you to contact our Customer Order Engineering Department at (864) 284-5700 or fax (864) 281-2317.

DODGE®



Extreme Duty Ball Bearing
END CLOSURES

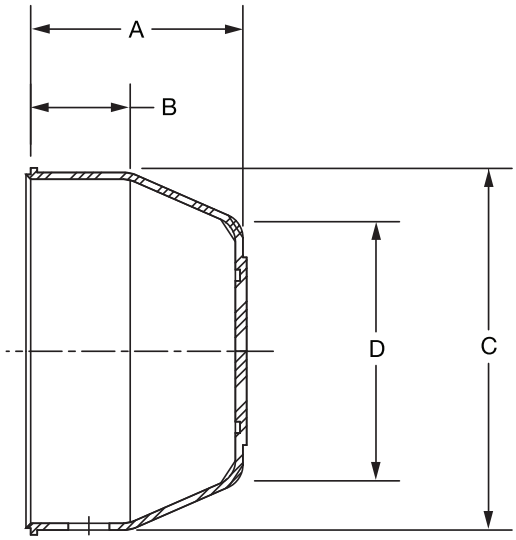

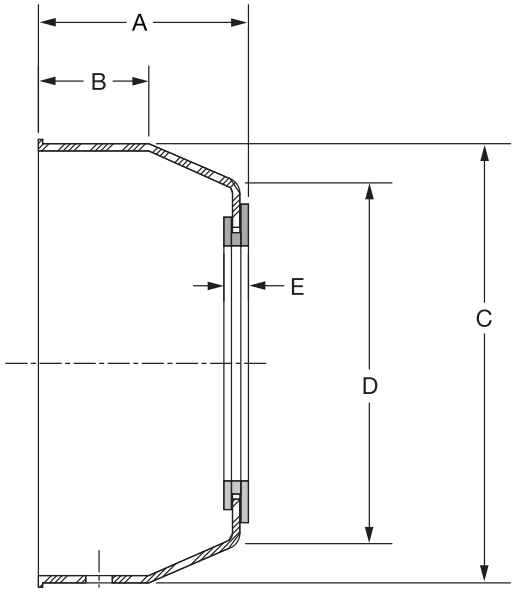

Series	Closed End Closure	
	Part Number	Description
204	**128280**	EC-204-Y
205	**128281**	EC-205-Y
206	**128282**	EC-206-Y
207	**128283**	EC-207-Y
208	**128284**	EC-208-Y
209	**128285**	EC-209-Y
210	**128286**	EC-210-Y
211	**128277**	EC-211-Y
212	**128278**	EC-212-Y

Open End Closure		
Shaft Size	Part Number	Description
3/4	**128350**	ECO-012-Y
20mm	**128363**	ECO-20M-Y
1	**128351**	ECO-100-Y
25mm	**128364**	ECO-25M-Y
1-3/16	**128352**	ECO-103-Y
1-1/4	**128353**	ECO-104S-Y
30mm	**128365**	ECO-30M-Y
1-1/4	**128355**	ECO-104-Y
1-7/16	**128354**	ECO-107-Y
35mm	**128366**	ECO-35M-Y
1-1/2	**128356**	ECO-108-Y
40mm	**128367**	ECO-40M-Y
1-11/16	**128357**	ECO-111-Y
45mm	**128368**	ECO-45M-Y
1-15/16	**128358**	ECO-115-Y
50mm	**128369**	ECO-50M-Y

MODIFICATIONS ACCESSORIES



Extreme Duty Housed Mounted Bearings

Open Cover Extreme Duty Dimensions

Series	Shaft Size	A	B	C	D	E
204	3/4	1-3/16	17/32	1-29/32	1-3/8	3/16
	20mm	*30.2*	*13.5*	*48.4*	*35.1*	*4.9*
205	1	1-1/4	17/32	2-11/64	1-39/64	3/16
	25mm	*31.8*	*13.5*	*55.1*	*40.9*	*4.9*
206	1-3/16 1-1/4	1-25/64	9/16	2-1/2	31/32	3/16
	30mm	*35.3*	*14.2*	*63.5*	*50.0*	*4.9*
207	1-1/4 1-7/16	1-17/32	11/16	2-29/32	2-5/16	3/16
	35mm	*38.9*	*17.5*	*73.9*	*58.9*	*4.9*
208	1-1/2	1-19/32	11/16	3-5/16	2-49/64	13/64
	40mm	*40.6*	*17.5*	*84.1*	*70.1*	*5.1*
209	1-11/16	1-21/32	23/32	3-1/2	2-7/8	13/64
	45mm	*41.9*	*18.3*	*88.9*	*72.9*	*5.1*
210	1-15/16	1-23/32	29/32	3-5/8	3	13/64
	50mm	*43.7*	*23.1*	*91.4*	*76.2*	*5.1*

Closed Cover Extreme Duty Dimensions

Series	A	B	C	D
204	1-1/8	17/32	1-29/32	1-3/8
	28.7	13.5	48.4	35.1
205	3/16	17/32	2-11/64	1-39/64
	30.2	13.5	55.1	40.9
206	1-21/64	9/16	2-1/2	31/32
	33.8	14.2	63.5	50.0
207	1-15/32	11/16	2-29/32	2-5/16
	37.3	17.5	73.9	58.9
208	1-35/64	11/16	3-5/16	2-49/64
	39.1	17.5	84.1	70.1
209	1-19/32	23/32	3-1/2	2-7/8
	40.4	18.3	88.9	72.9
210	1-21/32	29/32	3-5/8	3
	42.2	23.1	91.4	76.2
211	1-51/64	31/32	3-15/16	3-19/64
	45.5	24.6	100.1	83.6
212	1-29/32	1	4-3/8	3-21/32
	48.3	25.4	111.3	92.7



Eccentric Collar Ball Bearings
DODGE Ball Bearing End Covers*

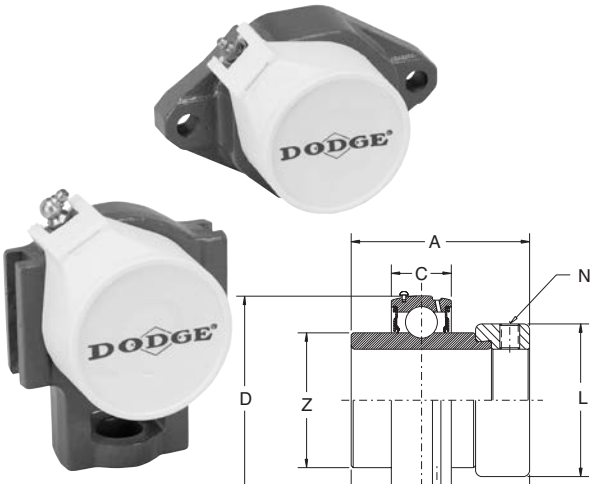

- Fits all styles of DODGE cast iron housed ball bearings: Pillow Blocks, 2 and 4 Bolt Flanges, and Take-Up bearings
- Injected molded, impact resistant, OSHA safety yellow end covers meet requirements for exposed rotating shafts
- Stainless steel “C” Washer for gripping power
- No modification or machining of existing housings required
- Concentric knockout grooves on inside of end cover for thru-shaft
- DODGE six digit part number and description embossed inside
- Operating temperature to 250° F
- For non relubricable/sealed for life applications (-NL), part number 430020 hex head plug is available

Nomenclature

EC - **205** - **P**

- **EC** — End Cover
- **205** — ISO & ABMA ring size
- **P** — “Blank” fits all housing styles as noted; P - Pillow Blocks, including tapped base; X - all other housing styles as noted

Series	Pillow Blocks Std, U, B	Tapped Base PB	2 Bolt Flange	Flanged Bracket	4 Bolt Flange	Piloted Flange (FC)	Narrow Slot Take-Up	Wide Slot Take-Up
203	X		X		X			
204	X	X	X	X	X		X	X
205	X	X	X	X	X		X	X
206	X	X	X	X	X	@	X	X
207	X	X	X	X	X	@	X	X
208	X	X	X		X	@	X	X
209	X	X	X		X	@	X	X
210	X	X	X	X	X	@	X	X
211	X	X	X		X	NA	X	X
212	X		X		X	NA	X	X
214	X				X	NA		X
215	X				X			X
216	X				X	X		X
218	X				X	X		

* = Will not fit LF, LFT, SCHB, HNGR & CLY

@ = Some modification required

NA = Will not fit

X = Will fit

FEATURES/BENEFITS PAGE B7-3	HOW TO ORDER/NOMENCLATURE PAGE B7-5	EASY SELECTION PAGE B7-6	SELECTION/DIMENSIONS PAGE B7-44

RELATED PRODUCTS

Eccentric Collar Ball Bearings
BALL BEARING END COVERS FOR PILLOW BLOCKS & TAPPED BASE UNITS

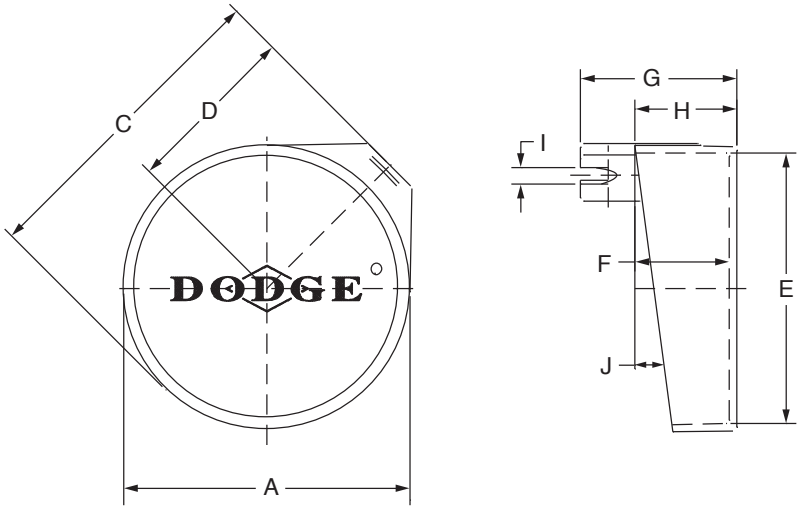

Series	Shaft Size*		Part Number	Description
	SXR, SXV	SXRH		
203	1/2 & 5/8 *17mm*	- - - - -	**128200**	EC-203-P
204	3/4 *20mm*	- - - - -	**128202**	EC-204-P
205	7/8 - 1 *25mm*	- - - - -	**128204**	EC-205-P
206	1-1/16 - 1-1/4 *30mm*	- - - - -	**128206**	EC-206-P
207	1-1/4 - 1-7/16 *35mm*	1-3/16 & 1-3/4 *30mm*	**128208**	EC-207-P
208	1-1/2 *40mm*	1-7/16 *35mm*	**128210**	EC-208-P
209	1-5/8 - 1-3/4 *45mm*	- - - - -	**128212**	EC-209-P
210	1-15/16 & 2 *50mm*	1-11/16 & 1-3/4 *45mm*	**128214**	EC-210-P
211	2 - 2-3/16 *55mm*	1-15/16 & 2 *50mm*	**128216**	EC-211-P
212	2-1/4 - 2-7/16 *60mm*	2-3/16 *55mm*	**128218**	EC-212-P

* NOTE: SXRH uses the next larger end cover. E.G. A P2B-SXRH-103 would use a EC-207-P

DODGE®



Eccentric Collar Ball Bearings
BALL BEARING END COVERS FOR PILLOW BLOCKS & TAPPED BASE UNITS

Series	Shaft Size		Weight *lbs* *gm*	A	C	D	E	F	G	H	I	J
	SXR, SXV	SXRH										
203	1/2 & 5/8 *17mm*	- - - - -	.02 *9*	1-25/32 *45.2*	2-7/64 *53.6*	1-3/32 *27.7*	1-41/64 *41.7*	49/64 *19.6*	1-29/64 *37.1*	29/32 *22.9*	1/4 *6.4*	9
204	3/4 *20mm*	- - - - -	.03 *14*	2-3/64 *52.0*	2-37/64 *65.3*	1-19/64 *33.0*	1-55/64 *47.2*	1-1/64 *25.7*	1-49/64 *45.0*	1-5/32 *29.5*	5/16 *7.9*	11
205	7/8 - 1 *25mm*	- - - - -	.05 *23*	2-3/8 *60.2*	2-13/16 *71.4*	1-3/16 *35.0*	2-5/32 *54.9*	1-1/16 *26.9*	1-7/8 *47.8*	1-7/32 *31.0*	11/32 *8.6*	9
206	1-1/16 - 1-1/4 *30mm*	- - - - -	.07 *34*	2-47/64 *69.3*	3-21/64 *84.3*	1-45/64 *43.2*	2-1/2 *63.5*	1-15/64 *31.5*	2-5/32 *54.9*	1-13/32 *35.6*	23/64 *8.9*	9
207	1-1/4 - 1-7/16 *35mm*	1-3/16 & 1-1/4 *30mm*	.11 *48*	3-1/4 *82.6*	3-51/64 *96.3*	1-29/32 *48.5*	3-1/64 *76.7*	1-5/16 *33.3*	2-11/32 *59.4*	1-31/64 *37.6*	3/8 *9.4*	7 30’
208	1-1/2 *40mm*	1-7/16 *35mm*	.13 *61*	3-3/8 *85.9*	4.0 *101.6*	2-1/16 *52.3*	3-7/64 *79.0*	1-19/64 *33.0*	2-13/32 *61.0*	1-1/2 *38.1*	27/64 *10.7*	6
209	1-5/8 - 1-3/4 *45mm*	- - - - -	.15 *69*	3-11/16 *93.7*	4-17/64 *108.2*	2-11/64 *55.1*	3-13/32 *86.6*	1-21/64 *33.8*	2-21/64 *59.2*	1-17/32 *38.9*	25/64 *9.9*	7
210	1-15/16 & 2 *50mm*	1-11/16 & 1-3/4 *45mm*	.17 *78*	3-7/8 *98.6*	4-1/2 *114.3*	2-19/32 *59.2*	3-37/64 *90.9*	1-23/64 *34.3*	2-1/2 *63.5*	1-9/16 *39.6*	31/64 *12.5*	9
211	2 - 2-3/16 *55mm*	1-15/16 & 2 *50mm*	.22 *102*	4-27/64 *112.3*	5-1/16 *128.5*	2-19/32 *66.0*	4-1/8 *104.7*	1-13/32 *35.8*	2-37/64 *65.3*	1-5/8 *41.2*	29/64 *11.4*	7
212	2-1/4 - 2-7/16 *60mm*	2-3/16 *55mm*	.26 *118*	4-59/64 *125.0*	5-29/64 *138.7*	2-3/4 *69.9*	4-39/64 *117.1*	1-17/32 *38.9*	2-11/16 *68.3*	1-3/4 *44.5*	13/32 *10.4*	8

For no-re-lube (-NL) applications, part number 430020, hex head plug is available

RELATED PRODUCTS

Eccentric Collar Ball Bearings

BALL BEARING END COVERS FOR MOUNTED UNITS OTHER THAN PILLOW BLOCKS & TAPPED BASE UNITS

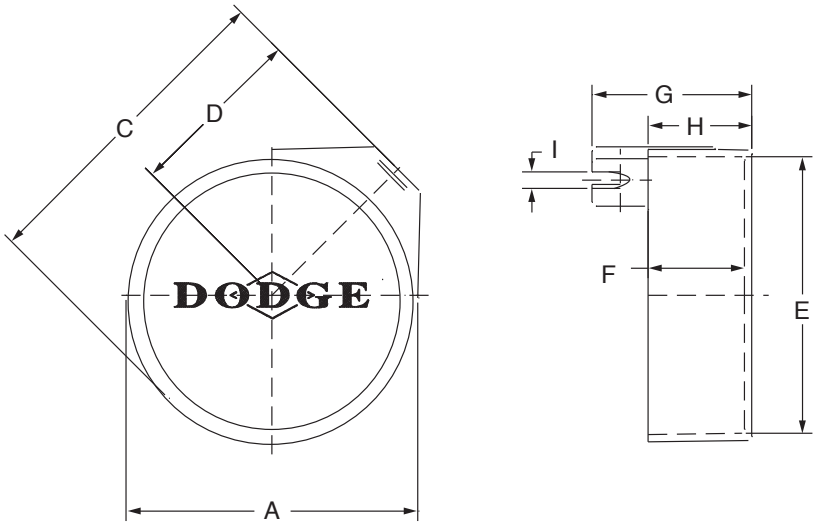

Series	Shaft Size* SXR, SXV	Part Number	Description
203	1/2 & 5/8 *17mm*	**128201**	EC-203-X
204	3/4 *20mm*	**128203**	EC-204-X
205	7/8 - 1 *25mm*	**128205**	EC-205-X
206	1-1/16 - 1-1/4 *30mm*	**128207**	EC-206-X
207	1-1/4 - 1-7/16 *35mm*	**128209**	EC-207-X
208	1-1/2 *40mm*	**128211**	EC-208-X
209	1-5/8 - 1-3/4 *45mm*	**128213**	EC-209-X
210	1-15/16 & 2 *50mm*	**128215**	EC-210-X
211	2 - 2-3/16 *55mm*	**128217**	EC-211-X
212	2-1/4 - 2-7/16 *60mm*	**128219**	EC-212-X

* NOTE: Above end covers will not fit the LF and LFT bearings



Eccentric Collar Ball Bearings

BALL BEARING END COVERS FOR MOUNTED UNITS OTHER THAN PILLOW BLOCKS & TAPPED BASE UNITS

Series	Shaft Size SXR, SXV	Weight *lbs* *gm*	A	C	D	E	F	G	H	I
203	1/2 & 5/8	0.02	1-51/64	2-13/64	1-3/16	1-41/64	51/64	1-29/64	15/16	1/4
	17mm	*10*	*45.5*	*56.1*	*30.2*	*41.7*	*20.3*	*37.1*	*23.9*	*6.4*
204	3/4	0.03	2-7/32	2-47/64	1-25/64	2-1/32	1-1/64	1-13/16	1-5/32	5/16
	20mm	*15*	*56.1*	*69.6*	*35.3*	*51.6*	*25.7*	*45.7*	*29.5*	*7.9*
205	7/8 - 1	0.05	2-3/8	3-3/64	1-19/32	2-5/32	1-1/64	1-53/64	1-11/64	11/32
	25mm	*24*	*60.2*	*77.2*	*40.6*	*54.9*	*25.7*	*46.5*	*29.7*	*8.7*
206	1-1/16 - 1-1/4	0.08	2-47/64	3-21/64	1-45/64	2-1/2	1-3/16	2-1/16	1-23/64	23/64
	30mm	*36*	*69.3*	*84.3*	*43.2*	*63.5*	*30.2*	*52.3*	*34.5*	*8.9*
207	1-1/4 - 1-7/16	0.12	3-1/4	3-27/32	1-31/32	3-1/64	1-11/32	2-11/32	1-17/32	3/8
	35mm	*53*	*82.6*	*97.5*	*50.0*	*76.7*	*34.5*	*59.4*	*38.9*	*9.4*
208	1-1/2	0.14	3-3/8	4.0	2-1/16	3-7/64	1-19/64	2-13/32	1-1/2	27/64
	40mm	*64*	*85.9*	*101.6*	*52.3*	*79.0*	*33.0*	*61.0*	*38.1*	*10.7*
209	1-5/8 - 1-3/4	0.16	3-11/16	4-17/64	2-11/64	3-13/32	1-23/64	2-21/64	1-17/32	25/64
	45mm	*73*	*93.7*	*108.2*	*55.1*	*86.6*	*34.3*	*59.2*	*38.9*	*9.9*
210	1-15/16 & 2	0.18	3-7/8	4-1/2	2-21/64	3-9/16	1-23/64	2-33/64	1-9/16	31/64
	50mm	*82*	*98.6*	*114.3*	*59.2*	*90.9*	*34.3*	*63.8*	*39.6*	*12.4*
211	2 - 2-3/16	0.24	4-27/64	5-1/16	2-19/32	4-1/8	1-29/64	2-37/64	1-21/32	29/64
	55mm	*108*	*112.3*	*128.5*	*66.0*	*104.7*	*36.8*	*65.3*	*42.2*	*11.4*
212	2-1/4 - 2-7/16	0.27	4-59/64	5-15/32	2-3/4	4-39/64	1-35/64	2-11/16	1-3/4	13/32
	60mm	*124*	*125.0*	*138.7*	*69.9*	*117.1*	*39.1*	*68.3*	*44.5*	*10.4*

FEATURES/BENEFITS PAGE B7-3	HOW TO ORDER/NOMENCLATURE PAGE B7-5	EASY SELECTION PAGE B7-6	SELECTION/DIMENSIONS PAGE B7-44

RELATED PRODUCTS

Eccentric Collar Ball Bearings

BALL BEARING END COVERS FOR MOUNTED UNITS 214 SERIES & LARGER

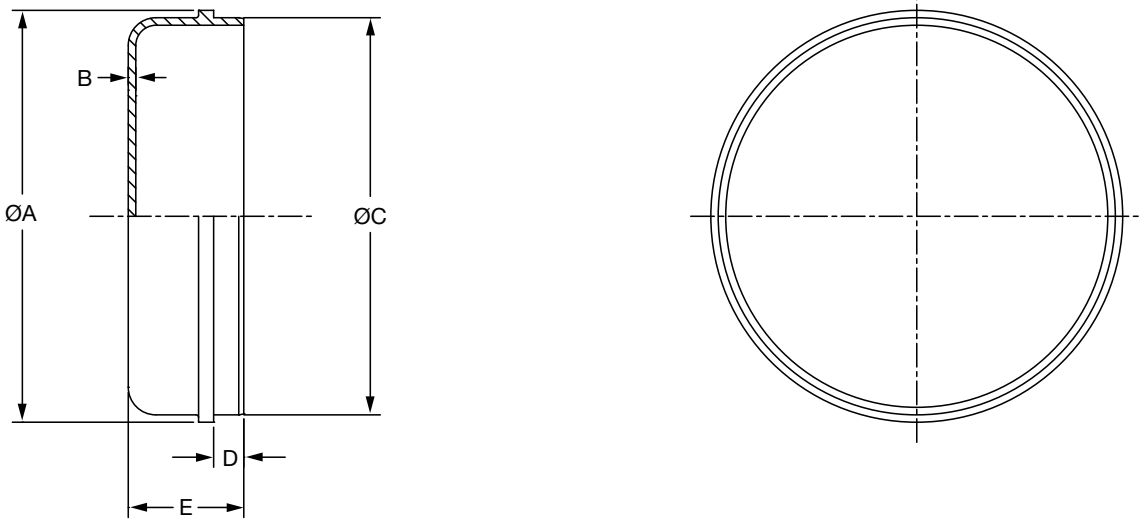

Series	Shaft Size SXR, SXV	Part Number	Description
214	2-1/2 & 2-11/16 *70mm*	**480037**	EC-080
215	2-15/16 *75mm*	**480455**	EC-090
216	- - - - -	**480456**	EC-100
218	- - - - -	**480457**	EC-218

Series	Shaft Size SXR, SXV	Weight *lbs* *gm*	A	B	C	D	E
214	2-1/2 & 2-11/16 *70mm*	0.33 *151*	4-15/16 *125.4*	3/32 *2.4*	4.741/4.737 *120.4/120.3*	3/16 *4.8*	1-13/32 *35.7*
215	2/15/16 *75mm*	0.36 *154*	5-1/8 *130.2*	3/32 *2.4*	4.944/4.940 *125.6/125.5*	3/8 *9.5*	1-7/16 *36.5*
216	- - - - -	0.44 *201*	5-9/16 *141.3*	3/32 *2.4*	5.350/5.346 *135.9/135.8*	9/32 *7.1*	1-7/16 *36.5*
218	- - - - -	0.57 *257*	6-5/16 *160.3*	3/32 *2.4*	6.100/6.096 *154.9/154.8*	3/8 *9.5*	1-9/16 *39.7*

NOTE: WILL NOT WORK WITH PILLOW-BLOCK HOUSINGS

CONTENTS

Setscrew VSC Ball Bearings

Features / Benefits B8-2
How to Order/Nomenclature B4-5
Selection B8-3
Selection/Dimensions B8-8
Modification/Accessories B8-26
Part Number Index INDEX-1
Key Word Index INDEX-69

FEATURES/BENEFITS

Setscrew VSC Ball Bearings

- 65° Setscrew
- Wide Inner Ring Design NEW!
- Fiberglass Reinforced Nylon Cage
- Grade 10 Balls
- ProGuard Single Lip Seal
- No Groove in Housing for End Cover
- Mulitple Housing Styles Available
  - P2B, F2B, F4B,WSTU, NSTU
- Bore Range
  - 1/2" To 2-3/16"
  - 20mm to 55mm

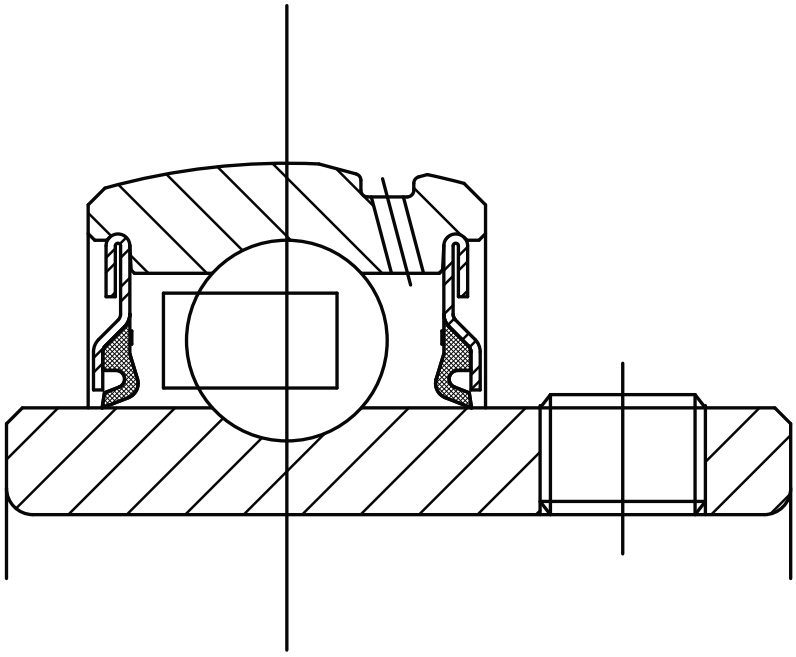

Note: Instruction manuals and drawings for Dodge are available on **www.dodge-pt.com**

DODGE®



Setscrew VSC Ball Bearings

Recommended Torque													
Setscrews					D-LOK			Mounting Bolts					
		◆ Recommended Torque						Metal Housings		EZ-KLEEN Housed Bearings			
Setscrew Size	Key Hex Across Flats	Standard Ball Bearing Insert		Corrosion Resistant Stainless Steel	Cap Screw Size	Recom. Torque	EZ-KLEEN Recom. Torque	Bolt Size	Recom. Dry Torque (Grade 2)	2-Bolt PB, 2 & 4 Bolt Fig. and Flg. Brackets		Tapped Base PB	
		Min	Max							Bolt Size	Torque ①	Bolt Size	Torque ②
(in.)	(in.)	(in-lbs.)	(in.-lbs.)	(in.-lbs.)	(in.)	(in.0lbs.)	(in.-lbs.)	(in.)	(in.0lbs.)	(in.)	(in.-lbs.)	(in.)	(in.lbs.)
#10	3/32	28	33	25	#8-32	58	46	3/8-16	240	3/8-16	225	3/8-16	175
1/4	1/8	66	80	60	#10-32	90	72	7/16-14	384	7/16-14	350	7/16-14	350
5/16	5/32	126	156	117	1/4-28	180	144	1/2-13	600	1/2-13	500	1/2-13	400
3/8	3/16	228	275	206	5/16-24	400	320	5/8-11	1200	9/16-12	650		
7/16	7/32	342	428	321	3/8-24	750	600	3/4-10	1950	5/8-11	1000		
								7/8-9	2890				
(mm)	(mm)	(N-m)	(N-m)	(N-m)	(mm)	(N-m)	(N-m)	(mm)	(N-m)	(mm)	(N-m)	①Torque for Austenitic (18-8) Stainless ②Max. torque values published. Do not exceed	
M5	2.5	3.2	3.7	2.8	M4	585	4.68	M10	29	M8	15		
M6	3	6.2	7.7	5.8	M5	10.75	8.6	M12	50	M10	25		
M8	4	14.2	17.8	13.4	M6	20.5	16.4	M16	124	M12	50		
M10	5	26	31	23	M8	45	36	M20	238	M14	75		
M12	6	46	57	43				M22	322	M18	125		

Lubrication

High Speed Operation - In the higher speed ranges, too much grease will cause over-heating. The amount of grease that the bearing will take for a particular high speed application can only be determined by experience. If excess grease in the bearing causes overheating, it will be necessary to remove grease fitting to permit excess grease to escape. The bearing has been greased at the factory and is ready to run. When establishing a relubrication schedule, note that a small amount of grease at frequent intervals is preferable to a large amount at infrequent intervals.

◆ **Note:** Dodge does not recommend the use of oils or locking agents on setscrew threads. However, if utilized, the minimum installation torque values should be followed.

Lubrication Guide

Use a No. 2 Lithium complex base grease or equivalent*

Hours Run per Day	Suggested Lubrication Period in Weeks							
	1 to 250 RPM	251 to 500 RPM	501 to 750 RPM	751 to 1000 RPM	1001 to 1500 RPM	1501 to 2000 RPM	2001 to 2500 RPM	2501 to 3000 RPM
8	12	12	10	7	5	4	3	2
16	12	7	5	4	2	2	1	1
24	10	5	3	2	1	1	1	1

* For EZ-KLEEN series bearings, use an aluminum complex base grease.

Lubrication recommendations are intended for standard products applied in general operating conditions. For modified products, high temperature applications, and other anomalous applications contact product engineering at 864-284-5700.

Note: Bearing analysis program "BEST" is available on www.ptwizard.com

SELECTION



Setscrew VSC Ball Bearings Inch

Table 2: Easy Selection Table For Ball Bearing Mounted Units

Ring Size	Shaft Size SC, VSC, SL, CC	Shaft Size SCM	Dynamic Capacity C, Lbs.	Static Capacity Co, Lbs.	L_{10} LIFE HOURS	Allowable Equivalent Radial Load Rating (Lbs.) At Various Rpm* 50	150	250	500	750	1000	1500	1750	2000
203	1/2 5/8		2158	1079	20000	550	380	320	255	225	205	175	170	160
					30000	**480**	**335**	**280**	**225**	**195**	**175**	**155**	**145**	**140**
					40000	440	305	255	205	175	160	140	135	130
					60000	380	265	225	175	155	140	125	115	110
					100000	320	225	190	150	130	120	105	100	95
204	1/2 5/8 3/4 13/16		2899	1482	20000	740	515	435	345	300	275	240	225	215
					30000	**645**	**450**	**380**	**300**	**260**	**240**	**210**	**200**	**190**
					40000	590	410	345	275	240	215	190	180	170
					60000	515	355	300	240	210	190	165	155	150
					100000	435	300	255	200	175	160	140	130	125
205	7/8 15/16 1		3146	1769	20000	805	560	470	375	325	295	260	245	235
					30000	**705**	**485**	**410**	**325**	**285**	**260**	**225**	**215**	**205**
					40000	640	445	375	295	260	235	205	195	185
					60000	560	385	325	260	225	205	180	170	165
					100000	470	325	275	220	190	175	150	145	135
206	1-1/16 1-1/8 1-3/16 1-1/4	1	4368	2538	20000	1115	775	655	520	455	410	360	340	325
					30000	**975**	**675**	**570**	**455**	**395**	**360**	**315**	**300**	**285**
					40000	885	615	520	410	360	325	285	270	260
					60000	775	535	455	360	315	285	250	235	225
					100000	655	455	380	305	265	240	210	200	190
207	1-1/4 1-5/16 1-3/8 1-7/16	1-3/16 1-1/4	5759	3461	20000	1475	1020	860	685	595	545	475	450	430
					30000	**1285**	**890**	**755**	**595**	**520**	**475**	**415**	**395**	**375**
					40000	1170	810	685	545	475	430	375	355	340
					60000	1020	710	595	475	415	375	330	310	300
					100000	860	595	505	400	350	315	275	265	250
208	1-1/2 1-5/8	1-7/16 1 -1/2**	7332	4475	20000	1875	1300	1095	870	760	690	605	575	550
					30000	**1640**	**1135**	**960**	**760**	**665**	**605**	**525**	**500**	**480**
					40000	1490	1030	870	690	605	550	480	455	435
					60000	1300	900	760	605	525	480	420	400	380
					100000	1095	760	640	510	445	405	355	335	320
209	1-5/8 1-11/16 1-3/4	1-1/2	7891	4906	20000	2020	1400	1180	935	820	745	650	615	590
					30000	**1765**	**1225**	**1030**	**820**	**715**	**650**	**570**	**540**	**515**
					40000	1600	1110	935	745	650	590	515	490	470
					60000	1400	970	820	650	570	515	450	430	410
					100000	1180	820	690	550	480	435	380	360	345
210	1-15/16 2	1-11/16 1-3/4	7891	5213	20000	2020	1400	1180	935	820	745	650	615	590
					30000	**1765**	**1225**	**1030**	**820**	**715**	**650**	**570**	**540**	**515**
					40000	1600	1110	935	745	650	590	515	490	470
					60000	1400	970	820	650	570	515	450	430	410
					100000	1180	820	690	550	480	435	380	360	345
211	2 2-3/16 2-1/4	1-15/16 2	9755	6588	20000	2491	1727	1457	1156	1010	918	802	761	729
					30000	**2176**	**1509**	**1272**	**1010**	**882**	**802**	**700**	**665**	**636**
					40000	1977	1371	1156	918	802	728	636	604	578
					60000	1727	1197	1010	802	700	636	556	528	505
					100000	1457	1010	852	676	591	537	469	445	426
212	2-1/4 2-7/16	2-3/16 2-1/4	11791	8100	20000	3015	2090	1765	1400	1225	1110	970	925	880
					30000	**2635**	**1825**	**1540**	**1225**	**1070**	**970**	**880**	**805**	**770**
					40000	2395	1660	1400	1110	970	880	770	730	700
					60000	2090	1450	1225	970	850	770	675	640	610
					100000	1765	1225	1030	820	715	650	570	540	515
214	2 11/16	2-7/16 2-1/2	13995	9838	20000	3580	2480	2095	1660	1450	1320	1155	1095	1045
					30000	**3125**	**2170**	**1830**	**1450**	**1270**	**1155**	**1005**	**955**	**915**
					40000	2840	1970	1660	1320	1155	1045	915	870	830
					60000	2480	1720	1450	1155	1005	915	800	760	725
					100000	2095	1450	1225	970	850	770	675	640	615
215	2-15/16	2-11/16	14872	11108	20000	3805	2640	2225	1765	1545	1400	1225	1165	1115
					30000	**3325**	**2305**	**1945**	**1545**	**1350**	**1225**	**1070**	**1015**	**975**
					40000	3020	2095	1765	1400	1225	1115	975	925	885
					60000	2640	1830	1545	1225	1070	975	850	805	770
					100000	2225	1545	1300	1035	905	820	715	680	650
216		2-15/16 3	17407	13102	20000	4450	3085	2605	2065	1805	1640	1435	1360	1300
					30000	**3890**	**2695**	**2275**	**1805**	**1580**	**1435**	**1250**	**1190**	**1140**
					40000	3535	2450	2065	1640	1435	1300	1140	1080	1035
					60000	3085	2140	1805	1435	1250	1140	995	945	905
					100000	2605	1805	1525	1210	1055	960	840	795	760
218		3-7/16 3-1/2	21451	16641	20000	5485	3805	3210	2550	2225	2025	1765	1680	1605
					30000	**4795**	**3325**	**2805**	**2225**	**1945**	**1765**	**1545**	**1465**	**1405**
					40000	4355	3020	2550	2025	1765	1605	1405	1335	1276
					60000	3805	2640	2225	1765	1545	1405	1225	1165	1115
					100000	3210	2225	1880	1490	1300	1185	1035	980	940

* Slight interference fit required when operating on the right of the heavy line or in the shaded area ** Piloted flange only

Note: Bearing analysis program "BEST" is available on www.ptwizard.com



Setscrew VSC Ball Bearings Inch

Table 2 (continued): Easy Selection Table for Ball Bearing Mounted Units

Ring Size	Shaft Size SC, VSC, SL, CC	Shaft Size SCM	Dynamic Capacity C, Lbs.	Static Capacity Co, Lbs.	L_{10} LIFE HOURS	Allowable Equivalent Radial Load Rating (Lbs.) At Various Rpm* 50	150	250	500	750	1000	1500	1750	2000
203	1/2 5/8		2158	1079	20000	150	140	135	130	125	120	115	110	105
					30000	**130**	**125**	**115**	**110**	**105**	**105**	**100**	**95**	**90**
					40000	120	110	105	100	95	95	90	85	80
					60000	105	95	95	90	85	80	80	75	70
					100000	85	80	80	75	70	70	65	65	60
204	1/2 5/8 3/4 13/16		2899	1482	20000	200	190	180	170	165	160	155	145	140
					30000	**175**	**165**	**155**	**150**	**145**	**140**	**135**	**130**	**120**
					40000	160	150	145	135	130	125	125	115	110
					60000	140	130	125	120	115	110	105	100	95
					100000	115	110	105	100	90	95	90	85	80
205	7/8 15/16 1		3146	1769	20000	220	205	195	185	180	175	170	160	150
					30000	**190**	**180**	**170**	**165**	**155**	**150**	**145**	**140**	**130**
					40000	175	165	155	150	140	135	135	125	120
					60000	150	140	135	130	125	120	115	110	105
					100000	125	120	115	110	105	100	100	95	90
206	1-1/16 1-1/8 1-3/16 1-1/4	1	4368	2538	20000	305	285	270	260	250	240	235	200	
					30000	**265**	**250**	**235**	**225**	**220**	**210**	**205**	**195**	
					40000	240	225	215	205	200	190	185	175	
					60000	210	200	190	180	175	165	160	155	
					100000	175	165	160	150	145	140	135	130	
207	1-1/4 1-5/16 1-3/8 1-7/16	1-3/16 1-1/4	5759	3461	20000	400	375	355	340	330	315	305		
					30000	**350**	**330**	**310**	**300**	**285**	**275**	**270**		
					40000	315	300	285	270	260	250	245		
					60000	275	260	250	235	230	220	125		
					100000	235	220	210	200	190	185	180		
208	1-1/2 1-5/8	1-7/16 1 -1/2**	7332	4475	20000	510	480	455	435	420	405			
					30000	**445**	**420**	**400**	**380**	**365**	**355**			
					40000	405	380	360	345	330	320			
					60000	355	330	315	300	290	280			
					100000	300	280	265	255	245	235			
209	1-5/8 1-11/16 1-3/4	1-1/2	7891	4906	20000	550	515	490	470	450	435			
					30000	**480**	**450**	**430**	**410**	**395**	**380**			
					40000	435	410	390	370	360	345			
					60000	380	360	340	325	310	300			
					100000	320	300	285	275	265	255			
210	1-15/16 2	1-11/16 1-3/4	7891	5213	20000	550	515	490	470	450				
					30000	**480**	**450**	**430**	**410**	**395**				
					40000	435	410	390	370	360				
					60000	380	360	340	325	310				
					100000	320	300	285	275	265				
211	2 2-3/16 2-1/4	1-15/16 2	9755	6588	20000	676	636	604	578					
					30000	**591**	**556**	**528**	**505**					
					40000	537	505	480	459					
					60000	469	441	419	401					
					100000	395	372	353	338					
212	2-1/4 2-7/16	2-3/16 2-1/4	11791	8100	20000	820	770	730						
					30000	**715**	**675**	**640**						
					40000	650	610	580						
					60000	570	535	510						
					100000	480	450	430						
214	2 11/16	2-7/16 2-1/2	13995	9838	20000	970	915							
					30000	**850**	**800**							
					40000	770	725							
					60000	675	635							
					100000	570	535							
215	2-15/16	2-11/16	14872	11108	20000	1035	975							
					30000	**905**	**850**							
					40000	820	770							
					60000	715	675							
					100000	605	570							
216		2-15/16 3	17407	13102	20000	1210								
					30000	**1055**								
					40000	960								
					60000	840								
					100000	705								
218		3-7/16 3-1/2	21451	16641	20000									
					30000									
					40000									
					60000									
					100000									

* Slight interference fit required when operating on the right of the heavy line or in the shaded area ** Piloted flange only

Note: Bearing analysis program "BEST" is available on www.ptwizard.com

FEATURES/BENEFITS PAGE B8-2	HOW TO ORDER/NOMENCLATURE PAGE B4-5	SELECTION/DIMENSIONS PAGE B8-8	ACCESSORIES PAGE B8-26

SELECTION



Setscrew VSC Ball Bearings Inch

Table 2 (continued): Easy Selection Table for Ball Bearing Mounted Units

Ring Size	Shaft Size		Dynamic Capacity C, N.	Static Capacity Co, N.	L_{10} Life Hours	Allowable Equivalent Radial Load Rating (N.) At Various Rpm*								
	SC, VSC, SL, CC	SCM				50	150	250	500	750	1000	1500	1750	2000
203	17mm		9600	4800	20000	2446	1690	1423	1134	1001	912	778	756	712
					30000	2135	1490	1245	1001	867	778	689	645	623
					40000	1957	1357	1134	912	778	712	623	600	578
					60000	1690	1179	1001	778	689	623	556	512	489
					100000	1423	1001	845	667	578	534	467	445	423
204	20mm		12895	6592	20000	3292	2291	1935	1535	1334	1223	1068	1001	956
					30000	2869	2002	1690	1334	1156	1068	934	890	845
					40000	2624	1824	1535	1223	1068	956	845	801	756
					60000	2291	1579	1334	1068	934	845	734	689	667
					100000	1935	1334	1134	890	778	712	623	578	556
205	25mm		13995	7869	20000	3581	2491	2091	1668	1446	1312	1156	1090	1045
					30000	3136	2157	1824	1446	1268	1156	1001	956	912
					40000	2847	1979	1668	1312	1156	1045	912	867	823
					60000	2491	1712	1446	1156	1001	912	801	756	734
					100000	2091	1446	1223	979	845	778	667	645	600
206	30mm	25mm	18993	11,290	20000	4960	3447	2913	2313	2024	1824	1601	1512	1446
					30000	4337	3002	2535	2024	1757	1601	1401	1334	1268
					40000	3936	2736	2313	1824	1601	1446	1268	1201	1156
					60000	3447	2380	2024	1601	1401	1268	1112	1045	1001
					100000	2913	2024	1690	1357	1179	1068	934	890	845
207	35mm	30mm	25628	15,395	20000	6561	4537	3825	3047	2647	2424	2113	2002	1913
					30000	5716	3959	3358	2674	2313	2113	1846	1757	1668
					40000	5204	3603	3047	2424	2113	1913	1668	1579	1512
					60000	4537	3158	2647	2113	1846	1669	1468	1379	1334
					100000	3825	2647	2246	1779	1557	1401	1223	1179	1112
208	40mm	35mm	32627	19,906	20000	8340	5782	4871	3870	3380	3069	2691	2558	2446
					30000	7295	5048	4270	3380	2958	2691	2335	2224	2135
					40000	6628	4581	3870	3069	2691	2446	2135	2024	1935
					60000	5782	4003	3380	2691	2335	2135	1868	1779	1690
					100000	4871	3380	2847	2268	1979	1801	1579	1490	1423
209	45mm	40mm	35115	21,823	20000	8985	6227	5249	4159	3647	3314	2891	2736	2624
					30000	7851	5449	4581	3649	3180	2891	2535	2402	2291
					40000	7117	4937	4159	3314	2891	2624	2291	2180	2091
					60000	6227	4315	3647	2891	2535	2291	2002	1913	1824
					100000	5249	3647	3069	2446	2135	1935	1690	1601	1535
210	50mm	45mm	35115	23,189	20000	8985	6227	5249	4159	3647	3314	2891	2736	2624
					30000	7851	5449	4581	3647	3180	2891	2535	2402	2291
					40000	7117	4937	4159	3314	2891	2624	2291	2180	2091
					60000	6227	4315	3647	2891	2535	2291	2002	1913	1824
					100000	5249	3647	3069	2446	2135	1935	1690	1601	1535
211	55mm	50mm	43394	29,305	20000	11079	7682	6479	5142	4492	4082	3566	3387	3241
					30000	9678	6711	5660	4492	3924	3566	3115	2959	2831
					40000	8793	6097	5142	4082	3566	3240	2830	2688	2572
					60000	7682	5326	4492	3566	3115	2830	2472	2348	2247
					100000	6479	4492	3789	3007	2627	2387	2085	1981	1895
212	60mm	55mm	52470	36,031	20000	13411	9296	7851	6227	5449	4937	4315	4114	3914
					30000	11720	8118	6850	5449	4759	4315	3914	3581	3425
					40000	10653	7384	6227	4937	4315	3914	3425	3247	3114
					60000	9296	6450	5449	4315	3781	3425	3002	2847	2713
					100000	7851	5449	4581	3647	3180	2891	2535	2402	2291
214	70mm	65mm	62278	43,762	20000	15924	11031	9319	7384	6450	5871	5137	4871	4648
					30000	13900	9672	8140	6450	5649	5137	4470	4248	4070
					40000	12632	8763	7384	5871	5137	4648	4070	3870	3692
					60000	11031	7651	6450	5137	4470	4070	3558	3380	3225
					100000	9319	6450	5449	4315	3781	3425	3002	2847	2736
215	75mm	70mm	66180	49,411	20000	16925	11743	9897	7851	6872	6227	5449	5182	4960
					30000	14790	10253	8651	6872	6005	5449	4759	4515	4337
					40000	13433	9319	7851	6227	5449	4960	4337	4114	3936
					60000	11743	8140	6872	5449	4759	4337	3781	3581	3425
					100000	9897	6872	5782	4604	4025	3647	3180	3025	2891
216		75mm	77426	58,281	20000	19794	13722	11587	9185	8029	7295	6383	6049	5782
					30000	17303	11987	10119	8029	7028	6383	5560	5293	5071
					40000	15724	10898	9185	7295	6383	5782	5071	4804	4604
					60000	13722	9519	8029	6393	5560	5071	4426	4203	4025
					100000	11587	8029	6783	5382	4693	4270	3736	3536	3380
218		85mm	95371	74,023	20000	24397	16925	14278	11342	9897	9007	7851	7473	7139
					30000	21328	14790	12477	9897	8651	7851	6872	6516	6249
					40000	19371	13433	11342	9007	7851	7139	6249	5938	5676
					60000	16925	11743	9897	7851	6872	6249	5449	5182	4960
					100000	14278	9897	8362	6628	5782	5271	4604	4359	4181

* Slight interference fit required when operating on the right of the heavy line or in the shaded area

Note: Bearing analysis program "BEST" is available on www.ptwizard.com

FEATURES/BENEFITS PAGE B8-2	HOW TO ORDER/NOMENCLATURE PAGE B4-5	SELECTION/DIMENSIONS PAGE B8-8	ACCESSORIES PAGE B8-26

DODGE®



Setscrew VSC Ball Bearings Inch

Table 2 (continued): Easy Selection Table for Ball Bearing Mounted Units

Ring Size	Shaft Size SC, VSC, SL, C	Shaft Size SCM	Dynamic Capacity C, N.	Static Capacity Co, N.	L_{10} Life Hours	Allowable Equivalent Radial Load Rating (N.) At Various Rpm* 2500	3000	3500	4000	4500	5000	5500	6500	7500
203	17mm		9600	4800	20000	667	623	600	578	556	534	512	489	467
					30000	578	556	512	489	467	467	445	423	400
					40000	534	489	467	445	423	423	400	378	356
					60000	467	423	423	400	378	356	358	334	311
					100000	378	356	356	334	311	311	289	289	267
204	20mm		12895	6592	20000	890	845	801	756	734	712	689	645	623
					30000	778	724	689	667	645	623	600	578	534
					40000	712	667	645	600	578	556	556	512	489
					60000	623	578	556	534	512	489	467	445	423
					100000	512	489	467	445	400	423	400	378	356
205	25mm		13995	7869	20000	979	912	867	823	801	778	756	712	667
					30000	845	801	756	734	689	667	645	623	578
					40000	778	734	689	667	623	600	600	556	534
					60000	667	623	600	578	556	534	512	489	467
					100000	556	534	512	489	467	445	445	423	400
206	30mm	25mm	18993	11,290	20000	1357	1268	1201	1156	1112	1068	1045	979	
					30000	1179	1112	1045	1001	979	934	912	867	
					40000	1068	1001	958	912	890	845	823	778	
					60000	934	890	845	801	778	734	712	689	
					100000	778	734	712	667	645	623	600	578	
207	35mm	30mm	25628	15,395	20000	1779	1668	1579	1512	1468	1401	1357		
					30000	1557	1468	1379	1134	1268	1223	1201		
					40000	1401	1334	1268	1201	1156	1112	1090		
					60000	1223	1156	1112	1045	1023	979	956		
					100000	1045	979	934	890	845	823	801		
208	40mm	35mm	32627	19,906	20000	2268	2135	2024	1935	1868	1801			
					30000	1979	1868	1779	1690	1624	1579			
					40000	1801	1690	1601	1535	1468	1423			
					60000	1576	1468	1401	1334	1290	1245			
					100000	1334	1245	1179	1134	1090	1045			
209	45mm	40mm	35115	21,823	20000	2446	2291	2180	2091	2002	1935			
					30000	2135	2002	1913	1824	1757	1690			
					40000	1935	1824	1735	1646	1601	1535			
					60000	1690	1601	1512	1446	1379	1334			
					100000	1423	1334	1268	1223	1179	1134			
210	50mm	45mm	35115	23,189	20000	2446	2291	2180	2091	2002				
					30000	2135	2002	1913	1824	1757				
					40000	1935	1824	1735	1646	1601				
					60000	1690	1601	1512	1446	1379				
					100000	1423	1334	1268	1223	1179				
211	55mm	50mm	43394	29,305	20000	3007	2830	2688	2571					
					30000	2627	2472	2348	2246					
					40000	2387	2246	2134	2041					
					60000	2085	1962	1864	1783					
					100000	1759	1655	1572	1504					
212	60mm	55mm	52470	36,031	20000	3647	3425	3247						
					30000	3180	3002	2847						
					40000	2891	2713	2580						
					60000	2535	2380	2268						
					100000	2135	2002	1913						
214	70mm	65mm	62278	43,762	20000	4315	4070							
					30000	3781	3558							
					40000	3425	3225							
					60000	3002	2824							
					100000	2535	2380							
215	75mm	70mm	66180	49,411	20000	4604	4337							
					30000	4025	3781							
					40000	3647	3425							
					60000	3180	3002							
					100000	2691	2535							
216		75mm	77426	58,281	20000	5382								
					30000	4693								
					40000	4270								
					60000	3736								
					100000	3136								
218		85mm	95371	74,023	20000									
					30000									
					40000									
					60000									
					100000									

* Slight interference fit required when operating on the right of the heavy line or in the shaded area

Note: Bearing analysis program "BEST" is available on www.ptwizard.com

FEATURES/BENEFITS PAGE B8-2	HOW TO ORDER/NOMENCLATURE PAGE B4-5	SELECTION/DIMENSIONS PAGE B8-8	ACCESSORIES PAGE B8-26

SELECTION/DIMENSIONS

Setscrew VSC Ball Bearings
VSC AND VSCU INTERMEDIATE DUTY PILLOW BLOCKS

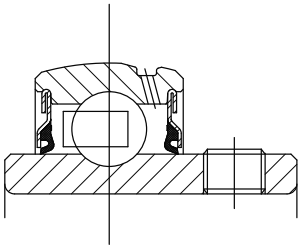

Lube Fitting
203 series - 1/4-28 tapered thread
204 series and larger - 1/8-27 NPT

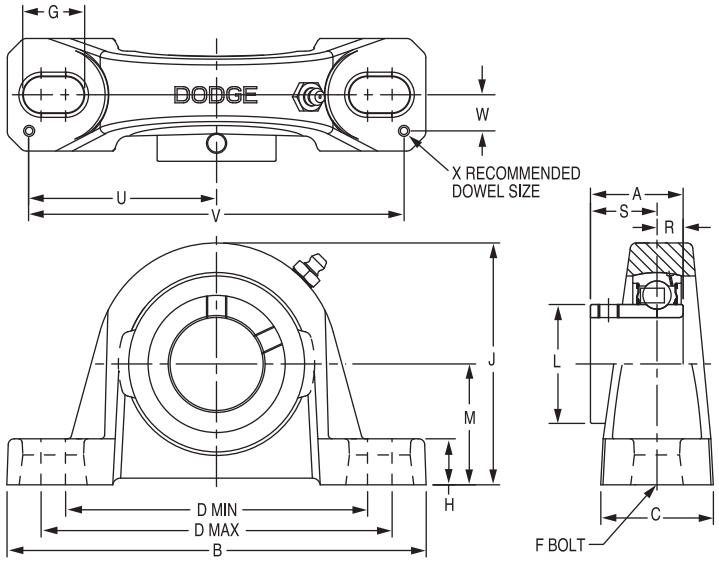

Series	Shaft Size	Standard		No-Lube/Sealed for Life (-NL)	
		Part No.	Description	Part No.	Description
203	1/2	**125500**	P2B-VSC-008	**049887**	P2B-VSC-008-NL
	5/8	**125501**	P2B-VSC-010	**@**	P2B-VSC-010-NL
	17mm	***@***	*P2B-VSC-17M*	***@***	*P2B-VSC-17M-NL*
203 (VSCU)	1/2	**125513**	P2B-VSCU-008	**@**	P2B-VSCU-008-NL
	5/8	**125514**	P2B-VSCU-010	**@**	P2B-VSCU-010-NL
	17mm	***125685***	*P2B-VSCU-17M*	***@***	*P2B-VSCU-17M-NL*
204	3/4	**123580**	P2B-VSC-012	**054495**	P2B-VSC-012-NL
	20mm	***125686***	*P2B-VSC-20M*	***@***	*P2B-VSC-20M-NL*
205	7/8	**125502**	P2B-VSC-014	**@**	P2B-VSC-014-NL
	15/16	**125503**	P2B-VSC-015	**@**	P2B-VSC-015-NL
	1	**123581**	P2B-VSC-100	**123590**	P2B-VSC-100-NL
	25mm	***125687***	*P2B-VSC-25M*	***@***	*P2B-VSC-25M-NL*
206	1-1/8	**125504**	P2B-VSC-102	**@**	P2B-VSC-102-NL
	1-3/16	**123582**	P2B-VSC-103	**064691**	P2B-VSC-103-NL
	1-1/4	**123589**	P2B-VSC-104S	**@**	P2B-VSC-104S-NL
	30mm	***125751***	*P2B-VSC-30M*	***@***	*P2B-VSC-30M-NL*
206 (VSCU)	1-1/8	**125515**	P2B-VSCU-102	**@**	P2B-VSCU-102-NL
	1-3/16	**123604**	P2B-VSCU-103	**050845**	P2B-VSCU-103-NL
	1-1/4	**123606**	P2B-VSCU-104S	**@**	P2B-VSCU-104S-NL
	30mm	***125688***	*P2B-VSCU-30M*	***@***	*P2B-VSCU-30M-NL*

@Assembled to order



Setscrew VSC Ball Bearings

VSC AND VSCU INTERMEDIATE DUTY PILLOW BLOCKS

Series	Shaft Size	Weight lbs. *kgs.*	A	B	C	D		F Bolt Dia.	G	H	J	L	M	R	S	U	V	W	X
						Min.	Max.												
203	1/2	1.1	1.00	5.00	1.20	3.25	4.06	3/8	0.84	0.47	2.14	0.96	1.06	0.36	0.64	2.25	4.50	0.38	0.12
	5/8	1.0																	
	17mm	*0.5*	*25.4*	*127.0*	*30.5*	*82.6*	*103.1*	*M10*	*21.3*	*11.9*	*54.4*	*24.4*	*26.9*	*9.1*	*16.3*	*57.2*	*114.3*	*9.7*	*3.0*
203 (VSCU)	1/2	1.2	1.00	5.00	1.20	3.25	4.06	3/8	0.84	0.59	2.27	0.96	1.19	0.36	0.64	2.25	4.50	0.38	0.12
	5/8	1.1																	
	17mm	*0.6*	*25.4*	*127.0*	*30.5*	*82.6*	*103.1*	*M10*	*21.3*	*15.0*	*57.7*	*24.4*	*30.2*	*9.1*	*16.3*	*57.2*	*114.3*	*9.7*	*3.0*
204	3/4	1.4	1.23	5.25	1.34	3.38	4.19	3/8	0.85	0.53	2.56	1.12	1.31	0.50	0.73	2.25	4.50	0.50	0.12
	20mm	*0.6*	*31.2*	*133.4*	*34.0*	*85.9*	*106.4*	*M10*	*21.6*	*13.5*	*65.0*	*28.4*	*33.3*	*12.7*	*18.5*	*57.2*	*114.3*	*12.7*	*3.0*
205	7/8	1.8	1.34	5.50	1.40	3.69	4.50	3/8	0.85	0.58	2.77	1.32	1.44	0.56	0.78	2.50	5.00	0.50	0.12
	15/16	1.7																	
	1	1.6																	
	25mm	*0.8*	*34.0*	*139.7*	*35.6*	*93.7*	*114.3*	*M10*	*21.6*	*14.7*	*70.4*	*33.5*	*36.6*	*14.2*	*19.8*	*63.5*	*127.0*	*12.7*	*3.0*
206	1-1/8	2.7	1.52	6.25	1.75	4.25	5.00	1/2	0.94	0.68	3.25	1.57	1.63	0.58	0.94	2.88	5.76	0.56	0.12
	1-3/16	2.6																	
	1-1/4	2.5																	
	30mm	*1.2*	*38.6*	*158.8*	*44.5*	*108.0*	*127.0*	*M12*	*23.9*	*17.3*	*82.6*	*39.9*	*41.4*	*14.7*	*23.9*	*73.2*	*146.3*	*14.2*	*3.0*
206 (VSCU)	1-1/8	2.8	1-19/64	6-1/4	1-47/64	4-1/4	5	1/2	15/16	3/4	3-5/16	1-37/64	1-11/16	25/64	29/32	2-7/8	5-3/4	9/163	3/16
	1-3/16	2.7																	
	1-1/4	2.6																	
	30mm	*1.3*	*32.9*	*158.8*	*44.1*	*108.0*	*127.0*	*M12*	*23.8*	*19.1*	*84.1*	*40.1*	*42.9*	*9.9*	*23.0*	*73.0*	*146.1*	*14.3*	*4.8*

FEATURES/BENEFITS PAGE B8-2	HOW TO ORDER/NOMENCLATURE PAGE B4-5	EASY SELECTION PAGE B8-3	ACCESSORIES PAGE B8-26

SELECTION/DIMENSIONS

Setscrew VSC Ball Bearings
VSC AND VSCU INTERMEDIATE DUTY PILLOW BLOCKS

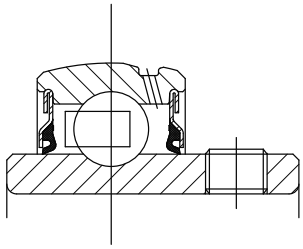

Lube Fitting
203 series - 1/4-28 tapered thread
204 series and larger - 1/8-27 NPT

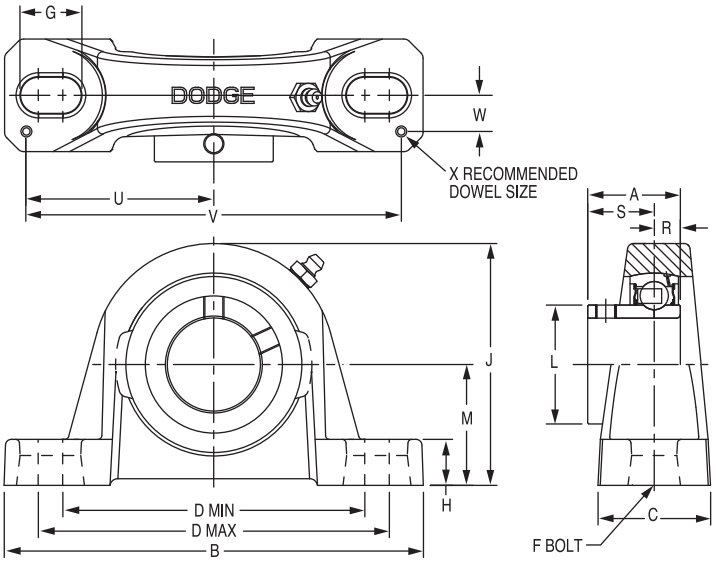

Series	Shaft Size	Standard		No-Lube/Sealed for Life (-NL)	
		Part No.	Description	Part No.	Description
207	1-1/4	**123583**	P2B-VSC-104	**051889**	P2B-VSC-104-NL
	1-3/8	**125505**	P2B-VSC-106	**@**	P2B-VSC-106-NL
	1-7/16	**123584**	P2B-VSC-107	**050838**	P2B-VSC-107-NL
	35mm	***125689***	*P2B-VSC-35M*	***067664***	*P2B-VSC-35M-NL*
208	1-1/2	**123585**	P2B-VSC-108	**051890**	P2B-VSC-108-NL
	40mm	**@**	*P2B-VSC-40M*	**@**	*P2B-VSC-40M-NL*
209	1-11/16	**125506**	P2B-VSC-111	**@**	P2B-VSC-111-NL
	1-3/4	**124933**	P2B-VSC-112	**@**	P2B-VSC-112-NL
	45mm	***125691***	*P2B-VSC-45M*	**@**	*P2B-VSC-45M-NL*
210	1-15/16	**123586**	P2B-VSC-115	**053662**	P2B-VSC-115-NL
	2	**123587**	P2B-VSC-200	**@**	P2B-VSC-200-NL
	50mm	***125692***	*P2B-VSC-50M*	**@**	*P2B-VSC-50M-NL*
211	2	**123593**	P2B-VSC-200L	**049784**	P2B-VSC-200L-NL
	2-3/16	**123588**	P2B-VSC-203	**@**	P2B-VSC-203-NL
	55mm	***125693***	*P2B-VSC-55M*	**@**	*P2B-VSC-55M-NL*

@Assembled to order



Setscrew VSC Ball Bearings

VSC AND VSCU INTERMEDIATE DUTY PILLOW BLOCKS

Series	Shaft Size	Weight lbs. *kgs.*	A	B	C	D		F Bolt Dia.	G	H	J	L	M	R	S	U	V	W	X
						Min.	Max.												
207	1-1/4	4.5	1.71	6.50	1.75	4.68	5.44	1/2	0.94	0.71	3.75	1.84	1.88	0.67	1.04	2.91	5.82	0.56	0.12
	1-3/8	4.3																	
	1-7/16	4.2																	
	35mm	*2.0*	*43.4*	*165.1*	*44.5*	*118.9*	*138.2*	*M12*	*23.9*	*18.0*	*95.3*	*46.7*	*47.8*	*17.0*	*26.4*	*73.9*	*147.8*	*14.2*	*3.0*
208	1-1/2	5.4	1.94	7.25	1.93	5.18	5.88	1/2	0.91	0.93	4.19	2.05	2.13	0.75	1.19	3.26	6.52	0.69	0.12
	40mm	*2.5*	*49.3*	*184.2*	*49.0*	*131.6*	*149.4*	*M12*	*23.1*	*23.6*	*106.4*	*52.1*	*54.1*	*19.1*	*30.2*	*82.8*	*165.6*	*17.5*	*3.0*
209	1-11/16	6.4	1.94	7.44	2.00	5.50	6.19	1/2	0.90	0.75	4.28	2.22	2.13	0.75	1.19	3.38	6.76	0.69	0.12
	1-3/4	6.2																	
	45mm	*3.0*	*49.3*	*189.0*	*50.8*	*139.7*	*157.2*	*M12*	*22.9*	*19.1*	*108.7*	*56.4*	*54.1*	*19.1*	*30.2*	*85.9*	*171.7*	*17.5*	*3.0*
210	1-15/16	7.2	1.94	8.12	2.25	6.00	6.68	5/8	1.02	0.75	4.53	2.43	2.25	0.75	1.19	3.69	7.38	0.81	0.12
	2	7.0																	
	50mm	*3.3*	*49.3*	*206.2*	*57.2*	*152.4*	*169.7*	*M16*	*25.9*	*19.1*	*115.1*	*61.7*	*57.2*	*19.1*	*30.2*	*93.7*	*187.5*	*20.6*	*3.0*
211	2	9.0	2.22	8.88	2.30	6.38	7.44	5/8	1.21	0.88	4.96	2.71	2.50	0.87	1.35	3.94	7.88	0.81	0.12
	2-3/16	8.9																	
	55mm	*4.2*	*56.4*	*225.6*	*58.4*	*162.1*	*189.0*	*M16*	*30.7*	*22.4*	*126.0*	*68.8*	*63.5*	*22.1*	*34.3*	*100.1*	*200.2*	*20.6*	*3.0*

FEATURES/BENEFITS PAGE B8-2	HOW TO ORDER/NOMENCLATURE PAGE B4-5	EASY SELECTION PAGE B8-3	ACCESSORIES PAGE B8-26

SELECTION/DIMENSIONS

Setscrew VSC Ball Bearings
VSCB INTERMEDIATE DUTY PILLOW BLOCKS

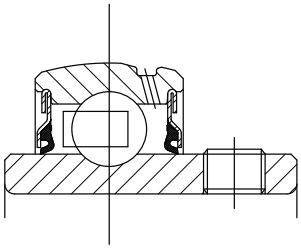

Lube Fitting
203 series - 1/4-28 tapered thread
204 series and larger - 1/8-27 NPT

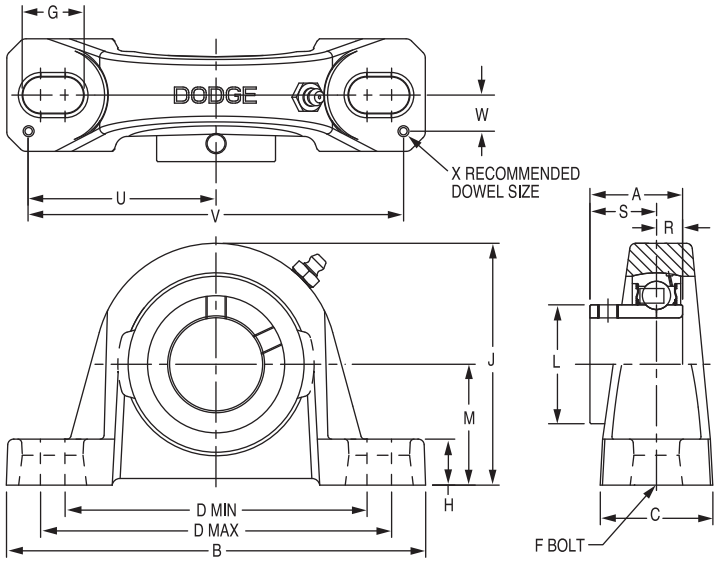

Series	Shaft Size	Standard		No-Lube/Sealed for Life (-NL)	
		Part No.	Description	Part No.	Description
203 (VSC)	1/2	**125500**	P2B-VSC-008	@	P2B-VSC-008-NL
	5/8	**125501**	P2B-VSC-010	@	P2B-VSC-010-NL
	17mm	*@*	*P2B-VSC-17M*	*@*	*P2B-VSC-17M-NL*
204	3/4	**123595**	P2B-VSCB-012	**050833**	P2B-VSCB-012-NL
	20mm	*@*	*P2B-VSCB-20M*	*@*	*P2B-VSCB-20M-NL*
205	7/8	**125508**	P2B-VSCB-014	@	P2B-VSCB-014-NL
	15/16	**125509**	P2B-VSCB-015	@	P2B-VSCB-015-NL
	1	**123596**	P2B-VSCB-100	**050828**	P2B-VSCB-100-NL
	25mm	*@*	*P2B-VSCB-25M*	*@*	*P2B-VSCB-25M-NL*
206	1-1/8	**125510**	P2B-VSCB-102	@	P2B-VSCB-102-NL
	1-3/16	**123597**	P2B-VSCB-103	**050829**	P2B-VSCB-103-NL
	1-1/4	**123605**	P2B-VSCB-104S	@	P2B-VSCB-104S-NL
	30mm	*@*	*P2B-VSCB-30M*	*@*	*2B-VSCB-30M-NL*
207	1-1/4	**123598**	P2B-VSCB-104	@	P2B-VSCB-104-NL
	1-3/8	**125511**	P2B-VSCB-106	@	P2B-VSCB-106-NL
	1-7/16	**123599**	P2B-VSCB-107	**050830**	P2B-VSCB-107-NL
	35mm	*@*	*P2B-VSCB-35M*	*@*	*P2B-VSCB-35M-NL*
208	1-1/2	**123600**	P2B-VSCB-108	@	P2B-VSCB-108-NL
	40mm	***125690***	*P2B-VSCB-40M*	*@*	*P2B-VSCB-40M-NL*
209	1-11/16	**125512**	P2B-VSCB-111	**050848**	P2B-VSCB-111-NL
	1-3/4	**125507**	P2B-VSCB-112	@	P2B-VSCB-112-NL
	45mm	*@*	*P2B-VSCB-45M*	***068428***	*P2B-VSCB-45M-NL*
210	1-15/16	**123601**	P2B-VSCB-115	@	P2B-VSCB-115-NL
	2	**123602**	P2B-VSCB-200	@	P2B-VSCB-200-NL
	50mm	*@*	*P2B-VSCB-50M*	*@*	*P2B-VSCB-50M-NL*
211	2	**123607**	P2B-VSCB-200L	@	P2B-VSCB-200L-NL
	2-3/16	**123603**	P2B-VSCB-203	**050831**	P2B-VSCB-203-NL
	55mm	*@*	*P2B-VSCB-55M*	*@*	*P2B-VSCB-55M-NL*

@ Assembled to order

FEATURES/BENEFITS PAGE B8-2 | HOW TO ORDER/NOMENCLATURE PAGE B4-5 | EASY SELECTION PAGE B8-3 | ACCESSORIES PAGE B8-26



Setscrew VSC Ball Bearings
VSCB INTERMEDIATE DUTY PILLOW BLOCKS

Series	Shaft Size	Weight lbs. *kgs.*	A	B	C	D		F Bolt Dia.	G	H	J	L	M	R	S	U	V	W	X
						Min.	Max.												
203 (VSC)	1/2	1.1	1.00	5.00	1.20	3.25	4.06	3/8	0.84	0.47	2.14	0.96	1.06	0.36	0.64	2.25	4.50	0.38	0.12
	5/8	1.0																	
	17mm	*0.5*	*25.4*	*127.0*	*30.5*	*82.6*	*103.1*	*M10*	*21.3*	*11.9*	*54.4*	*24.4*	*26.9*	*9.1*	*16.3*	*57.2*	*114.3*	*9.7*	*3.0*
204	3/4	1.4	1.23	5.25	1.34	3.38	4.19	3/8	0.85	0.47	2.49	1.12	1.25	0.50	0.73	2.25	4.50	0.50	0.12
	20mm	*0.6*	*31.2*	*133.4*	*34.0*	*85.9*	*106.4*	*M10*	*21.6*	*11.9*	*63.2*	*28.4*	*31.8*	*12.7*	*18.5*	*57.2*	*114.3*	*12.7*	*3.0*
205	7/8	1.8	1.34	5.50	1.40	3.69	4.50	3/8	0.85	0.45	2.64	1.32	1.31	0.56	0.78	2.50	5.00	0.50	0.12
	15/16	1.7																	
	1	1.6																	
	25mm	*0.8*	*34.0*	*139.7*	*35.6*	*93.7*	*114.3*	*M10*	*21.6*	*11.4*	*67.1*	*33.5*	*33.3*	*14.2*	*19.8*	*63.5*	*127.0*	*12.7*	*3.0*
206	1-1/8	2.7	1.52	6.25	1.75	4.25	5.00	1/2	0.94	0.62	3.19	1.57	1.56	0.58	0.94	2.88	5.76	0.56	0.12
	1-3/16	2.6																	
	1-1/4	2.5																	
	30mm	*1.2*	*38.6*	*158.8*	*44.5*	*108.0*	*127.0*	*M12*	*23.9*	*15.8*	*81.0*	*39.9*	*39.6*	*14.7*	*23.9*	*73.2*	*146.3*	*14.2*	*3.0*
207	1-1/4	4.5	1.71	6.50	1.75	4.68	5.44	1/2	0.94	0.65	3.69	1.84	1.81	0.67	1.04	2.91	5.82	0.56	0.12
	1-3/8	4.3																	
	1-7/16	4.2																	
	35mm	*2.0*	*43.4*	*165.1*	*44.5*	*118.9*	*138.2*	*M12*	*23.9*	*16.5*	*93.7*	*46.7*	*46.0*	*17.0*	*26.4*	*73.9*	*147.8*	*14.2*	*3.0*
208	1-1/2	5.4	1.94	7.25	1.93	5.18	5.88	1/2	0.91	0.75	4.00	2.05	1.94	0.75	1.19	3.26	6.52	0.69	0.12
	40mm	*2.5*	*49.3*	*184.2*	*49.0*	*131.6*	*149.4*	*M12*	*23.1*	*19.1*	*101.6*	*52.1*	*49.3*	*19.1*	*30.2*	*82.8*	*165.6*	*17.5*	*3.0*
209	1-11/16	6.4	1.94	7.44	2.00	5.50	6.19	1/2	0.90	0.69	4.21	2.22	2.06	0.75	1.19	3.38	6.76	0.69	0.12
	1-3/4	6.2																	
	45mm	*3.0*	*49.3*	*189.0*	*50.8*	*139.7*	*157.2*	*M12*	*22.9*	*17.5*	*106.9*	*56.4*	*52.3*	*19.1*	*30.2*	*85.9*	*171.7*	*17.5*	*3.0*
210	1-15/16	7.2	1.94	8.12	2.25	6.00	6.68	5/8	1.02	0.68	4.47	2.43	2.19	0.75	1.19	3.69	7.38	0.81	0.12
	2	7.0																	
	50mm	*3.3*	*49.3*	*206.2*	*57.2*	*152.4*	*169.7*	*M16*	*25.9*	*17.3*	*113.5*	*61.7*	*55.6*	*19.1*	*30.2*	*93.7*	*187.5*	*20.6*	*3.0*
211	2	9.0	2.22	8.88	2.30	6.38	7.44	5/8	1.21	0.81	4.90	2.71	2.44	0.87	1.35	3.94	7.88	0.81	0.12
	2-3/16	8.9																	
	55mm	*4.2*	*56.4*	*225.6*	*58.4*	*162.1*	*189.0*	*M16*	*30.7*	*20.6*	*124.5*	*68.8*	*62.0*	*22.1*	*34.3*	*100.1*	*200.2*	*20.6*	*3.0*

FEATURES/BENEFITS PAGE B8-2	HOW TO ORDER/NOMENCLATURE PAGE B4-5	EASY SELECTION PAGE B8-3	ACCESSORIES PAGE B8-26

SELECTION/DIMENSIONS

Setscrew VSC Ball Bearings
VSC INTERMEDIATE DUTY 2-BOLT FLANGE BEARINGS

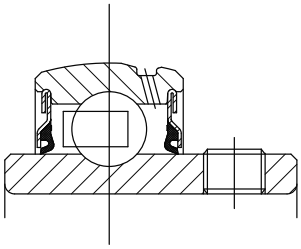

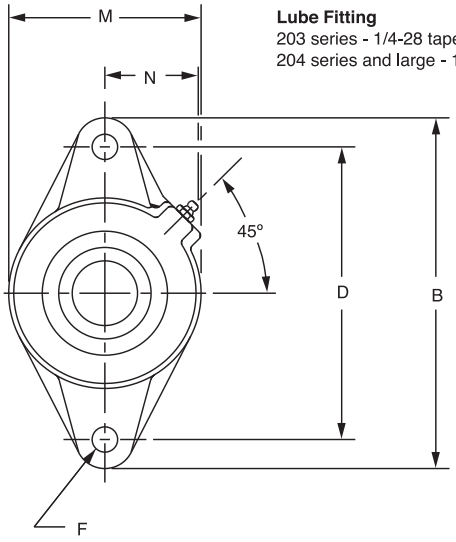

Lube Fitting
203 series - 1/4-28 tapered thread
204 series and large - 1/8-27 NPT

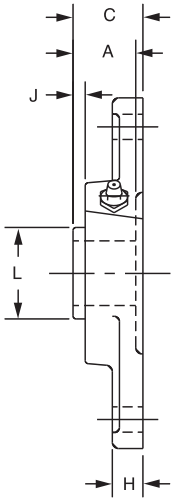

Series	Shaft Size	Standard		No-Lube/Sealed for Life (-NL)	
		Part No.	Description	Part No.	Description
203	1/2	**125516**	F2B-VSC-008	**@**	F2B-VSC-008-NL
	5/8	**125517**	F2B-VSC-010	**@**	F2B-VSC-010-NL
	17mm	***125703***	*F2B-VSC-17M*	**@**	*F2B-VSC-17M-NL*
204	3/4	**123610**	F2B-VSC-012	**057854**	F2B-VSC-012-NL
	20mm	***125704***	*F2B-VSC-20M*	**@**	*F2B-VSC-20M-NL*
205	7/8	**125518**	F2B-VSC-014	**@**	F2B-VSC-014-NL
	15/16	**125519**	F2B-VSC-015	**@**	F2B-VSC-015-NL
	1	**123611**	F2B-VSC-100	**050778**	F2B-VSC-100-NL
	25mm	***125705***	*F2B-VSC-25M*	**@**	*F2B-VSC-25M-NL*
206	1-1/8	**125520**	F2B-VSC-102	**@**	F2B-VSC-102-NL
	1-3/16	**123612**	F2B-VSC-103	**050840**	F2B-VSC-103-NL
	1-1/4	**123618**	F2B-VSC-104S	**051888**	F2B-VSC-104S-NL
	30mm	***125752***	*F2B-VSC-30M*	**@**	*F2B-VSC-30M-NL*
207	1-1/4	**123613**	F2B-VSC-104	**@**	F2B-VSC-104-NL
	1-3/8	**125521**	F2B-VSC-106	**049468**	F2B-VSC-106-NL
	1-7/16	**123614**	F2B-VSC-107	**051699**	F2B-VSC-107-NL
	35mm	***125706***	*F2B-VSC-35M*	**@**	*F2B-VSC-35M-NL*
208	1-1/2	**123615**	F2B-VSC-108	**@**	F2B-VSC-108-NL
	40mm	***125707***	*F2B-VSC-40M*	**@**	*F2B-VSC-40M-NL*
209	1-11/16	**125522**	F2B-VSC-111	**050842**	F2B-VSC-111-NL
	1-3/4	**125523**	F2B-VSC-112	**049892**	F2B-VSC-112-NL
	45mm	***125708***	*F2B-VSC-45M*	**@**	*F2B-VSC-45M-NL*
210	1-15/16	**123616**	F2B-VSC-115	**059811**	F2B-VSC-115-NL
	2	**123617**	F2B-VSC-200	**068716**	F2B-VSC-200-NL
	50mm	***125709***	*F2B-VSC-50M*	**@**	*F2B-VSC-50M-NL*
211	2	**123694**	F2B-VSC-200L	**@**	F2B-VSC-200L-NL
	2-3/16	**123619**	F2B-VSC-203	**@**	F2B-VSC-203-NL
	55mm	***125710***	*F2B-VSC-55M*	**@**	*F2B-VSC-55M-NL*

@Assembled to order



Setscrew VSC Ball Bearings

VSC INTERMEDIATE DUTY 2-BOLT FLANGE BEARINGS

Series	Shaft Size	Weight lbs. *kg.*	A	B	C	D	F Bolt Dia.	H	J	L	M	N
203	1/2	0.8	1.00	3.88	1.17	3.00	3/8	0.38	0.32	0.96	2.13	1.13
	5/8	0.7										
	17mm	*0.36*	*25.4*	*98.6*	*29.7*	*76.2*	*M10*	*9.7*	*8.1*	*24.4*	*54.1*	*28.7*
204	3/4	1.4	1.23	4.41	1.34	3.53	3/8	0.50	0.36	1.12	2.38	1.50
	20mm	*0.63*	*31.2*	*112.0*	*34.0*	*89.7*	*M10*	*12.7*	*9.1*	*28.4*	*60.5*	*38.1*
205	7/8	1.6	1.34	4.88	1.37	3.89	7/16	0.52	0.42	1.32	2.75	1.44
	15/16	1.5										
	1	1.4										
	25mm	*0.67*	*34.0*	*124.0*	*34.8*	*98.8*	*M10*	*13.2*	*10.7*	*33.5*	*69.9*	*36.6*
206	1-1/8	2.2	1.52	5.56	1.56	4.59	7/16	0.50	0.49	1.57	3.13	1.56
	1-3/16	2.1										
	1-1/4	2.0										
	30mm	*0.94*	*38.6*	*141.2*	*39.6*	*116.6*	*M10*	*12.7*	*12.4*	*39.9*	*79.5*	*39.6*
207	1-1/4	3.5	1.71	6.13	1.75	5.12	1/2	0.56	0.53	1.84	3.75	1.84
	1-3/8	3.3										
	1-7/16	3.2										
	35mm	*1.43*	*43.4*	*155.7*	*44.5*	*130.0*	*M12*	*14.2*	*13.5*	*46.7*	*95.3*	*46.7*
208	1-1/2	4.1	1.94	6.75	1.98	5.66	1/2	0.56	0.63	2.05	4.13	1.83
	40mm	*1.83*	*49.3*	*171.5*	*50.3*	*143.8*	*M12*	*14.2*	*16.0*	*52.1*	*104.9*	*46.5*
209	1-11/16	5.0	1.94	7.06	1.99	5.84	1/2	0.63	0.59	2.22	4.38	1.91
	1-3/4	4.9										
	45mm	*2.23*	*49.3*	*179.3*	*50.5*	*148.3*	*M14*	*16.0*	*15.0*	*56.4*	*111.3*	*48.5*
210	1-15/16	5.4	1.94	7.44	2.02	6.19	1/2	0.63	0.55	2.43	4.56	2.03
	2	5.2										
	50mm	*2.41*	*49.3*	*189.0*	*51.3*	*157.2*	*M16*	*16.0*	*14.0*	*61.7*	*115.8*	*51.6*
211	2	6.7	2.22	8.63	2.28	7.25	5/8	0.67	0.68	2.71	5.25	2.27
	2-3/16	6.5										
	55mm	*2.99*	*56.4*	*219.2*	*57.9*	*184.2*	*M16*	*17.0*	*17.3*	*68.8*	*133.4*	*57.7*

FEATURES/BENEFITS PAGE B8-2	HOW TO ORDER/NOMENCLATURE PAGE B4-5	EASY SELECTION PAGE B8-3	ACCESSORIES PAGE B8-26

SELECTION/DIMENSIONS

Setscrew VSC Ball Bearings
VSC INTERMEDIATE DUTY 4-BOLT FLANGE BEARINGS

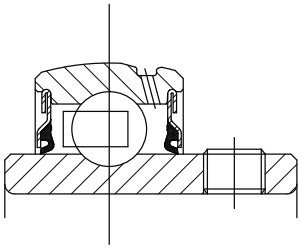

Lube Fitting Thread Size:
203 - 204 series - 1/4-28 tapered thread
207 - 207 series - 1/8-27 NPT

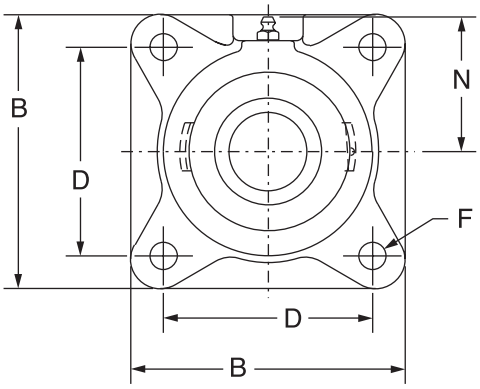

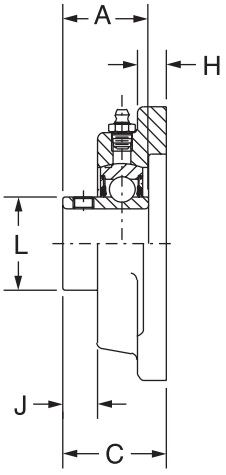

Series	Shaft Size	Standard		No-Lube/Sealed for Life (-NL)	
		Part No.	Description	Part No.	Description
203	1/2	**125524**	F4B-VSC-008	**@**	F4B-VSC-008-NL
	5/8	**125525**	F4B-VSC-010	**@**	F4B-VSC-010-NL
	17mm	***125694***	*F4B-VSC-17M*	**@**	*F4B-VSC-17MNL*
204	3/4	**123625**	F4B-VSC-012	**@**	F4B-VSC-012-NL
	20mm	***125695***	*F4B-VSC-20M*	**@**	*F4B-VSC-20M-NL*
205	7/8	**125526**	F4B-VSC-014	**@**	F4B-VSC-014-NL
	15/16	**125527**	F4B-VSC-015	**@**	F4B-VSC-015-NL
	1	**123626**	F4B-VSC-100	**062509**	F4B-VSC-100-NL
	25mm	***125696***	*F4B-VSC-25M*	**@**	*F4B-VSC-25M-NL*
206	1-1/8	**125528**	F4B-VSC-102	**@**	F4B-VSC-102-NL
	1-3/16	**123627**	F4B-VSC-103	**@**	F4B-VSC-103-NL
	1-1/4	**123634**	F4B-VSC-104S	**@**	F4B-VSC-104S-NL
	30mm	***125697***	*F4B-VSC-30M*	**@**	*F4B-VSC-30M-NL*
207	1-1/4	**123628**	F4B-VSC-104	**051891**	F4B-VSC-104-NL
	1-3/8	**125529**	F4B-VSC-106	**@**	F4B-VSC-106-NL
	1-7/16	**123629**	F4B-VSC-107	**050844**	F4B-VSC-107-NL
	35mm	***125698***	*F4B-VSC-40M*	**@**	*F4B-VSC-40M-NL*
208	1-1/2	**123630**	F4B-VSC-108	**051892**	F4B-VSC-108-NL
	40mm	***125699***	*F4B-VSC-40M*	**@**	*F4B-VSC-40M-NL*
209	1-11/16	**125530**	F4B-VSC-111	**050836**	F4B-VSC-111-NL
	1-3/4	**125531**	F4B-VSC-112	**@**	F4B-VSC-112-NL
	45mm	***125700***	*F4B-VSC-45M*	**@**	*F4B-VSC-45M-NL*
210	1-15/16	**123631**	F4B-VSC-115	**@**	F4B-VSC-115-NL
	2	**123632**	F4B-VSC-200	**068716**	F4B-VSC-200-NL
	50mm	***125701***	*F4B-VSC-50M*	**@**	*F4B-VSC-50M-NL*
211	2	**123652**	F4B-VSC-200L	**@**	F4B-VSC-200L-NL
	2-3/16	**123633**	F4B-VSC-203	**068809**	F4B-VSC-203-NL
	55mm	***125702***	*F4B-VSC-55M*	**@**	*F4B-VSC-55M-NL*

@Assembled to order

DODGE®



Setscrew VSC Ball Bearings
VSC INTERMEDIATE DUTY 4-BOLT FLANGE BEARINGS

Series	Shaft Size	Weight lbs. *kgs.*	A	B	C	D	F Bolt Dia.	H	J	L	N
203	1/2	1.08	1.00	3.00	1.17	2.13	3/8	0.44	0.32	0.96	1.69
	5/8	1.00									
	17mm	*0.48*	*25.4*	*76.2*	*29.7*	*54.1*	*M10*	*11.2*	*8.1*	*24.4*	*42.9*
204	3/4	1.50	1.23	3.38	1.34	2.50	3/8	0.44	0.36	1.12	1.94
	20mm	*0.67*	*31.2*	*85.9*	*34.0*	*63.5*	*M10*	*11.2*	*9.1*	*28.4*	*49.3*
205	7/8	1.98	1.34	3.75	1.37	2.75	7/16	0.50	0.42	1.32	2.06
	15/16	1.86									
	1	1.62									
	25mm	*0.84*	*34.0*	*95.3*	*34.8*	*69.9*	*M10*	*12.7*	*10.7*	*33.5*	*52.3*
206	1-1/8	2.78	1.52	4.25	1.56	3.25	7/16	0.50	0.49	1.57	2.19
	1-3/16	2.68									
	1-1/4	2.50									
	30mm	*1.19*	*38.6*	*108.0*	*39.6*	*82.6*	*M10*	*12.7*	*12.4*	*39.9*	*55.6*
207	1-1/4	3.50	1.71	4.75	1.75	3.63	1/2	0.56	0.53	1.84	2.44
	1-3/8	2.88									
	1-7/16	2.50									
	35mm	*1.28*	*43.4*	*120.7*	*44.5*	*92.2*	*M12*	*14.2*	*13.5*	*46.7*	*62.0*
208	1-1/2	4.50	1.94	5.13	1.98	4.00	1/2	0.56	0.63	2.05	2.38
	40mm	*2.00*	*49.3*	*130.3*	*50.3*	*101.6*	*M12*	*14.2*	*16.0*	*52.1*	*60.5*
209	1-11/16	5.45	1.94	5.38	1.99	4.13	1/2	0.63	0.59	2.22	2.75
	1-3/4	5.35									
	45mm	*2.42*	*49.3*	*136.7*	*50.5*	*104.9*	*M12*	*16.0*	*15.0*	*56.4*	*69.9*
210	1-15/16	6.25	1.94	5.63	2.02	4.38	1/2	0.63	0.55	2.43	2.88
	2	6.00									
	50mm	*2.33*	*49.3*	*143.0*	*51.3*	*111.3*	*M12*	*16.0*	*14.0*	*61.7*	*73.2*
211	2	9.28	2.22	6.50	2.28	5.13	5/8	0.69	0.68	2.71	3.25
	2-3/16	9.00									
	55mm	*4.12*	*56.4*	*165.1*	*57.9*	*130.3*	*M16*	*17.5*	*17.3*	*68.8*	*82.6*

FEATURES/BENEFITS PAGE B8-2	HOW TO ORDER/NOMENCLATURE PAGE B4-5	EASY SELECTION PAGE B8-3	ACCESSORIES PAGE B8-26

SELECTION/DIMENSIONS

Setscrew VSC Ball Bearings

VSC INTERMEDIATE DUTY NARROW SLOT TAKE-UP BEARINGS

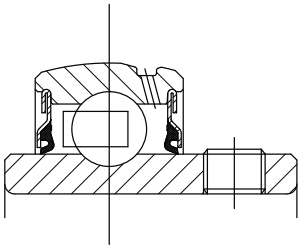

Lube Fitting Thread Size:
1/8-27 NPT

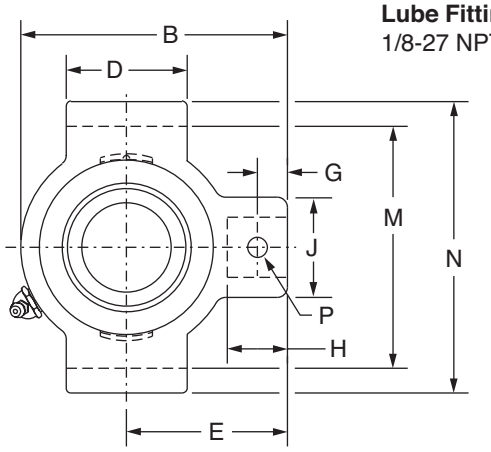

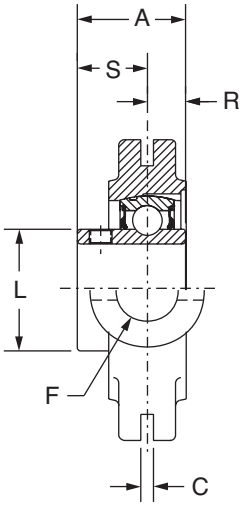

Series	Shaft Size	Part No.	Description
204	3/4	**125533**	NSTU-VSC-012
	20mm	*@*	*NSTU-VSC-20M*
205	7/8	**125534**	NSTU-VSC-014
	15/16	**125535**	NSTU-VSC-015
	1	**125536**	NSTU-VSC-100
	25mm	*@*	*NSTU-VSC-25M*
206	1-1/8	**125537**	NSTU-VSC-102
	1-3/16	**125538**	NSTU-VSC-103
	1-1/4	**125540**	NSTU-VSC-104S
	30mm	*@*	*NSTU-VSC-30M*
207	1-1/4	**125539**	NSTU-VSC-104
	1-3/8	**125541**	NSTU-VSC-106
	1-7/16	**123680**	NSTU-VSC-107
	35mm	*@*	*NSTU-VSC-35M*
208	1-1/2	**125542**	NSTU-VSC-108
	40mm	*@*	*NSTU-VSC-40M*
209	1-11/16	**125543**	NSTU-VSC-111
	1-3/4	**125544**	NSTU-VSC-112
	45mm	*@*	*NSTU-VSC-45M*
210	1-15/16	**125545**	NSTU-VSC-115
	2	**125546**	NSTU-VSC-200
	50mm	*@*	*NSTU-VSC-50M*
211	2	**125547**	NSTU-VSC-200
	2-3/16	**125548**	NSTU-VSC-203
	55mm	*@*	*NSTU-VSC-55M*

@ Assembled to order



Setscrew VSC Ball Bearings
VSC INTERMEDIATE DUTY NARROW SLOT TAKE-UP BEARINGS

Series	Shaft Size	Weight lbs. *kgs.*	Take-Up Frame No. Ref.	A	B	C	D	E	F Screw Dia.	G	H	J	L	M	N	P Pin Dia.	R	S
204	3/4	1.25	NS210	1.23	3.50	0.250	1.50	2.19	3/4	0.44	0.88	1.38	1.12	2.635/2.605	3.13	0.32	0.50	0.73
	20mm	*0.58*		*31.2*	*88.9*	*6.35*	*38.1*	*55.6*	*19.1*	*11.2*	*22.4*	*35.1*	*28.4*	*66.93/66.17*	*79.5*	*8.1*	*12.7*	*18.5*
205	7/8	1.68	NS210	1.34	3.56	0.250	1.50	2.19	3/4	0.44	0.88	1.38	1.32	2.635/2.605	3.13	0.32	0.56	0.78
	15/16	1.58																
	1	1.48																
	25mm	*0.73*		*34.0*	*90.4*	*6.35*	*38.1*	*55.6*	*19.1*	*11.2*	*22.4*	*35.1*	*33.5*	*66.93/66.17*	*79.5*	*8.1*	*14.2*	*19.8*
206	1-1/8	2.78	NS308	1.52	4.31	0.250	2.50	2.69	3/4	0.50	0.94	1.38	1.57	3.510/3.480	4.13	0.32	0.58	0.94
	1-3/16	2.58																
	1-1/4	2.48																
	30mm	*1.19*		*38.6*	*109.5*	*6.35*	*63.5*	*68.3*	*19.1*	*12.7*	*23.9*	*35.1*	*39.9*	*89.15/88.39*	*104.9*	*8.1*	*14.7*	*23.9*
207	1-1/4	2.78	NS308	1.71	4.50	0.250	2.50	2.69	3/4	0.50	0.94	1.38	1.84	3.510/3.480	4.13	0.32	0.67	1.04
	1-3/8	2.58																
	1-7/16	2.48																
	35mm	*1.19*		*43.4*	*114.3*	*6.35*	*63.5*	*68.3*	*19.1*	*12.7*	*23.9*	*35.1*	*46.7*	*89.15/88.39*	*104.9*	*8.1*	*17.0*	*26.4*
208	1-1/2	4.68	NS400	1.94	5.38	0.313	3.00	3.25	7/8	0.66	1.16	1.63	2.05	4.015/3.985	4.75	0.38	0.75	1.19
	40mm	*2.16*		*49.3*	*136.7*	*7.95*	*76.2*	*82.6*	*22.2*	*16.8*	*29.5*	*41.4*	*52.1*	*101.98/101.22*	*120.7*	*9.7*	*19.1*	*30.2*
209	1-11/16	4.78	NS400	1.94	5.44	0.313	3.00	3.25	7/8	0.72	1.22	1.63	2.22	4.015/3.985	4.75	0.38	0.75	1.19
	1-3/4	4.68																
	45mm	*2.20*		*49.3*	*138.2*	*7.95*	*76.2*	*82.6*	*22.2*	*18.3*	*31.0*	*41.4*	*56.4*	*101.98/101.22*	*120.7*	*9.7*	*19.1*	*30.2*
210	1-15/16	4.88	NS400	1.94	5.50	0.313	3.00	3.25	7/8	0.59	1.09	1.63	2.43	4.015/3.985	4.75	0.38	0.75	1.19
	2	4.78																
	50mm	*2.25*		*49.3*	*139.7*	*7.95*	*76.2*	*82.6*	*22.2*	*15.0*	*27.7*	*41.4*	*61.7*	*101.98/101.22*	*120.7*	*9.7*	*19.1*	*30.2*
211	2	6.78	NS407	2.22	6.13	0.313	3.50	3.63	1	0.69	1.28	1.75	2.71	4.448/4.418	5.38	0.44	0.87	1.35
	2-3/16	6.58																
	55mm	*3.13*		*56.4*	*155.7*	*7.95*	*88.9*	*92.2*	*25.4*	*17.5*	*32.5*	*44.5*	*68.8*	*112.98/112.22*	*136.7*	*11.2*	*22.1*	*34.3*

FEATURES/BENEFITS PAGE B8-2	HOW TO ORDER/NOMENCLATURE PAGE B4-5	EASY SELECTION PAGE B8-3	ACCESSORIES PAGE B8-26

SELECTION/DIMENSIONS

Setscrew VSC Ball Bearings
VSC INTERMEDIATE DUTY WIDE SLOT TAKE-UP BEARINGS

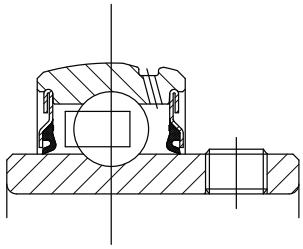

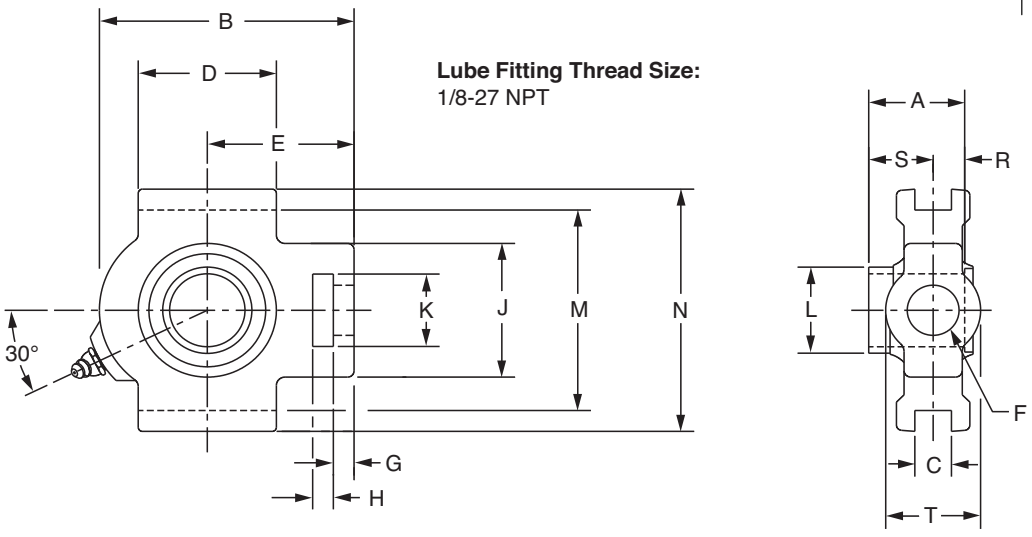

Lube Fitting Thread Size:
1/8-27 NPT

Series	Shaft Size	Part No.	Description
204	3/4	**125549**	WSTU-VSC-012
	20mm	**@**	*WSTU-VSC-20M*
205	7/8	**125550**	WSTU-VSC-014
	15/16	**125551**	WSTU-VSC-015
	1	**125552**	WSTU-VSC-100
	25mm	**@**	*WSTU-VSC-25M*
206	1-1/8	**125553**	WSTU-VSC-102
	1-3/16	**125554**	WSTU-VSC-103
	1-1/4	**125556**	WSTU-VSC-104S
	30mm	**@**	*WSTU-VSC-30M*
207	1-1/4	**125555**	WSTU-VSC-104
	1-3/8	**125557**	WSTU-VSC-106
	1-7/16	**125558**	WSTU-VSC-107
	35mm	**@**	*WSTU-VSC-35M*

@ Assembled to order



Setscrew VSC Ball Bearings
VSC INTERMEDIATE DUTY WIDE SLOT TAKE-UP BEARINGS

Series	Shaft Size	Weight lbs. kg.	Take-Up Frame No. Ref.	A	B	C	D	E	F Screw Dia.	G
204	3/4	1.9	WS300	1.23	3.69	0.531	2.00	2.38	5/8	0.38
	20mm	*0.87*		*31.2*	*93.7*	*13.49*	*50.8*	*60.5*	*15.9*	*9.7*
205	7/8	2.2	WS300	1.34	3.81	0.531	2.00	2.44	5/8	0.38
	15/16	2.1								
	1	2.0								
	25mm	*0.96*		*34.0*	*96.8*	*13.49*	*50.8*	*62.0*	*15.9*	*9.7*
206	1-1/8	3.0	WS308	1.52	4.38	0.531	2.25	2.75	3/4	0.38
	1-3/16	2.9								
	1-1/4	2.8								
	30mm	*1.33*		*38.6*	*111.3*	*13.49*	*57.2*	*69.9*	*19.1*	*9.7*
207	1-1/4	3.8	WS308	1.71	4.87	0.531	2.50	3.06	3/4	0.50
	1-3/8	3.6								
	1-7/16	3.5								
	35mm	*1.65*		*43.4*	*123.7*	*13.49*	*63.5*	*77.7*	*19.1*	*12.7*

Series	Shaft Size	H	J	K	L	M	N	R	S	T
204	3/4	0.63	2.00	1.25	1.12	2.985/3.015	3.63	0.50	0.73	1.38
	20mm	*16.0*	*50.8*	*31.8*	*28.4*	*75.82/76.58*	*92.2*	*12.7*	*18.5*	*35.1*
205	7/8	0.63	2.00	1.31	1.32	2.985/3.015	3.63	0.56	0.78	1.38
	15/16									
	1									
	25mm	*16.0*	*50.8*	*33.3*	*33.5*	*75.82/76.58*	*92.2*	*14.2*	*19.8*	*35.1*
206	1-1/8	0.63	2.19	1.44	1.57	3.480/3.510	4.13	0.58	0.94	1.63
	1-3/16									
	1-1/4									
	30mm	*16.0*	*55.6*	*36.6*	*39.9*	*88.39/89.15*	*104.9*	*14.7*	*23.9*	*41.3*
207	1-1/4	0.63	2.50	1.44	1.84	3.480/3.510	4.13	0.67	1.04	1.63
	1-3/8									
	1-7/16									
	35mm	*16.0*	*63.5*	*36.6*	*46.7*	*88.39/89.15*	*104.9*	*17.0*	*26.4*	*41.3*

FEATURES/BENEFITS PAGE B8-2	HOW TO ORDER/NOMENCLATURE PAGE B4-5	EASY SELECTION PAGE B8-3	ACCESSORIES PAGE B8-26

SELECTION/DIMENSIONS

Setscrew VSC Ball Bearings
VSC INTERMEDIATE DUTY WIDE SLOT TAKE-UP BEARINGS

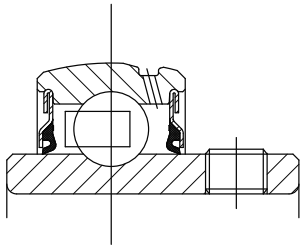

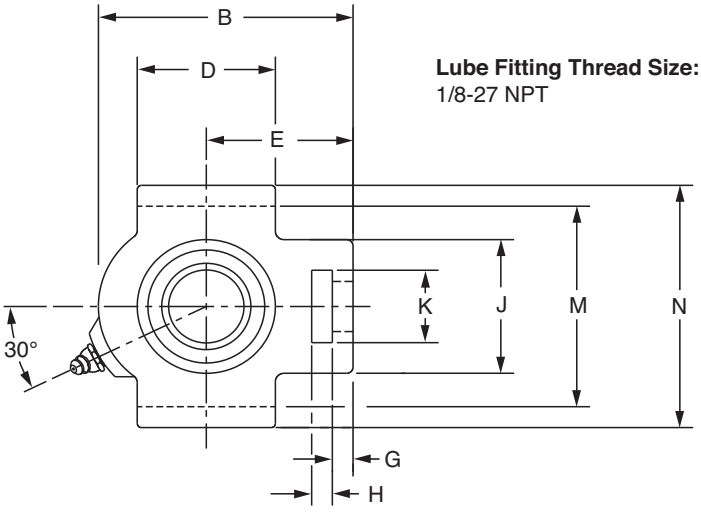

Lube Fitting Thread Size:
1/8-27 NPT

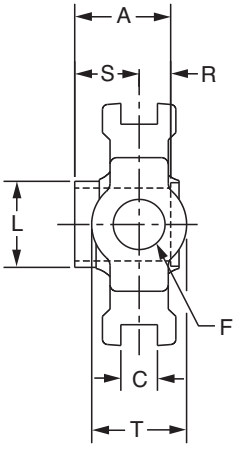

Series	Shaft Size	Part No.	Description
208	1-1/2	**125559**	WSTU-VSC-108
	40mm	**@**	*WSTU-VSC-40M*
209	1-11/16	**125560**	WSTU-VSC-111
	1-3/4	**125561**	WSTU-VSC-112
	45mm	**@**	*WSTU-VSC-45M*
210	1-15/16	**125562**	WSTU-VSC-115
	2	**125563**	WSTU-VSC-200
	50mm	**@**	*WSTU-VSC-50M*
211	2	**125564**	WSTU-VSC-200L
	2-3/16	**125565**	WSTU-VSC-203
	55mm	**@**	*WSTU-VSC-55M*

@ Assembled to order



Setscrew VSC Ball Bearings

VSC INTERMEDIATE DUTY WIDE SLOT TAKE-UP BEARINGS

Series	Shaft Size	Weight lbs. *kg.*	Take-Up Frame No. Ref.	A	B	C	D	E	F Screw Dia.	G
208	1-1/2	6.1	WS400	1.94	5.69	0.688	3.25	3.50	1	0.63
	40mm	*2.80*		*49.3*	*144.5*	*17.48*	*82.6*	*88.9*	*25.4*	*16.0*
209	1-11/16	6.0	WS400	1.94	5.63	0.688	3.25	3.44	1	0.63
	1-3/4	5.9								
	45mm	*2.76*		*49.3*	*143.0*	*17.48*	*82.6*	*87.4*	*25.4*	*16.0*
210	1-15/16	6.4	WS400	1.94	5.82	0.688	3.38	3.56	1	0.63
	2	6.2								
	50mm	*2.94*		*49.3*	*147.8*	*17.48*	*85.9*	*90.4*	*25.4*	*16.0*
211	2	10.1	WS502	2.22	6.69	1.063	3.75	4.19	1-1/4	0.75
	2-3/16	10.0								
	55mm	*4.65*		*56.4*	*169.9*	*27.00*	*95.3*	*106.4*	*31.8*	*19.1*

Series	Shaft Size	H	J	K	L	M	N	R	S	T
208	1-1/2	0.75	3.25	1.94	2.05	3.985/4.015	4.50	0.75	1.19	1.94
	40mm	*19.1*	*82.6*	*49.3*	*52.1*	*101.22/101.98*	*114.3*	*19.1*	*30.2*	*49.3*
209	1-11/16	0.75	3.25	1.94	2.22	3.985/4.015	4.75	0.75	1.19	1.94
	1-3/4									
	45mm	*19.1*	*82.6*	*49.3*	*56.4*	*101.22/101.98*	*120.7*	*19.1*	*30.2*	*49.3*
210	1-15/16	0.75	3.25	1.94	2.43	3.985/4.015	4.75	0.75	1.19	1.94
	2									
	50mm	*19.1*	*82.6*	*49.3*	*61.7*	*101.22/101.98*	*120.7*	*19.1*	*30.2*	*49.3*
211	2	1.00	4.00	2.50	2.71	5.110/5.140	5.88	0.87	1.35	2.50
	2-3/16									
	55mm	*25.4*	*101.6*	*63.5*	*68.8*	*129.79/130.56*	*149.4*	*22.1*	*34.3*	*63.5*

FEATURES/BENEFITS PAGE B8-2	HOW TO ORDER/NOMENCLATURE PAGE B4-5	EASY SELECTION PAGE B8-3	ACCESSORIES PAGE B8-26

SELECTION/DIMENSIONS

Setscrew VSC Ball Bearings
VSC INTERMEDIATE DUTY BEARING INSERTS

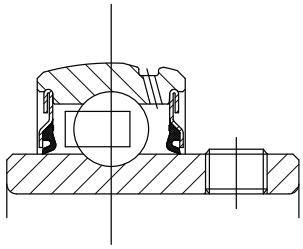

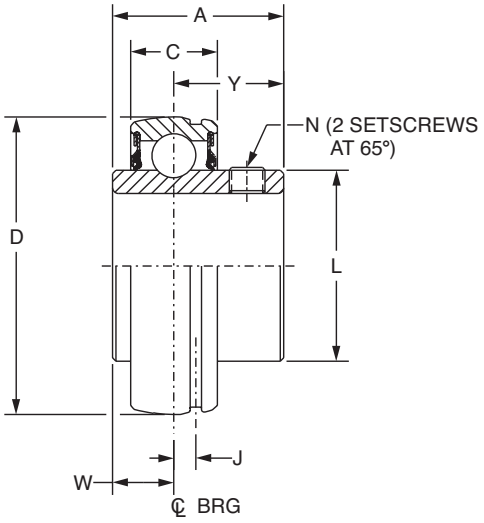

Series	Shaft Size	Part No.	Description
203	1/2	**389923**	INS-VSC-008
	5/8	**389924**	INS-VSC-010
	17mm	***125636***	*INS-VSC-17M*
204	3/4	**389925**	INS-VSC-012
	20mm	***125637***	*INS-VSC-20M*
205	7/8	**389936**	INS-VSC-014
	15/16	**389937**	INS-VSC-015
	1	**389926**	INS-VSC-100
	25mm	***125638***	*INS-VSC-25M*
206	1-1/8	**389938**	INS-VSC-102
	1-3/16	**389927**	INS-VSC-103
	1-1/4	**389934**	INS-VSC-104S
	30mm	***123235***	*INS-VSC-30M*
207	1-1/4	**389928**	INS-VSC-104
	1-3/8	**389939**	INS-VSC-106
	1-7/16	**389929**	INS-VSC-107
	35mm	***125639***	*INS-VSC-35M*
208	1-1/2	**389930**	INS-VSC-108
	40mm	***125640***	*INS-VSC-40M*
209	1-11/16	**389940**	INS-VSC-111
	1-3/4	**389941**	INS-VSC-112
	45mm	***125641***	*INS-VSC-45M*
210	1-15/16	**389931**	INS-VSC-115
	2	**389932**	INS-VSC-200
	50mm	***125642***	*INS-VSC-50M*
211	2	**389935**	INS-VSC-200L
	2-3/16	**389933**	INS-VSC-203
	55mm	***125643***	*INS-VSC-55M*

DODGE®



Setscrew VSC Ball Bearings

VSC INTERMEDIATE DUTY BEARING INSERTS

Series	Shaft Size	Weight lbs. *kg.*	A	C	D	J	L	N	W	Y
203	1/2	0.23	1.00	0.51	1.5748	0.15	0.96	10-32	0.36	0.64
	5/8	0.21								
	17mm	*0.10*	*25.4*	*13.0*	*40.000*	*3.8*	*24.4*	*M5x0.8*	*9.1*	*16.3*
204	3/4	0.25	1.23	0.58	1.8504	0.15	1.12	1/4-28	0.50	0.73
	20mm	*0.11*	*31.2*	*14.7*	*47.000*	*3.8*	*28.4*	*M6x1*	*12.7*	*18.5*
205	7/8	0.41	1.34	0.59	2.0472	0.16	1.32	1/4-28	0.56	0.78
	15/16	0.38								
	1	0.25								
	25mm	*0.17*	*34.0*	*15.0*	*52.000*	*4.1*	*33.5*	*M6x1*	*14.2*	*19.8*
206	1-1/8	0.61	1.52	0.69	2.4409	0.16	1.57	5/16-24	0.58	0.94
	1-3/16	0.58								
	1-1/4	0.56								
	30mm	*0.25*	*38.6*	*17.5*	*62.000*	*4.1*	*39.9*	*M8x1.25*	*14.7*	*23.9*
207	1-1/4	0.92	1.71	0.75	2.8346	0.20	1.84	5/16-24	0.67	1.04
	1-3/8	0.88								
	1-7/16	0.75								
	35mm	*0.38*	*43.4*	*19.1*	*72.000*	*5.1*	*46.7*	*M8x1.25*	*17.0*	*26.4*
208	1-1/2	1.20	1.94	0.87	3.1496	0.22	2.05	5/16-24	0.75	1.19
	40mm	*0.52*	*49.3*	*22.1*	*80.000*	*5.6*	*52.1*	*M8x1.25*	*19.1*	*30.2*
209	1-11/16	1.41	1.94	0.87	3.3465	0.25	2.22	5/16-24	0.75	1.19
	1-3/4	1.34								
	45mm	*0.61*	*49.3*	*22.1*	*85.000*	*6.4*	*56.4*	*M8x1.25*	*19.1*	*30.2*
210	1-15/16	1.46	1.94	0.87	3.5433	0.25	2.43	3/8-24	0.75	1.19
	2	1.37								
	50mm	*0.63*	*49.3*	*22.1*	*90.000*	*6.4*	*61.7*	*M10x1.5*	*19.1*	*30.2*
211	2	2.24	2.22	0.94	3.9370	0.25	2.71	3/8-24	0.87	1.35
	2-3/16	1.95								
	55mm	*0.97*	*56.4*	*23.9*	*100.000*	*6.4*	*68.8*	*M10x1.5*	*22.1*	*34.3*

FEATURES/BENEFITS PAGE B8-2	HOW TO ORDER/NOMENCLATURE PAGE B4-5	EASY SELECTION PAGE B8-3	ACCESSORIES PAGE B8-26

ACCESSORIES



Setscrew VSC Ball Bearings

LUBRICANTS

DODGE ball bearings are factory lubricated with a lithium complex base lubricant. For applications where extreme ambient temperatures or speeds are anticipated or environmental considerations require a different lubricant, DODGE has a wide variety of lubricants available. Special lubricant options usually require set-up charges and premiums.

SEALS

The PROGUARD PLUS seal is a highly effective positive contact, land riding seal with flingers pressed on to each side of the inner ring offering added protection from wash down or extreme contamination. For high speeds or where seal drag would be an impediment, an all metallic labyrinth seal is available.

AIR HANDLING

Industrial fans and blowers generally operate at high speeds with bearing requirements of long life and quiet operation. Dodge stocks SC, and SCM Air Handling Pillow Blocks and flange bearings that are specifically designed to meet the requirements of the air handling industry. These bearings are 100% noise tested, and have an air handling fit for long life and quiet operation. These bearings are recommended for fan and blower applications. Sizes and housing configurations not listed can be supplied on a made to order basis.

OTHER MODIFICATIONS

For applications requiring modifications not listed, we encourage you to contact our Customer Order Engineering Department at (864) 284-5700 or fax (864) 281-2317.

CONTENTS

Eccentric SXV Collar Ball Bearings

Features / Benefits B9-2
How to Order/Nomenclature B7-5
Selection B9-3
Selection/Dimensions
- Pillow Blocks
  - SXV Intermediate Duty B9-6
  - SLX Light Duty B9-19
- Flanges
  - 2-Bolt Flange B9-16
  - 3-Bolt Flange B9-18
  - 4-Bolt Flange B9-20
  - Piloted Flange B9-22
- Take-Ups
  - SXV Intermediate Duty B9-30
- Inserts
  - SXV Intermediate Duty B9-34

Modification/Accessories B9-36
Related Products
- End Closures B9-37

Part Number Index INDEX-1
Key Word Index INDEX-69

FEATURES/BENEFITS

Eccentric SXV Collar

- Eccentric Locking Collar
- Narrow Inner Ring Design
- Fiberglass Reinforced Nylon Cage
- Grade 10 Balls
- Proguard Single Lip Seal
- No Groove in Housing for End Cover
- Multiple Housing Styles Available
  P2B, F2B, F4B, WSTU, NSTU
- Bore Range
  1/2” to 2-3/16”
  20mm to 55mm

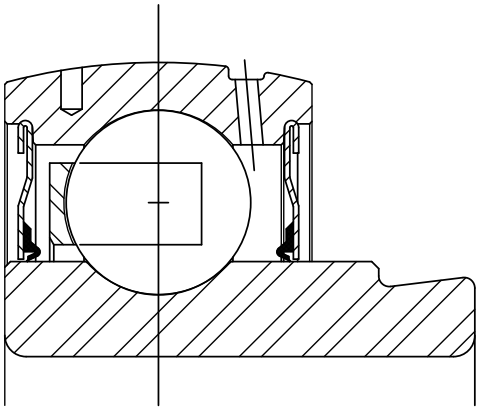

Note: Instruction manuals and drawings for Dodge bearings are available on www.dodge-pt.com

DODGE®



Eccentric SXV Collar

Recommended Torque													
Setscrews					D-LOK			Mounting Bolts					
		◆ Recommended Torque						Metal Housings		EZ-KLEEN Housed Bearings			
Setscrew Size	Key Hex Across Flats	Standard Ball Bearing Insert		Corrosion Resistant Stainless Steel	Cap Screw Size	Recom. Torque	EZ-KLEEN Recom. Torque	Bolt Size	Recom. Dry Torque (Grade 2)	2-Bolt PB, 2 & 4 Bolt Fig. and Flg. Brackets		Tapped Base PB	
		Min	Max							Bolt Size	Torque ①	Bolt Size	Torque ②
(in.)	(in.)	(in-lbs.)	(in.-lbs.)	(in.-lbs.)	(in.)	(in.-lbs.)	(in.-lbs.)	(in.)	(in.-lbs.)	(in.)	(in.-lbs.)	(in.)	(in. lbs.)
#10	3/32	28	33	25	#8-32	58	46	3/8-16	240	3/8-16	225	3/8-16	175
1/4	1/8	66	80	60	#10-32	90	72	7/16-14	384	7/16-14	350	7/16-14	350
5/16	5/32	126	156	117	1/4-28	180	144	1/2-13	600	1/2-13	500	1/2-13	400
3/8	3/16	228	275	206	5/16-24	400	320	5/8-11	1200	9/16-12	650		
7/16	7/32	342	428	321	3/8-24	750	600	3/4-10	1950	5/8-11	1000		
								7/8-9	2890				
(mm)	(mm)	(N-m)	(N-m)	(N-m)	(mm)	(N-m)	(N-m)	(mm)	(N-m)	(mm)	(N-m)		
M5	2.5	3.2	3.7	2.8	M4	585	4.68	M10	29	M8	15	①Torque for Austenitic (18-8) Stainless	
M6	3	6.2	7.7	5.8	M5	10.75	8.6	M12	50	M10	25		
M8	4	14.2	17.8	13.4	M6	20.5	16.4	M16	124	M12	50	②Max. torque values published. Do not exceed	
M10	5	26	31	23	M8	45	36	M20	238	M14	75		
M12	6	46	57	43				M22	322	M18	125		

Lubrication

High Speed Operation - In the higher speed ranges, too much grease will cause over-heating. The amount of grease that the bearing will take for a particular high speed application can only be determined by experience. If excess grease in the bearing causes overheating, it will be necessary to remove grease fitting to permit excess grease to escape. The bearing has been greased at the factory and is ready to run. When establishing a relubrication schedule, note that a small amount of grease at frequent intervals is preferable to a large amount at infrequent intervals.

◆ **NOTE:** Dodge does not recommend the use of oils or locking agents on setscrew threads. However, if utilized, the minimum installation torque values should be followed.

Lubrication Guide

Use a No. 2 Lithium complex base grease or equivalent*

Hours Run per Day	Suggested Lubrication Period in Weeks							
	1 to 250 RPM	251 to 500 RPM	501 to 750 RPM	751 to 1000 RPM	1001 to 1500 RPM	1501 to 2000 RPM	2001 to 2500 RPM	2501 to 3000 RPM
8	12	12	10	7	5	4	3	2
16	12	7	5	4	2	2	1	1
24	10	5	3	2	1	1	1	1

* For EZ-KLEEN series bearings, use an aluminum complex base grease.

Lubrication recommendations are intended for standard products applied in general operating conditions. For modified products, high temperature applications, and other anomalous applications contact product engineering at 864-284-5700.

Note: Bearing analysis program "BEST" is available on www.ptwizard.com

SELECTION



Eccentric Collar Ball Bearings - Inch and Metric

Table 2: Easy Selection Table For Ball Bearing Mounted Units

RING SIZE	SHAFT SIZE SXV,	DYNAMIC CAPACITY (lbs)	STATIC CAPACITY Co (lbs)	L_{10} LIFE, HOURS	ALLOWABLE EQUIVALENT RADIAL LOAD RATING (LBS.) AT VARIOUS RPM*							
					50	150	250	500	750	1000	1500	1750
203	1/2 5/8 17mm	2,158	1079	20,000	550	380	320	255	225	205	175	170
				30,000	480	335	280	225	195	175	155	145
				40,000	440	305	255	205	175	160	140	135
				60,000	380	265	225	175	155	140	125	115
				100,000	320	225	190	150	130	120	105	100
204	3/4 20mm	2,899	1482	20,000	740	515	435	345	300	275	240	225
				30,000	645	450	380	300	260	240	210	200
				40,000	590	410	345	275	240	215	190	180
				60,000	515	355	300	240	210	190	165	155
				100,000	435	300	255	200	175	160	140	130
205	7/8 15/16 1 25mm	3,146	1769	20,000	805	560	470	375	325	295	260	245
				30,000	705	485	410	325	285	260	225	215
				40,000	640	445	375	295	260	235	205	195
				60,000	560	385	325	260	225	205	180	170
				100,000	470	325	275	220	190	175	150	145
206	1-1/16 1-1/8 1-3/16 1-1/4 30mm	4,368	2538	20,000	1115	775	655	520	455	410	360	340
				30,000	975	675	570	455	395	360	315	300
				40,000	885	615	520	410	360	325	285	270
				60,000	775	535	455	360	315	285	250	235
				100,000	655	455	380	305	265	240	210	200
207	1-1/4 1-5/16 1-3/8 1-7/16 35mm	5,759	3461	20,000	1475	1020	860	685	595	545	475	450
				30,000	1285	890	755	595	520	475	415	395
				40,000	1170	810	685	545	475	430	375	355
				60,000	1020	710	595	475	415	375	330	310
				100,000	860	595	505	400	350	315	275	265
208	1-1/2 40mm	7,332	4475	20,000	1875	1300	1095	870	760	690	605	575
				30,000	1640	1135	960	760	665	605	525	500
				40,000	1490	1030	870	690	605	550	480	455
				60,000	1300	900	760	605	525	480	420	400
				100,000	1095	760	640	510	445	405	355	335
209	1-5/8 1-11/16 1-3/4 45mm	7,891	4906	20,000	2020	1400	1180	935	820	745	650	615
				30,000	1765	1225	1030	820	715	650	570	540
				40,000	1600	1110	935	745	650	590	515	490
				60,000	1400	970	820	650	570	515	450	430
				100,000	1180	820	690	550	480	435	380	360
210	1-15/16 2 50mm	7,891	5213	20,000	2020	1400	1180	935	820	745	650	615
				30,000	1765	1225	1030	820	715	650	570	540
				40,000	1600	1110	935	745	650	590	515	490
				60,000	1400	970	820	650	570	515	450	430
				100,000	1180	820	690	550	480	435	380	360
211	2-3/16 55mm	9,755	6588	20,000	2491	1727	1457	1156	1010	918	802	761
				30,000	2176	1509	1272	1010	882	802	700	665
				40,000	1977	1371	1156	918	802	728	636	604
				60,000	1727	1197	1010	802	700	636	556	528
				100,000	1457	1010	852	676	591	537	469	445
212	2-1/4 2-7/16	11,791	8100	20,000	3015	2090	1765	1400	1225	1110	970	925
				30,000	2635	1825	1540	1225	1070	970	880	805
				40,000	2395	1660	1400	1110	970	880	770	730
				60,000	2090	1450	1225	970	850	770	675	640
				100,000	1765	1225	1030	820	715	650	570	540
215	2-15/16	14,872	11108	20,000	3805	2640	225	1765	1545	1400	1225	1165
				30,000	3325	2305	1945	1545	1350	1225	1070	1015
				40,000	3020	2095	1765	1400	1225	1115	975	925
				60,000	2640	1830	1545	1225	1070	975	850	805
				100,000	2225	1545	1300	1035	905	820	715	680

* Slight interference fit required when operating in the shaded area

Note: Bearing analysis program "BEST" is available on www.ptwizard.com

FEATURES/BENEFITS PAGE B9-2	HOW TO ORDER/NOMENCLATURE PAGE B7-5	SELECTION/DIMENSIONS PAGE B9-6	ACCESSORIES PAGE B9-36



Eccentric Collar Ball Bearings - Inch and Metric

Table 2 (Continued): Easy Selection Table for Ball Bearing Mounted Units

RING SIZE	SHAFT SIZE SXR,SXV, SLX	DYNAMIC CAPACITY C (lbs)	STATIC CAPACITY Co (lbs)	L_{10} LIFE, HOURS	ALLOWABLE EQUIVALENT RADIAL LOAD RATING (LBS.) AT VARIOUS RPM*									
					2000	2500	3000	3500	4000	4500	5000	5500	6500	7500
203	1/2 5/8 17mm	2,158	1079	20,000	160	150	140	135	130	125	120	115	110	105
				30,000	140	130	125	115	110	105	105	100	95	90
				40,000	130	120	110	105	100	95	95	90	85	80
				60,000	110	105	95	95	90	85	80	80	75	70
				100,000	95	85	80	80	75	70	70	65	65	60
204	3/4 20mm	2,899	1482	20,000	215	200	190	180	170	165	160	155	145	140
				30,000	190	175	165	155	150	145	140	135	130	120
				40,000	170	160	150	145	135	130	125	125	115	110
				60,000	150	140	130	125	120	115	110	105	100	95
				100,000	125	115	110	105	100	90	95	90	85	80
205	7/8 15/16 1 25mm	3,146	1769	20,000	235	220	205	195	185	180	175	170	160	150
				30,000	205	190	180	170	165	155	150	145	140	130
				40,000	185	175	165	155	150	140	135	135	125	120
				60,000	165	150	140	135	130	125	120	115	110	105
				100,000	135	125	120	115	110	105	100	100	95	90
206	1-1/16 1-1/8 1-3/16 1-1/4 30mm	4,368	2538	20,000	325	305	285	270	260	250	240	235	220	
				30,000	285	265	250	235	225	220	210	205	195	
				40,000	260	240	225	215	205	200	190	185	175	
				60,000	225	210	200	190	180	175	165	160	155	
				100,000	190	175	165	160	150	145	140	135	130	
207	1-1/4 1-5/16 1-3/8 1-7/16 35mm	5,759	3461	20,000	430	400	375	355	340	330	315	305		
				30,000	375	350	330	310	300	285	275	270		
				40,000	340	315	300	285	275	260	250	245		
				60,000	300	275	260	250	235	230	220	215		
				100,000	250	235	220	210	200	190	185	180		
208	1-1/2 40mm	7,332	4475	20,000	550	510	480	455	435	420	405			
				30,000	480	445	420	400	380	365	355			
				40,000	435	405	380	360	345	330	320			
				60,000	380	355	330	315	300	290	280			
				100,000	320	300	280	265	255	245	235			
209	1-5/8 1-11/16 1-3/4 45mm	7,891	4906	20,000	590	550	515	490	470	450	435			
				30,000	515	480	450	430	410	395	380			
				40,000	470	435	410	390	370	360	345			
				60,000	410	380	360	340	325	310	300			
				100,000	345	320	300	285	275	265	255			
210	1-15/16 2 50mm	7,891	5213	20,000	590	550	515	490	470	450				
				30,000	515	480	450	430	410	395				
				40,000	470	435	410	390	370	360				
				60,000	410	380	360	340	325	310				
				100,000	345	320	300	285	275	265				
211	2-3/16 55mm	9,755	6588	20,000	729	676	636	604	578					
				30,000	636	591	556	528	505					
				40,000	578	537	505	480	459					
				60,000	505	469	441	419	401					
				100,000	426	395	372	353	338					
212	2-1/4 2-7/16	11,791	8100	20,000	880	820	770	730						
				30,000	770	715	675	640						
				40,000	700	650	610	580						
				60,000	610	570	535	510						
				100,000	515	480	450	430						
215	2-15/16	14,872	11108	20,000	1115	1035	975							
				30,000	975	905	850							
				40,000	885	820	770							
				60,000	770	715	675							
				100,000	650	605	570							

* Slight interference fit required when operating to the right of the heavy line

Note: Bearing analysis program "BEST" is available on www.ptwizard.com

FEATURES/BENEFITS PAGE B9-2	HOW TO ORDER/NOMENCLATURE PAGE B7-5	SELECTION/DIMENSIONS PAGE B9-6	ACCESSORIES PAGE B9-36

SELECTION/DIMENSIONS

Eccentric SXV Collar Ball Bearings
SXV AND SXVU INTERMEDIATE DUTY PILLOW BLOCKS

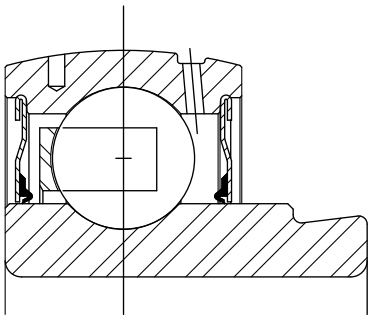

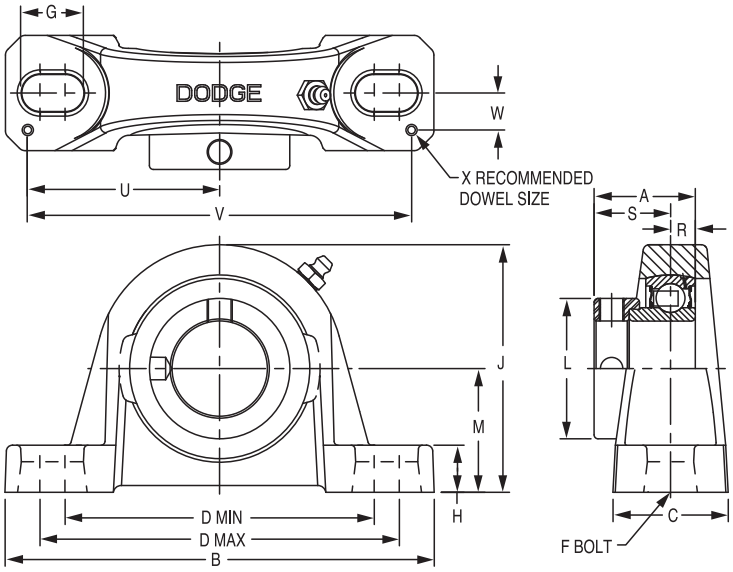

Series	Shaft Size	Standard		No Lube/Sealed for Life (-NL)	
		Part No.	Description	Part No.	Description
203	1/2	**130310**	P2B-SXV-008	**130276**	P2B-SXV-008-NL
	5/8	**130311**	P2B-SXV-010	**@**	P2B-SXV-010-NL
	17mm	***@***	*P2B-SXV-17M*	***@***	*P2B-SXV-17M-NL*
203 (SXVU)	1/2	**130324**	P2B-SXVU-008	**@**	P2B-SXVU-008-NL
	5/8	**130325**	P2B-SXVU-010	**@**	P2B-SXVU-010-NL
	17mm	***125711***	*P2B-SXVU-17M*	***@***	*P2B-SXVU-17M-NL*
204	3/4	**131970**	P2B-SXV-012	**131589**	P2B-SXV-012-NL
	20mm	***125712***	*P2B-SXV-20M*	***@***	*P2B-SXV-20M-NL*
205	7/8	**131971**	P2B-SXV-014	**053047**	P2B-SXV-014-NL
	15/16	**131972**	P2B-SXV-015	**@**	P2B-SXV-015-NL
	1	**131973**	P2B-SXV-100	**131996**	P2B-SXV-100-NL
	25mm	***125713***	*P2B-SXV-25M*	***@***	*P2B-SXV-25M-NL*
206	1-1/16	**131974**	P2B-SXV-101	**@**	P2B-SXV-101-NL
	1-1/8	**131975**	P2B-SXV-102	**@**	P2B-SXV-102-NL
	1-3/16	**131976**	P2B-SXV-103	**@**	P2B-SXV-103-NL
	1-1/4	**131977**	P2B-SXV-104S	**@**	P2B-SXV-104S-NL
	30mm	***@***	*P2B-SXV-30M*	***@***	*P2B-SXV-30M-NL*
206 (SXVU)	1-1/16	**131082**	P2B-SXVU-101	**@**	P2B-SXVU-101-NL
	1-1/8	**131083**	P2B-SXVU-102	**@**	P2B-SXVU-102-NL
	1-3/16	**131084**	P2B-SXVU-103	**053008**	P2B-SXVU-103-NL
	1-1/4	**131085**	P2B-SXVU-104S	**053042**	P2B-SXVU-104S-NL
	30mm	***125714***	*P2B-SXVU-30M*	***@***	*P2B-SXVU-30M-NL*
207	1-1/4	**131978**	P2B-SXV-104	**@**	P2B-SXV-104-NL
	1-5/16	**131979**	P2B-SXV-105	**@**	P2B-SXV-105-NL
	1-3/8	**131980**	P2B-SXV-106	**@**	P2B-SXV-106-NL
	1-7/16	**131981**	P2B-SXV-107	**058275**	P2B-SXV-107-NL
	35mm	***125715***	*P2B-SXV-35M*	***@***	*P2B-SXV-35M-NL*

@ Assembled to order

DODGE®



Eccentric SXV Collar Ball Bearings
SXV AND SXVU INTERMEDIATE DUTY PILLOW BLOCKS

Series	Shaft Size	Weight lbs. *kg.*	A	B	C	D		F Bolt Dia.	G	H	J	L	M	R	S	U	V	W	X
						min.	max.												
203	1/2	1.20	1.13	5.00	1.20	3.25	4.06	3/8	0.84	0.47	2.14	1.13	1.06	0.26	0.87	2.25	4.50	0.38	0.12
	5/8	1.10																	
	17mm	*0.50*	*28.7*	*127.0*	*30.5*	*82.6*	*103.1*	*M10*	*21.3*	*11.9*	*54.4*	*28.7*	*27.0*	*6.6*	*22.1*	*57.2*	*114.3*	*9.7*	*3.0*
203 (SXVU)	1/2	1.40	1.13	5.00	1.20	3.25	4.06	3/8	0.84	0.59	2.27	1.13	1.19	0.26	0.87	2.25	4.50	0.38	0.12
	5/8	1.20																	
	17mm	*0.60*	*28.7*	*127.0*	*30.5*	*82.6*	*103.1*	*M10*	*21.3*	*15.0*	*57.7*	*28.7*	*30.2*	*6.6*	*22.1*	*57.2*	*114.3*	*9.7*	*3.0*
204	3/4	1.40	1.22	5.25	1.34	3.38	4.19	3/8	0.85	0.53	2.56	1.31	1.31	0.30	0.92	2.25	4.50	0.50	0.12
	20mm	*0.60*	*31.0*	*133.4*	*34.0*	*85.9*	*106.4*	*M10*	*21.6*	*13.5*	*65.0*	*33.3*	*33.3*	*7.6*	*23.4*	*57.2*	*114.3*	*12.7*	*3.0*
205	7/8	1.90	1.22	5.50	1.40	3.69	4.50	3/8	0.85	0.58	2.77	1.50	1.44	0.30	0.92	2.50	5.00	0.50	0.12
	15/16	1.80																	
	1	1.70																	
	25mm	*0.80*	*31.0*	*139.7*	*35.6*	*93.7*	*114.3*	*M10*	*21.6*	*14.7*	*70.4*	*38.1*	*36.5*	*7.6*	*23.4*	*63.5*	*127.0*	*12.7*	*3.0*
206	1-1/16	2.90	1.41	6.25	1.75	4.25	5.00	1/2	0.94	0.68	3.25	1.75	1.63	0.35	1.05	2.88	5.76	0.56	0.12
	1-1/8	2.80																	
	1-3/16	2.70																	
	1-1/4	2.60																	
	30mm	*1.20*	*35.8*	*158.8*	*44.5*	*108.0*	*127.0*	*M12*	*23.9*	*17.3*	*82.6*	*44.5*	*41.3*	*8.9*	*26.7*	*73.2*	*146.3*	*14.2*	*3.0*
206 (SXVU)	1-1/16	3.00	1.41	6.25	1.75	4.25	5.00	1/2	0.94	0.75	3.31	1.75	1.69	0.35	1.05	2.88	5.76	0.56	0.12
	1-1/8	2.90																	
	1-3/16	2.80																	
	1-1/4	2.70																	
	30mm	*1.20*	*35.8*	*158.8*	*44.5*	*108.0*	*127.0*	*M12*	*23.9*	*19.1*	*84.1*	*44.5*	*42.9*	*8.9*	*26.7*	*73.2*	*146.3*	*14.2*	*3.0*
207	1-1/4	4.40	1.53	6.50	1.75	4.68	5.44	1/2	0.94	0.71	3.75	2.13	1.88	0.37	1.16	2.91	5.82	0.56	0.12
	1-5/16	4.30																	
	1-3/8	4.30																	
	1-7/16	4.20																	
	35mm	*1.90*	*38.9*	*165.1*	*44.5*	*118.9*	*138.2*	*M12*	*23.9*	*18.0*	*95.3*	*54.1*	*47.6*	*9.4*	*29.5*	*73.9*	*147.8*	*14.2*	*3.0*

FEATURES/BENEFITS PAGE B9-2	SELECTION PAGE B9-6	HOW TO ORDER/NOMENCLATURE PAGE B7-5	MODIFICATIONS/ACCESSORIES PAGE B9-36

SELECTION/DIMENSIONS

Eccentric SXV Collar Ball Bearings
SXV AND SXVU INTERMEDIATE DUTY PILLOW BLOCKS

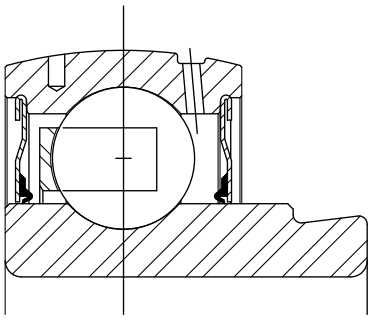

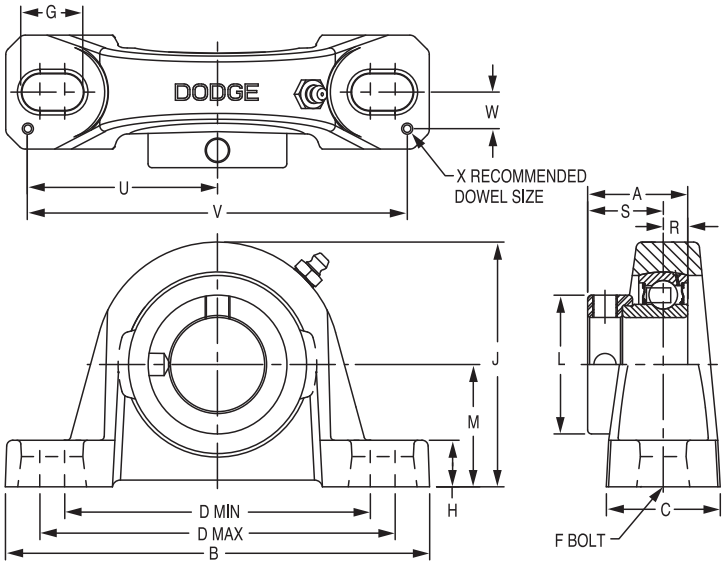

Series	Shaft Size	Standard		No Lube/Sealed for Life (-NL)	
		Part No.	Description	Part No.	Description
208	1-1/2	**131982**	P2B-SXV-108	**@**	P2B-SXV-108-NL
	40mm	***@***	*P2B-SXV-40M*	***@***	*P2B-SXV-40M-NL*
209	1-11/16	**130312**	P2B-SXV-111	**@**	P2B-SXV-111-NL
	1-3/4	**130313**	P2B-SXV-112	**@**	P2B-SXV-112-NL
	45mm	***125717***	*P2B-SXV-45M*	***@***	*P2B-SXV-45M-NL*
210	1-15/16	**130314**	P2B-SXV-115	**@**	P2B-SXV-115-NL
	2	**130315**	P2B-SXV-200	**065636**	P2B-SXV-200-NL
	50mm	***125718***	*P2B-SXV-50M*	***@***	*P2B-SXV-50-NL*
211	2	**130316**	P2B-SXV-200L	**@**	P2B-SXV-200L-NL
	2-3/16	**130317**	P2B-SXV-203	**@**	P2B-SXV-203-NL
	55mm	***125719***	*P2B-SXV-55M*	***@***	*P2B-SXV-55M-NL*

@ Assembled to order



Eccentric SXV Collar Ball Bearings
SXV AND SXVU INTERMEDIATE DUTY PILLOW BLOCKS

Series	Shaft Size	Weight lbs. *kg.*	A	B	C	D		F Bolt Dia.	G	H	J	L	M	R	S	U	V	W	X
						min.	max.												
208	1-1/2	5.1	1.72	7.25	1.93	5.18	5.88	1/2	0.91	0.93	4.19	2.38	2.13	0.43	1.28	3.26	6.52	0.69	0.12
	40mm	*2.3*	*43.6*	*184.2*	*49.0*	*131.6*	*149.4*	*M12*	*23.1*	*23.6*	*106.4*	*60.5*	*54.0*	*11.0*	*32.6*	*82.8*	*165.6*	*17.5*	*3.0*
209	1-11/16	5.5	1.69	7.44	2.00	5.50	6.19	1/2	0.90	0.75	4.28	2.50	2.13	0.43	1.26	3.38	6.76	0.69	0.12
	1-3/4	5.4																	
	45mm	*2.5*	*42.9*	*189.0*	*50.8*	*139.7*	*157.2*	*M12*	*22.9*	*19.1*	*108.7*	*63.5*	*54.0*	*10.9*	*32.0*	*85.9*	*171.7*	*17.5*	*3.0*
210	1-15/16	5.8	1.72	8.12	2.25	6.00	6.68	5/8	1.02	0.75	4.53	2.50	2.25	0.43	1.29	3.69	7.38	0.81	0.12
	2	5.7																	
	50mm	*2.6*	*43.6*	*206.2*	*57.2*	*152.4*	*169.7*	*M16*	*25.9*	*19.1*	*115.1*	*63.5*	*57.2*	*11.0*	*32.7*	*93.7*	*187.5*	*20.6*	*3.0*
211	2	7.9	1.90	8.88	2.30	6.38	7.44	5/8	1.21	0.88	4.96	2.75	2.75	0.47	1.43	3.94	7.88	0.81	0.12
	2-3/16	7.6																	
	50mm	*3.5*	*48.3*	*225.6*	*58.4*	*162.1*	*189.0*	*M16*	*30.7*	*22.4*	*126.0*	*69.9*	*69.9*	*12.0*	*36.4*	*100.1*	*200.2*	*20.6*	*3.0*

FEATURES/BENEFITS PAGE B9-2	SELECTION PAGE B9-6	HOW TO ORDER/NOMENCLATURE PAGE B7-5	MODIFICATIONS/ACCESSORIES PAGE B9-36

SELECTION/DIMENSIONS

Eccentric SXV Collar Ball Bearings
SXVB INTERMEDIATE DUTY PILLOW BLOCKS

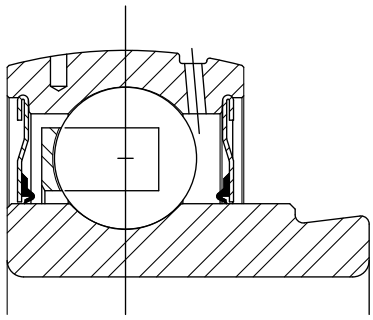

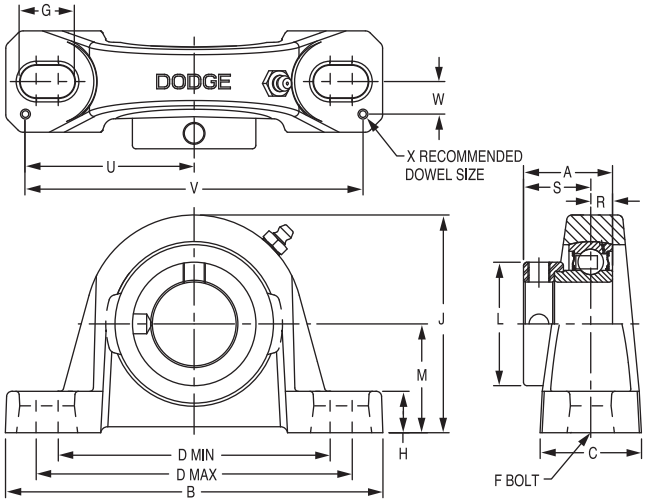

Series	Shaft Size	Standard	
		Part No.	Description
203 (SXV)	1/2	**130310**	P2B-SXV-008
	5/8	**130311**	P2B-SXV-010
	17mm	***@***	*P2B-SXV-17M*
204	3/4	**131983**	P2B-SXVB-012
	20mm	***@***	*P2B-SXVB-20M*
205	7/8	**131984**	P2B-SXVB-014
	15/16	**131985**	P2B-SXVB-015
	1	**131986**	P2B-SXVB-100
	25mm	***@***	*P2B-SXVB-25M*
206	1-1/16	**131987**	P2B-SXVB-101
	1-1/8	**131988**	P2B-SXVB-102
	1-3/16	**131989**	P2B-SXVB-103
	1-1/4	**131990**	P2B-SXVB-104S
	30mm	***056830***	*P2B-SXVB-30M*
207	1-1/4	**131991**	P2B-SXVB-104
	1-5/16	**131992**	P2B-SXVB-105
	1-3/8	**131993**	P2B-SXVB-106
	1-7/16	**131994**	P2B-SXVB-107
	35mm	***068864***	*P2B-SXVB-35M*
208	1-1/2	**131995**	P2B-SXVB-108
	40mm	***125716***	*P2B-SXVB-40M*
209	1-11/16	**130318**	P2B-SXVB-111
	1-3/4	**130319**	P2B-SXVB-112
	45mm	***@***	*P2B-SXVB-45M*
210	1-15/16	**130320**	P2B-SXVB-115
	2	**130321**	P2B-SXVB-200
	50mm	***@***	*P2B-SXVB-50M*
211	2	**130322**	P2B-SXVB-200L
	2-3/16	**130323**	P2B-SXVB-203
	55mm	***@***	*P2B-SXVB-55M*

@ Assembled to order



Eccentric SXV Collar Ball Bearings
SXVB INTERMEDIATE DUTY PILLOW BLOCKS

Series	Shaft Size	Weight lbs. *kg.*	A	B	C	D		F Bolt Dia.	G	H	J	L	M	R	S	U	V	W	X
						min.	max.												
203 (SXV)	1/2	1.1	1.13	5.00	1.20	3.25	4.06	3/8	0.84	0.47	2.14	1.13	1.06	0.26	0.87	2.25	4.50	0.38	0.12
	5/8	1.0																	
	17mm	*0.5*	*28.7*	*127.0*	*30.5*	*82.6*	*103.1*	*M10*	*21.3*	*11.9*	*54.4*	*28.7*	*26.9*	*6.6*	*22.1*	*57.2*	*114.3*	*9.7*	*3.0*
204	3/4	1.3	1.22	5.25	1.34	3.38	4.19	3/8	0.85	0.47	2.49	1.31	1.25	0.30	0.92	2.25	4.50	0.50	0.12
	20mm	*0.6*	*31.0*	*133.4*	*34.0*	*85.9*	*106.4*	*M10*	*21.6*	*11.9*	*63.2*	*33.3*	*31.8*	*7.6*	*23.4*	*57.2*	*114.3*	*12.7*	*3.0*
205	7/8	1.8	1.22	5.50	1.40	3.69	4.50	3/8	0.85	0.45	2.64	1.50	1.31	0.30	0.92	2.50	5.00	0.50	0.12
	15/16	1.7																	
	1	1.6																	
	25mm	*0.7*	*31.0*	*139.7*	*35.6*	*93.7*	*114.3*	*M10*	*21.6*	*11.4*	*67.1*	*38.1*	*33.3*	*7.6*	*23.4*	*63.5*	*127.0*	*12.7*	*3.0*
206	1-1/16	2.8	1.41	6.25	1.75	4.25	5.00	1/2	0.94	0.62	3.19	1.75	1.56	0.35	1.05	2.88	5.76	0.56	0.12
	1-1/8	2.7																	
	1-3/16	2.6																	
	1-1/4	2.5																	
	30mm	*1.2*	*35.8*	*158.8*	*44.5*	*108.0*	*127.0*	*M12*	*23.9*	*15.8*	*81.0*	*44.5*	*39.6*	*8.9*	*26.7*	*73.2*	*146.3*	*14.2*	*3.0*
207	1-1/4	4.3	1.53	6.50	1.75	4.68	5.44	1/2	0.94	0.65	3.69	2.13	1.81	0.37	1.16	2.91	5.82	0.56	0.12
	1-5/16	4.2																	
	1-3/8	4.2																	
	1-7/16	4.1																	
	35mm	*1.9*	*38.9*	*165.1*	*44.5*	*118.9*	*138.2*	*M12*	*23.9*	*16.5*	*93.7*	*54.1*	*46.0*	*9.4*	*29.5*	*73.9*	*147.8*	*14.2*	*3.0*
208	1-1/2	5.0	1.72	7.25	1.93	5.18	5.88	1/2	0.91	0.75	4.00	2.38	1.94	0.43	1.28	3.26	6.52	0.69	0.12
	40mm	*2.2*	*43.6*	*184.2*	*49.0*	*131.6*	*149.4*	*M12*	*23.1*	*19.1*	*101.6*	*60.5*	*49.3*	*11.0*	*32.6*	*82.8*	*165.6*	*17.5*	*3.0*
209	1-11/16	5.4	1.69	7.44	2.00	5.50	6.19	1/2	0.90	0.69	4.21	2.50	2.06	0.43	1.26	3.38	6.76	0.69	0.12
	1-3/4	5.3																	
	45mm	*2.4*	*42.9*	*189.0*	*50.8*	*139.7*	*157.2*	*M12*	*22.9*	*17.5*	*106.9*	*63.5*	*52.3*	*10.9*	*32.0*	*85.9*	*171.7*	*17.5*	*3.0*
210	1-15/16	5.7	1.72	8.12	2.25	6.00	6.68	5/8	1.02	0.68	4.47	2.50	2.19	0.43	1.29	3.69	7.38	0.81	0.12
	2	5.6																	
	50mm	*2.5*	*43.6*	*206.2*	*57.2*	*152.4*	*169.7*	*M16*	*25.9*	*17.3*	*113.5*	*63.5*	*55.6*	*11.0*	*32.7*	*93.7*	*187.5*	*20.6*	*3.0*
211	2	7.8	1.90	8.88	2.30	6.38	7.44	5/8	1.21	0.81	4.90	2.75	2.44	0.47	1.43	3.94	7.88	0.81	0.12
	2-3/16	7.5																	
	55mm	*3.4*	*48.3*	*225.6*	*58.4*	*162.1*	*189.0*	*M16*	*30.7*	*20.6*	*124.5*	*69.9*	*62.0*	*12.0*	*36.4*	*100.1*	*200.2*	*20.6*	*3.0*

FEATURES/BENEFITS PAGE B9-2	SELECTION PAGE B9-6	HOW TO ORDER/NOMENCLATURE PAGE B7-5	MODIFICATIONS/ACCESSORIES PAGE B9-36

SELECTION/DIMENSIONS

Eccentric SXV Collar Ball Bearings
SXV INTERMEDIATE DUTY TAPPED BASE PILLOW BLOCKS

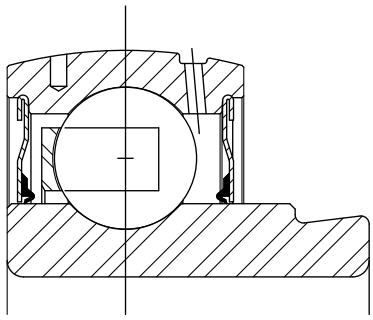

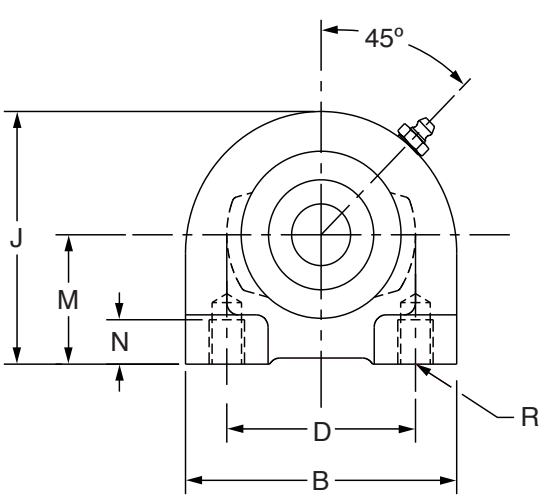

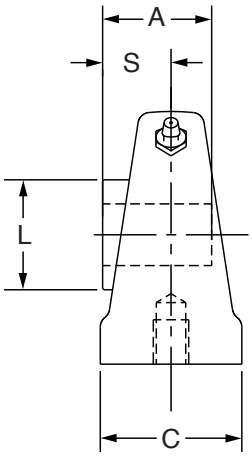

Series	Shaft Size	Part No.	Description
204	3/4	@	TB-SXV-012
	20mm	***130769***	*TB-SXV-20M*
205	7/8	@	TB-SXV-014
	15/16	@	TB-SXV-015
	1	**124474**	TB-SXV-100
	25mm	***130770***	*TB-SXV-25M*
206	1-1/16	@	TB-SXV-101
	1-1/8	@	TB-SXV-102
	1-3/16	@	TB-SXV-103
	1-1/4	@	TB-SXV-104S
	30mm	***130771***	*TB-SXV-30M*
207	1-1/4	@	TB-SXV-104
	1-5/16	@	TB-SXV-105
	1-3/8	@	TB-SXV-106
	1-7/16	@	TB-SXV-107
	35mm	***130772***	*TB-SXV-35M*
208	1-1/2	**068747**	TB-SXV-108
	40mm	***130773***	*TB-SXV-40M*
209	1-11/16	**068400**	TB-SXV-111
	1-3/4	@	TB-SXV-112
	45mm	***130774***	*TB-SXV-45M*
210	1-15/16	@	TB-SXV-115
	2	@	TB-SXV-200
	50mm	***130775***	*TB-SXV-50M*
211	2	@	TB-SXV-200L
	2-3/16	**064483**	TB-SXV-203
	55mm	@	*TB-SXV-55M*

@ Assemble to order

DODGE®



Eccentric SXV Collar Ball Bearings
SXV INTERMEDIATE DUTY TAPPED BASE PILLOW BLOCKS

Series	Shaft Size	Weight lbs. *kg*	A	B	C	D	J	L	M	N Min. Tap Depth	R Bolt Hole UNC-Thread	S
204	3/4	1.5	1.22	2.88	1.50	2.00	2.56	1.31	1.31	0.50	3/8-16	0.92
	20mm	*0.6*	*31.0*	*73.2*	*38.1*	*50.8*	*65.0*	*33.3*	*33.4*	*12.7*	*M8x1.25*	*23.4*
205	7/8	2.2	1.22	3.00	1.50	2.00	2.81	1.50	1.44	0.50	3/8-16	0.92
	15/16	2.1										
	1	2										
	25mm	*0.8*	*31.0*	*76.2*	*38.1*	*50.8*	*71.4*	*38.1*	*36.5*	*12.7*	*M10x1.5*	*23.4*
206	1-1/16	3.2	1.41	4.00	1.50	3.00	3.38	1.75	1.69	0.63	7/16-14	1.05
	1-1/8	3										
	1-3/16	2.8										
	1-1/4	2.6										
	30mm	*1.1*	*35.8*	*101.6*	*38.1*	*76.2*	*85.9*	*44.5*	*42.9*	*16.0*	*M10x1.5*	*26.7*
207	1-1/4	4.4	1.53	4.25	1.88	3.25	3.75	2.13	1.88	0.75	1/2-13	1.16
	1-5/16	4.2										
	1-3/8	4										
	1-7/16	3.8										
	35mm	*1.4*	*38.9*	*108.0*	*47.8*	*82.6*	*95.3*	*54.1*	*47.6*	*19.1*	*M10x1.5*	*29.5*
208	1-1/2	4.8	1.72	4.63	1.88	3.50	3.94	2.38	1.94	0.75	1/2-13	1.28
	40mm	*1.8*	*43.6*	*117.6*	*47.8*	*88.9*	*100.1*	*60.5*	*49.2*	*19.1*	*M12x1.75*	*32.6*
209	1-11/16	5.7	1.69	5.00	2.00	3.75	4.25	2.50	2.13	0.75	1/2-13	1.26
	1-3/4	5.5										
	45mm	*2.1*	*42.9*	*127.0*	*50.8*	*95.3*	*108.0*	*63.5*	*54.0*	*19.1*	*M12x1.75*	*32.0*
210	1-15/16	6.5	1.72	5.50	2.00	4.00	4.63	2.75	2.25	0.88	5/8-11	1.29
	2	6.3										
	50mm	*2.4*	*43.6*	*139.7*	*50.8*	*101.6*	*117.6*	*69.9*	*57.2*	*22.4*	*M16x2*	*32.7*
211	2	9.2	1.90	5.50	2.00	4.00	4.63	3.00	2.25	0.88	5/8-11	1.43
	2-3/16	9										
	55mm	*3.3*	*48.3*	*139.7*	*50.8*	*101.6*	*117.6*	*76.2*	*57.2*	*22.4*	*M16x2*	*36.4*

FEATURES/BENEFITS PAGE B9-2	SELECTION PAGE B9-6	HOW TO ORDER/NOMENCLATURE PAGE B7-5	MODIFICATIONS/ACCESSORIES PAGE B9-36

SELECTION/DIMENSIONS

Eccentric Collar Ball Bearings
SLX LIGHT DUTY PILLOW BLOCKS

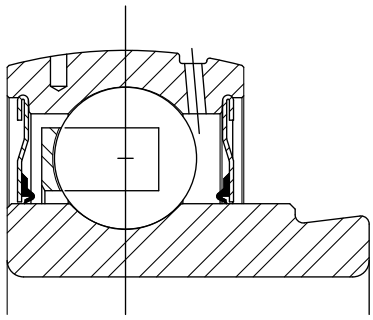

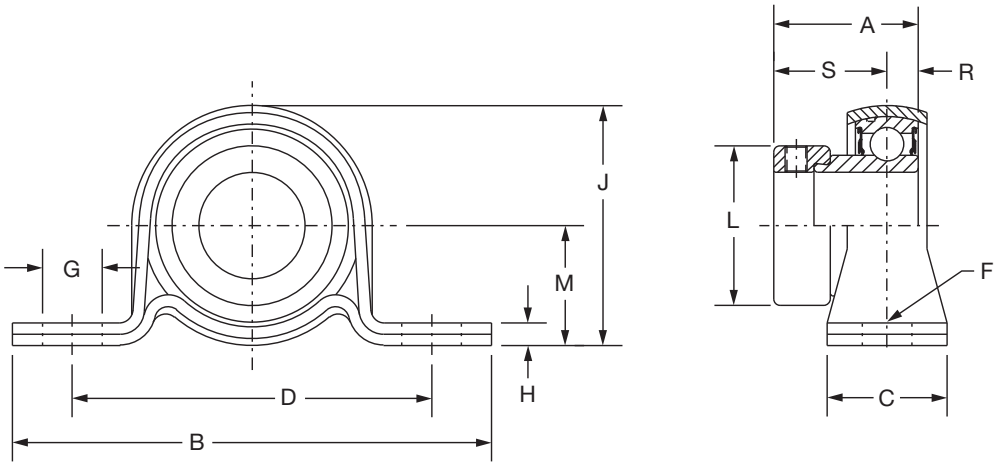

Series	Shaft Size	Part No.	Description
203	1/2	@	P2B-SLX-008
	5/8	**052932**	P2B-SLX-010
	17mm	@	*P2B-SLX-17M*
204	3/4	**128130**	P2B-SLX-012
	20mm	@	*P2B-SLX-20M*
205	7/8	**128131**	P2B-SLX-014
	15/16	**128132**	P2B-SLX-015
	1	**128133**	P2B-SLX-100
	25mm	@	*P2B-SLX-25M*
206	1-1/8	**128134**	P2B-SLX-102
	1-3/16	**128135**	P2B-SLX-103
	1-1/4	**128136**	P2B-SLX-104S
	30mm	@	*P2B-SLX-30M*
207	1-1/4	**128183**	P2B-SLX-104
	1-3/8	**128184**	P2B-SLX-106
	1-7/16	**128185**	P2B-SLX-107
	35mm	@	*P2B-SLX-35M*

@ Assembled to order.

DODGE®



Eccentric Collar Ball Bearings
SLX LIGHT DUTY PILLOW BLOCKS

Series	Shaft Size	Weight lbs *kg*	A	B	C	D	F Bolt Dia.	G	H	J	L	M	R	S	Housing Radial Load Rating (lbs)
203	1/2	0.52	1.13	3.63	1.00	2.69	1/4	0.50	0.13	1.75	1.13	0.88	0.26	0.87	250
	5/8	0.50													
	17mm	*.23*	28.7	92.2	25.4	68.3	M6	12.7	3.3	44.5	28.7	22.4	6.6	22.1	*1,112*
204	3/4	0.61	1.22	4.13	1.00	3.00	3/8	0.50	0.15	2.06	1.31	1.00	0.30	0.92	350
	20mm	*.27*	31.0	104.9	25.4	76.2	M10	12.7	3.8	52.3	33.3	25.4	7.6	23.4	*1,556*
205	7/8	0.79	1.22	4.50	1.13	3.38	3/8	0.56	0.21	2.22	1.50	1.13	0.30	0.92	400
	15/16	0.76													
	1	0.73													
	25mm	*.34*	31.0	114.3	28.7	85.9	M10	14.2	5.3	56.4	38.1	28.7	7.6	23.4	*1,779*
206	1-1/8	1.14	1.41	4.88	1.25	3.75	3/8	0.56	0.24	2.62	1.75	1.31	0.35	1.05	600
	1-3/16	1.12													
	1-1/4	1.10													
	30mm	*.50*	35.8	124.0	31.8	95.3	M10	14.2	6.1	66.5	44.5	33.3	8.9	26.7	*2,668*
207	1-1/4	1.54	1.53	5.75	1.25	4.25	1/2	0.75	0.24	3.12	2.13	1.56	0.37	1.16	800
	1-3/8	1.50													
	1-7/16	1.48													
	35mm	*.67*	38.9	146.1	31.8	108.0	M12	19.1	6.1	79.2	54.1	39.6	9.4	29.5	*3,557*

FEATURES/BENEFITS PAGE B9-2	SELECTION PAGE B9-6	HOW TO ORDER/NOMENCLATURE PAGE B7-5	MODIFICATIONS/ACCESSORIES PAGE B9-36

SELECTION/DIMENSIONS

Eccentric SXV Collar Ball Bearings
SXV INTERMEDIATE DUTY 2-BOLT FLANGE BEARINGS

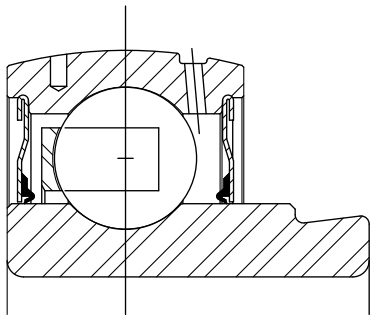

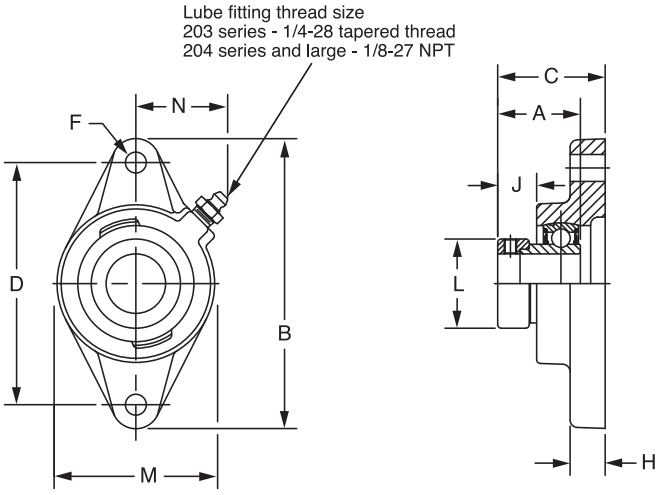

Series	Shaft Size	Standard		No Lube/Sealed for Life (-NL)	
		Part No.	Description	Part No.	Description
203	1/2	**130326**	F2B-SXV-008	**@**	F2B-SXV-008-NL
	5/8	**130327**	F2B-SXV-010	**@**	F2B-SXV-010-NL
	17mm	***125529***	*F2B-SXV-17M*	***@***	*F2B-SXV-17M-NL*
204	3/4	**131737**	F2B-SXV-012	**@**	F2B-SXV-012-NL
	20mm	***125730***	*F2B-SXV-20M*	***@***	*F2B-SXV-20M-NL*
205	7/8	**131738**	F2B-SXV-014	**@**	F2B-SXV-014-NL
	15/16	**131739**	F2B-SXV-015	**@**	F2B-SXV-015-NL
	1	**131740**	F2B-SXV-100	**058778**	F2B-SXV-100-NL
	25mm	***125731***	*F2B-SXV-25M*	***@***	*F2B-SXV-25M-NL*
206	1-1/16	**131741**	F2B-SXV-101	**@**	F2B-SXV-101-NL
	1-1/8	**131742**	F2B-SXV-102	**@**	F2B-SXV-102-NL
	1-3/16	**131743**	F2B-SXV-103	**@**	F2B-SXV-103-NL
	1-1/4	**131744**	F2B-SXV-104S	**@**	F2B-SXV-104S-NL
	30mm	***125732***	*F2B-SXV-30M*	***@***	*F2B-SXV-30M-NL*
207	1-1/4	**131745**	F2B-SXV-104	**@**	F2B-SXV-104-NL
	1-5/16	**131746**	F2B-SXV-105	**@**	F2B-SXV-105-NL
	1-3/8	**131747**	F2B-SXV-106	**@**	F2B-SXV-106-NL
	1-7/16	**131748**	F2B-SXV-107	**058779**	F2B-SXV-107-NL
	35mm	***125733***	*F2B-SXV-35M*	***@***	*F2B-SXV-35M-NL*
208	1-1/2	**131749**	F2B-SXV-108	**068784**	F2B-SXV-108-NL
	40mm	***125734***	*F2B-SXV-40M*	***@***	*F2B-SXV-40M-NL*
209	1-11/16	**130328**	F2B-SXV-111	**059595**	F2B-SXV-111-NL
	1-3/4	**130329**	F2B-SXV-112	**@**	F2B-SXV-112-NL
	45mm	***125735***	*F2B-SXV-45M*	***@***	*F2B-SXV-45M-NL*
210	1-15/16	**130330**	F2B-SXV-115	**059596**	F2B-SXV-115-NL
	2	**130331**	F2B-SXV-200	**068867**	F2B-SXV-200-NL
	50mm	***125736***	*F2B-SXV-50M*	*@*	*F2B-SXV-50M-NL*
211	2	**130352**	F2B-SXV-200L	**@**	F2B-SXV-200L-NL
	2-3/16	**130353**	F2B-SXV-203	**@**	F2B-SXV-203-NL
	55mm	***125737***	*F2B-SXV-55M*	***@***	*F2B-SXV-55M-NL*

@ Assembled to order



Eccentric SXV Collar Ball Bearings

SXV INTERMEDIATE DUTY 2-BOLT FLANGE BEARINGS

Series	Shaft Size	Weight lbs *kg*	A	B	C	D	F Bolt Dia.	H	J	L	M	N
203	1/2	0.9	1.13	3.88	1.40	3.00	3/8	0.38	0.55	1.13	2.13	1.13
	5/8	0.8										
	17mm	*0.3*	*28.7*	*98.6*	*35.6*	*76.2*	*M10*	*9.7*	*14.0*	*28.7*	*54.1*	*28.7*
204	3/4	1.0	1.22	4.41	1.54	3.53	3/8	0.50	0.55	1.31	2.38	1.50
	20mm	*0.5*	*31.0*	*112.0*	*39.1*	*89.7*	*M10*	*12.7*	*14.0*	*33.3*	*60.5*	*38.1*
205	7/8	1.7	1.22	4.88	1.51	3.89	7/16	0.52	0.56	1.50	2.75	1.44
	15/16	1.6										
	1	1.5										
	25mm	*0.7*	*31.0*	*124.0*	*38.4*	*98.8*	*M10*	*13.2*	*14.2*	*38.1*	*69.9*	*36.6*
206	1-1/16	2.4	1.41	5.56	1.67	4.59	7/16	0.50	0.61	1.75	3.13	1.56
	1-1/8	2.3										
	1-3/16	2.2										
	1-1/4	2.1										
	30mm	*1*	*35.8*	*141.2*	*42.4*	*116.7*	*M10*	*12.7*	*15.5*	*44.5*	*79.5*	*39.6*
207	1-1/4	3.6	1.53	6.13	1.87	5.12	1/2	0.56	0.65	2.13	3.75	1.84
	1-5/16	3.5										
	1-3/8	3.3										
	1-7/16	3.2										
	35mm	*1.5*	*38.9*	*155.7*	*47.5*	*130.0*	*M12*	*14.2*	*16.5*	*54.1*	*95.3*	*46.7*
208	1-1/2	4.7	1.72	6.75	2.07	5.66	1/2	0.56	0.73	2.38	4.13	1.83
	40mm	*2.2*	*43.6*	*171.5*	*52.6*	*143.8*	*M12*	*14.2*	*18.5*	*60.5*	*104.9*	*46.5*
209	1-11/16	5.1	1.69	7.06	2.07	5.84	1/2	0.63	0.66	2.50	4.38	1.91
	1-3/4	4.9										
	45mm	*2.2*	*42.9*	*179.3*	*52.6*	*148.3*	*M14*	*16.0*	*16.8*	*63.5*	*111.3*	*48.5*
210	1-15/16	5.8	1.72	7.44	2.12	6.19	1/2	0.63	0.65	2.75	4.56	2.03
	2	5.3										
	50mm	*2.4*	*43.6*	*189.0*	*53.8*	*157.2*	*M16*	*16.0*	*16.5*	*69.9*	*115.8*	*51.6*
211	2	6.9	1.90	8.63	2.36	7.25	5/8	0.67	0.77	3.00	5.25	2.27
	2-3/16	6.7										
	55mm	*3.1*	*48.3*	*219.2*	*59.9*	*184.2*	*M16*	*17.0*	*19.6*	*76.2*	*133.4*	*57.7*

FEATURES/BENEFITS PAGE B9-2	SELECTION PAGE B9-6	HOW TO ORDER/NOMENCLATURE PAGE B7-5	MODIFICATIONS/ACCESSORIES PAGE B9-36

SELECTION/DIMENSIONS

Eccentric Collar Ball Bearings
SXV LFT INTERMEDIATE DUTY 2-BOLT FLANGE BEARINGS

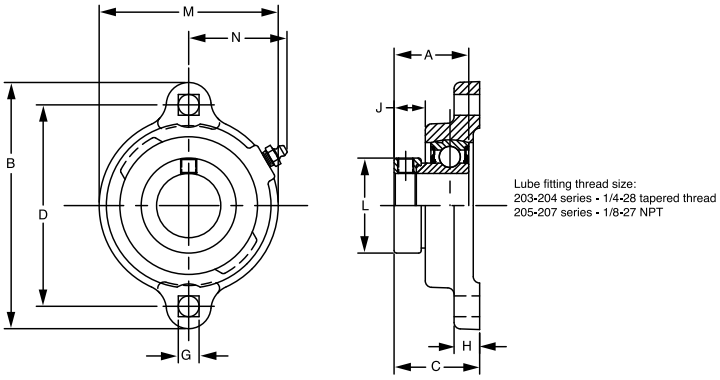

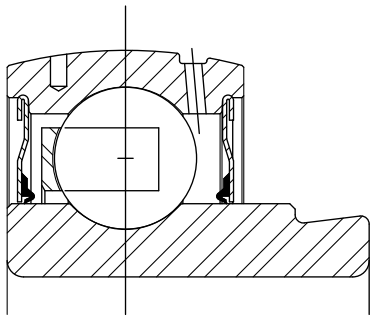

Series	Shaft Size	Standard		No Lube/Sealed for Life (-NL)	
		Part No.	Description	Part No.	Description
203	1/2	@	LFT-SXV-008	124748	LFT-SXV-008-NL
	5/8	124749	LFT-SXV-010	068855	LFT-SXV-010-NL
	17mm	***130776***	*LFT-SXV-17M*	@	*LFT-SXV-17M-NL*
204	3/4	@	LFT-SXV-012	124678	LFT-SXV-012-NL
	20mm	***130777***	*LFT-SXV-20M*	@	*LFT-SXV-20M-NL*
205	7/8	049751	LFT-SXV-014	@	LFT-SXV-014-NL
	15/16	@	LFT-SXV-015	@	LFT-SXV-015-NL
	1	124677	LFT-SXV-100	124697	LFT-SXV-100-NL
	25mm	***130778***	*LFT-SXV-25M*	@	*LFT-SXV-25M-NL*
206	1-1/16	@	LFT-SXV-101	@	LFT-SXV-101-NL
	1-1/8	068387	LFT-SXV-102	@	LFT-SXV-102-NL
	1-3/16	068803	LFT-SXV-103	053007	LFT-SXV-103-NL
	1-1/4	068561	LFT-SXV-104S	062945	LFT-SXV-104S-NL
	30mm	***130779***	*LFT-SXV-30M*	@	*LFT-SXV-30M-NL*
207	1-1/4	@	LFT-SXV-104	@	LFT-SXV-104-NL
	1-5/16	@	LFT-SXV-105	@	LFT-SXV-105-NL
	1-3/8	062439	LFT-SXV-106	@	LFT-SXV-106-NL
	1-7/16	064750	LFT-SXV-107	124676	LFT-SXV-107-NL
	35mm	***130780***	*LFT-SXV-35M*	@	*LFT-SXV-35M-NL*

@ Assembled to order

Series	Shaft Size	Weight lbs *kg*	A	B	C	D	G	H	J	L	M	N
203	1/2	0.63	1.13	3.19	1.28	2.50	0.28	0.38	0.56	1.13	2.13	1.23
	5/8	0.60										
	17mm	*0.3*	*28.7*	*81.0*	*32.5*	*63.5*	*7.1*	*9.7*	*14.2*	*28.7*	*54.1*	*31.2*
204	3/4	0.77	1.22	3.56	1.41	2.81	0.34	0.42	0.56	1.31	2.38	1.34
	20mm	*0.4*	*31.0*	*90.4*	*35.8*	*71.4*	*8.6*	*10.7*	*14.2*	*33.3*	*60.5*	*34.0*
205	7/8	0.92	1.22	3.75	1.40	3.00	0.34	0.42	0.53	1.31	2.63	1.44
	15/16	0.89										
	1	0.86										
	25mm	*0.4*	*31.0*	*95.3*	*35.6*	*76.2*	*8.6*	*10.7*	*13.5*	*33.3*	*66.8*	*36.6*
206	1-1/16	1.53	1.41	4.44	1.60	3.56	0.41	0.47	0.61	1.75	3.25	1.72
	1-1/8	1.5										
	1-3/16	1.47										
	1-1/4	1.44										
	30mm	*0.7*	*35.8*	*112.8*	*40.6*	*90.4*	*10.4*	*11.9*	*15.5*	*44.5*	*82.6*	*43.7*
207	1-1/4	1.92	1.53	4.82	1.72	3.94	0.41	0.50	0.65	2.13	3.50	1.83
	1-5/16	1.89										
	1-3/8	1.86										
	1-7/16	1.83										
	35mm	*0.8*	*38.9*	*122.4*	*43.7*	*100.1*	*10.4*	*12.7*	*16.5*	*54.1*	*88.9*	*46.5*

FEATURES/BENEFITS PAGE B9-2 | SELECTION PAGE B9-6 | HOW TO ORDER/NOMENCLATURE PAGE B7-5 | MODIFICATIONS/ACCESSORIES PAGE B9-36

DODGE®



Eccentric Collar Ball Bearings
SLX LIGHT DUTY 2-BOLT FLANGE BEARINGS

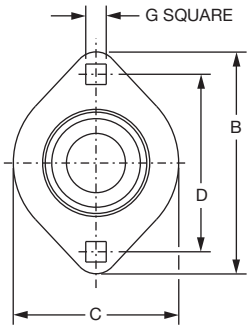

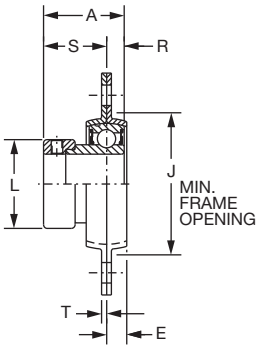

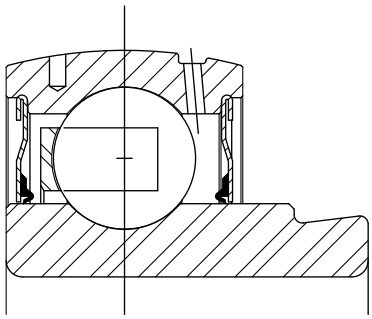

Series	Shaft Size	Standard	
		Part No.	Description
203	1/2	@	F2B-SLX-008
	5/8	**062497**	F2B-SLX-010
	17mm	@	*F2B-SLX-17M*
204	3/4	**128137**	F2B-SLX-012
	20mm	@	*F2B-SLX-20M*
205	7/8	**128138**	F2B-SLX-014
	15/16	**128139**	F2B-SLX-015
	1	**128140**	F2B-SLX-100
	25mm	@	*F2B-SLX-25M*
206	1-1/8	**128141**	F2B-SLX-102
	1-3/16	**128142**	F2B-SLX-103
	1-1/4	**128143**	F2B-SLX-104S
	30mm	@	*F2B-SLX-30M*
207	1-1/4	**128186**	F2B-SLX-104
	1-3/8	**128187**	F2B-SLX-106
	1-7/16	**128188**	F2B-SLX-107
	35mm	@	*F2B-SLX-35M*

@ Assembled to order

Series	Shaft Size	Weight lbs *kg*	A	B	C	D	E	G*	J	L	R	S	T	Housing Radial Load Rating (lbs)
203	1/2	.51	1.13	3.19	2.31	2.54	0.28	0.28	1.94	1.13	0.26	0.87	0.08	600
	5/8	.48												
	17mm	*.23*	*28.7*	*81.0*	*58.7*	*64.5*	*7.1*	*7.1*	*49.3*	*28.7*	*6.6*	*22.1*	*2.0*	*2668*
204	3/4	.51	1.22	3.56	2.63	2.81	0.31	0.34	2.19	1.31	0.30	0.92	0.08	700
	20mm	*.23*	*31.0*	*90.4*	*66.8*	*71.4*	*7.9*	*8.6*	*55.6*	*33.3*	*7.6*	*23.4*	*2.0*	*3112*
205	7/8	.79	1.22	3.75	2.80	3.00	0.34	0.34	2.38	1.50	0.30	0.92	0.08	800
	15/16	.76												
	1	.73												
	25mm	*.35*	*31.0*	*95.3*	*71.1*	*76.2*	*8.6*	*8.6*	*60.5*	*38.1*	*7.6*	*23.4*	*2.0*	*3557*
206	1-1/8	1.14	1.41	4.44	3.31	3.56	0.34	0.41	2.81	1.75	0.35	1.05	0.10	1100
	1-3/16	1.12												
	1-1/4	1.10												
	30mm	*.52*	*35.8*	*112.8*	*84.1*	*90.4*	*8.6*	*10.4*	*71.4*	*44.5*	*8.9*	*26.7*	*2.5*	*4891*
207	1-1/4	1.54	1.53	4.94	3.69	3.94	0.44	0.41	3.19	2.13	0.37	1.16	0.10	1100
	1-3/8	1.50												
	1-7/16	1.48												
	35mm	*.69*	*38.9*	*125.5*	*93.7*	*100.1*	*11.2*	*10.4*	*81.0*	*54.1*	*9.4*	*29.5*	*2.5*	*6225*

* Mounting bolt holes will accept either carriage or machine bolts.

FEATURES/BENEFITS PAGE B9-2	SELECTION PAGE B9-6	HOW TO ORDER/NOMENCLATURE PAGE B7-5	MODIFICATIONS/ACCESSORIES PAGE B9-36

SELECTION/DIMENSIONS

Eccentric SXV Collar Ball Bearings
SXV INTERMEDIATE DUTY 2-BOLT PILOTED FLANGE BEARINGS

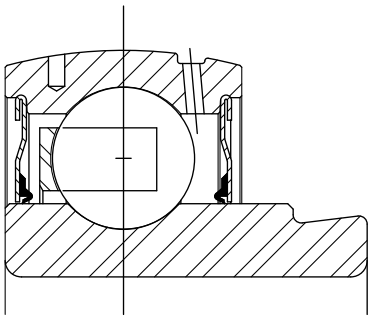

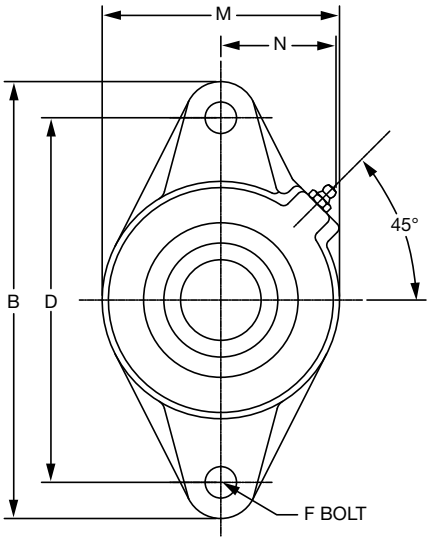

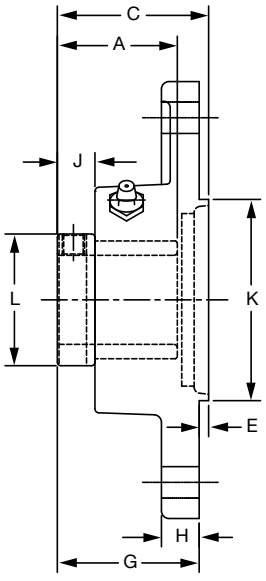

Series	Shaft Size	Part No.	Description
204	3/4	@	F2BZ-SXV-012
	20mm	***130781***	*F2BZ-SXV-20M*
205	7/8	@	F2BZ-SXV-014
	15/16	@	F2BZ-SXV-015
	1	@	F2BZ-SXV-100
	25mm	***130782***	*F2BZ-SXV-25M*
206	1-1/8	**067601**	F2BZ-SXV-102
	1-3/16	@	F2BZ-SXV-103
	1-1/4	@	F2BZ-SXV-104S
	30mm	***130783***	*F2BZ-SXV-30M*
207	1-1/4	**062893**	F2BZ-SXV-104
	1-3/8	@	F2BZ-SXV-106
	1-7/16	@	F2BZ-SXV-107
	35mm	***130784***	*F2BZ-SXV-35M*
208	1-1/2	**068763**	F2BZ-SXV-108
	40mm	***130785***	*F2BZ-SXV-40M*
209	1-11/16	@	F2BZ-SXV-111
	1-3/4	@	F2BZ-SXV-112
	45mm	***130786***	*F2BZ-SXV-45M*
210	1-15/16	@	F2BZ-SXV-115
	2	@	F2BZ-SXV-200
	50mm	***130787***	*F2BZ-SXV-50M*

@ Assembled to order



Eccentric SXV Collar Ball Bearings

SXV INTERMEDIATE DUTY 2-BOLT PILOTED FLANGE BEARINGS

Series	Shaft Size	Weight lbs *kg*	A	B	C	D	E	F Bolt Dia.	G	H	J	K	L	M	N
204	3/4	1.1	1.22	4.41	1.67	3.53	0.14	3/8	1.54	0.50	0.55	2.165/2.163	1.31	2.38	1.50
	20mm	*0.5*	*31.0*	*112.0*	*42.4*	*89.7*	*3.6*	*M10*	*39.1*	*12.7*	*14.0*	*54.99/54.94*	*33.3*	*60.5*	*38.1*
205	7/8	1.5	1.22	4.88	1.65	3.89	0.14	7/16	1.51	0.52	0.56	2.362/2.360	1.50	2.75	1.44
	15/16	1.4													
	1	1.4													
	25mm	*0.6*	*31.0*	*124.0*	*41.9*	*98.8*	*3.6*	*M10*	*38.4*	*13.2*	*14.2*	*59.99/59.94*	*38.1*	*69.9*	*36.6*
206	1-1/8	1.9	1.41	5.56	1.79	4.59	0.12	7/16	1.67	0.50	0.61	3.150/3.148	1.75	3.13	1.56
	1-3/16	1.9													
	1-1/4	1.9													
	30mm	*0.9*	*35.8*	*141.2*	*45.5*	*116.6*	*3.0*	*M10*	*42.4*	*12.7*	*15.5*	*80.01/79.96*	*44.5*	*79.5*	*39.6*
207	1-1/4	2.9	1.53	6.13	2.03	5.12	0.16	1/2	1.87	0.56	0.65	3.543/3.541	2.13	3.75	1.84
	1-3/8	2.8													
	1-7/16	2.8													
	35mm	*1.3*	*38.9*	*155.7*	*51.6*	*130.0*	*4.1*	*M12*	*47.5*	*14.2*	*16.5*	*89.99/89.94*	*54.1*	*95.3*	*46.7*
208	1-1/2	4.4	1.72	6.75	2.23	5.66	0.16	1/2	2.07	0.56	0.73	3.937/3.935	2.38	4.13	1.83
	40mm	*2*	*43.6*	*171.5*	*56.6*	*143.8*	*4.1*	*M12*	*52.6*	*14.2*	*18.5*	*100.00/99.95*	*60.5*	*104.9*	*46.5*
209	1-11/16	4.6	1.72	7.06	2.22	5.84	0.16	1/2	2.07	0.63	0.66	4.134/4.132	2.50	4.38	1.91
	1-3/4	4.5													
	45mm	*2.1*	*43.6*	*179.3*	*56.4*	*148.3*	*4.1*	*M14*	*52.6*	*16.0*	*16.8*	*105.00/104.95*	*63.5*	*111.3*	*48.5*
210	1-15/16	5	1.72	7.44	2.28	6.19	0.16	1/2	2.12	0.63	0.65	4.134/4.132	2.75	4.56	2.03
	2	4.8													
	50mm	*2.1*	*43.6*	*189.0*	*57.9*	*157.2*	*4.1*	*M16*	*53.8*	*16.0*	*16.5*	*105.00/104.95*	*69.9*	*115.8*	*51.6*

FEATURES/BENEFITS PAGE B9-2	SELECTION PAGE B9-6	HOW TO ORDER/NOMENCLATURE PAGE B7-5	MODIFICATIONS/ACCESSORIES PAGE B9-36

SELECTION/DIMENSIONS

Eccentric SXV Collar Ball Bearings
SXV LF INTERMEDIATE DUTY 3-BOLT FLANGE BEARINGS

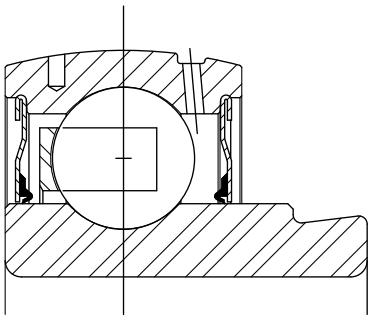

Lube fitting thread size:
203-204 series - 1/4-28 tapered thread
205-207 series - 1/8-27 NPT

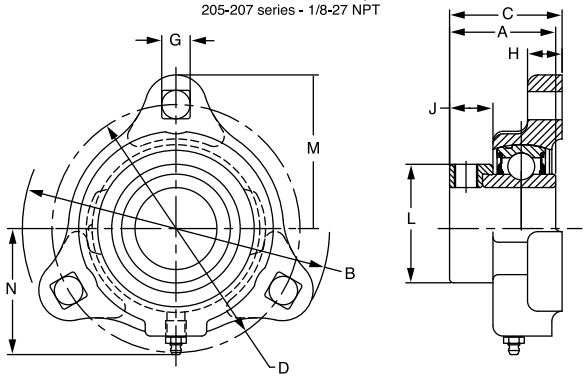

Series	Shaft Size	Standard		No Lube/Sealed for Life (-NL)	
		Part No.	Description	Part No.	Description
203	1/2	@	LF-SXV-008	@	LF-SXV-008-NL
	5/8	@	LF-SXV-010	@	LF-SXV-010-NL
	17mm	*@*	*LF-SXV-17M*	*@*	*LF-SXV-17M-NL*
204	3/4	@	LF-SXV-012	@	LF-SXV-012-NL
	20mm	*@*	*LF-SXV-20M*	*@*	*LF-SXV-20M-NL*
205	7/8	@	LF-SXV-014	@	LF-SXV-014-NL
	15/16	@	LF-SXV-015	@	LF-SXV-015-NL
	1	**124591**	LF-SXV-100	@	LF-SXV-100-NL
	25mm	*@*	*LF-SXV-25M*	*@*	*LF-SXV-25M-NL*
206	1-1/16	@	LF-SXV-101	@	LF-SXV-101-NL
	1-1/8	@	LF-SXV-102	**068790**	LF-SXV-102-NL
	1-3/16	**124590**	LF-SXV-103	**062454**	LF-SXV-103-NL
	1-1/4	@	LF-SXV-104S	**124634**	LF-SXV-104S-NL
	30mm	***065530***	*LF-SXV-30M*	*@*	*LF-SXV-30M-NL*
207	1-1/4	@	LF-SXV-104	@	LF-SXV-104-NL
	1-5/16	@	LF-SXV-105	@	LF-SXV-105-NL
	1-3/8	**053763**	LF-SXV-106	@	LF-SXV-106-NL
	1-7/16	**050420**	LF-SXV-107	@	LF-SXV-107-NL
	35mm	*@*	*LF-SXV-35M*	*@*	*LF-SXV-35M-NL*

@ Assembled to order

Series	Shaft Size	Weight lbs *kg*	A	B	C	D	G	H	J	L	M	N
203	1/2	0.63	1.13	3.19	1.28	2.50	0.28	0.38	0.56	1.13	1.59	1.84
	5/8	0.60										
	17mm	*0.30*	*28.7*	*81.0*	*32.5*	*63.5*	*7.1*	*9.7*	*14.2*	*28.7*	*40.4*	*46.7*
204	3/4	0.77	1.22	3.56	1.41	2.81	0.34	0.42	0.56	1.31	1.78	1.56
	20mm	*0.40*	*31.0*	*90.4*	*35.8*	*71.4*	*8.6*	*10.7*	*14.2*	*33.3*	*45.2*	*39.6*
205	7/8	0.92	1.22	3.75	1.40	3.00	0.34	0.42	0.53	1.31	1.88	1.70
	15/16	0.89										
	1	0.86										
	25mm	*0.40*	*31.0*	*95.3*	*35.6*	*76.2*	*8.6*	*10.7*	*13.5*	*33.3*	*47.8*	*43.2*
206	1-1/16	1.53	1.41	4.44	1.60	3.56	0.41	0.47	0.61	1.75	2.22	2.02
	1-1/8	1.50										
	1-3/16	1.47										
	1-1/4	1.44										
	30mm	*0.70*	*35.8*	*112.8*	*40.6*	*90.4*	*10.4*	*11.9*	*15.5*	*44.5*	*56.4*	*51.3*
207	1-1/4	1.92	1.53	4.81	1.72	3.94	0.41	0.50	0.65	2.13	2.41	2.14
	1-5/16	1.89										
	1-3/8	1.86										
	1-7/16	1.83										
	35mm	*0.80*	*38.9*	*122.2*	*43.7*	*100.1*	*10.4*	*12.7*	*16.5*	*54.1*	*61.2*	*54.4*

FEATURES/BENEFITS PAGE B9-2 | SELECTION PAGE B9-6 | HOW TO ORDER/NOMENCLATURE PAGE B7-5 | MODIFICATIONS/ACCESSORIES PAGE B9-36

DODGE®



Eccentric SXV Collar Ball Bearings
SLX LIGHT DUTY 3-BOLT FLANGE BEARINGS

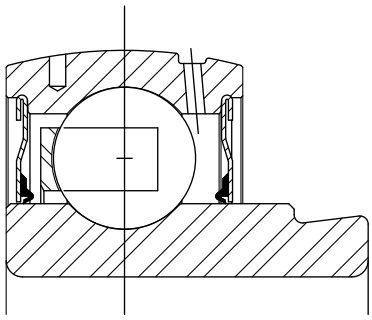

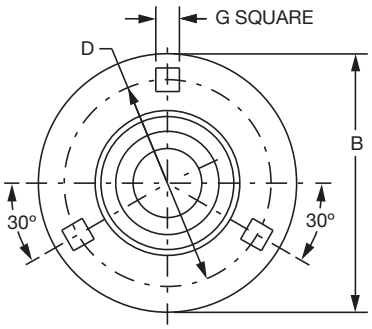

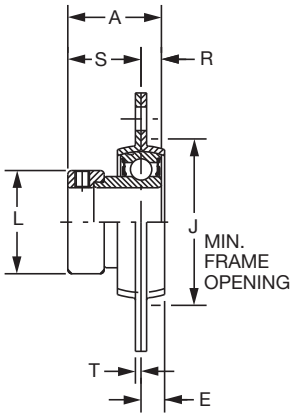

Series	Shaft Size	Standard	
		Part No	Description
204	3/4	**128144**	F3B-SLX-012
	20mm	**@**	*F3B-SLX-20M*
205	7/8	**128145**	F3B-SLX-014
	15/16	**128146**	F3B-SLX-015
	1	**128147**	F3B-SLX-100
	25mm	**@**	*F3B-SLX-25M*
206	1-1/8	**128148**	F3B-SLX-102
	1-3/16	**128149**	F3B-SLX-103
	1-1/4	**128150**	F3B-SLX-104S
	30mm	**@**	*F3B-SLX-30M*
207	1-1/4	**128189**	F3B-SLX-104
	1-3/8	**128190**	F3B-SLX-106
	1-7/16	**128191**	F3B-SLX-107
	35mm	**@**	*F3B-SLX-35M*

@ Assembled to order

Series	Shaft Size	Weight lbs *kg*	A	B	D	E	G*	J	L	R	S	T	Housing Radial Load Rating (lbs)
204	3/4	.53	1.22	3.56	2.81	0.31	0.34	2.19	1.31	0.30	0.92	0.08	700
	20mm	*0.24*	*31.0*	*90.4*	*71.4*	*7.9*	*8.6*	*55.6*	*33.3*	*7.6*	*23.4*	*2.0*	*3112*
205	7/8	0.81	1.22	3.75	3.00	0.34	0.34	2.38	1.50	0.30	0.92	0.08	800
	15/16	0.78											
	1	0.75											
	25mm	*0.36*	*31.0*	*95.3*	*76.2*	*8.6*	*8.6*	*60.5*	*38.1*	*7.6*	*23.4*	*2.0*	*3557*
206	1-1/18	1.16	1.41	4.44	3.56	0.34	0.41	2.81	1.75	0.35	1.05	0.10	1100
	1-3/16	1.14											
	1-1/4	1.12											
	30mm	*0.53*	*35.8*	*112.8*	*90.4*	*8.6*	*10.4*	*71.4*	*44.5*	*8.9*	*26.7*	*2.5*	*4891*
207	1-1/4	1.56	1.53	4.81	3.94	0.38	0.41	3.19	2.13	0.37	1.16	0.10	1100
	1-3/8	1.52											
	1-7/16	1.5											
	35mm	*0.7*	*38.9*	*122.2*	*100.1*	*9.7*	*10.4*	*81.0*	*54.1*	*9.4*	*29.5*	*2.5*	*6225*

FEATURES/BENEFITS PAGE B9-2	SELECTION PAGE B9-6	HOW TO ORDER/NOMENCLATURE PAGE B7-5	MODIFICATIONS/ACCESSORIES PAGE B9-36

SELECTION/DIMENSIONS

Eccentric SXV Collar Ball Bearings
SXV INTERMEDIATE DUTY 4-BOLT FLANGE BEARINGS

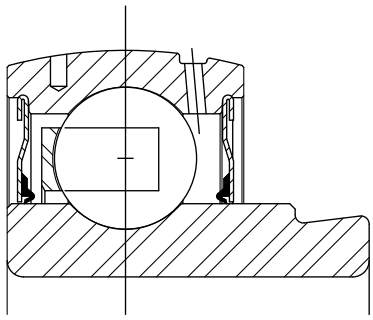

Lube fitting thread size:
203 series - 1/4-28 tapered thread
204 series and larger - 1/8-27 NPT

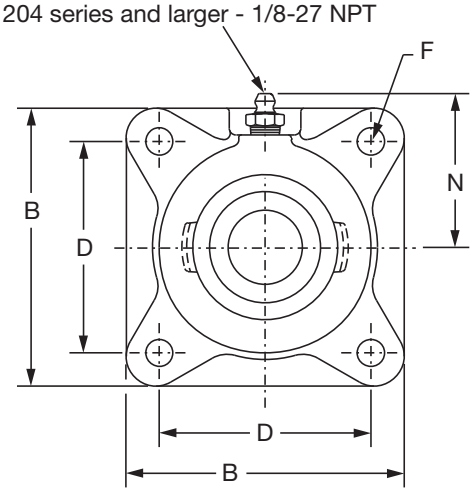

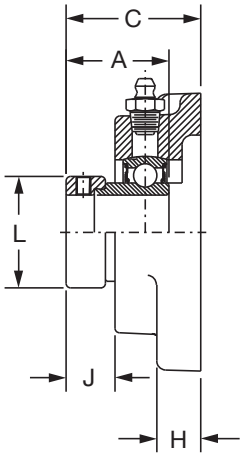

Series	Shaft Size	Standard	
		Part No.	Description
203	1/2	**130332**	F4B-SXV-008
	5/8	**130333**	F4B-SXV-010
	17mm	***125720***	*F4B-SXV-17M*
204	3/4	**131377**	F4B-SXV-012
	20mm	***125721***	*F4B-SXV-20M*
205	7/8	**131378**	F4B-SXV-014
	15/16	**131379**	F4B-SXV-015
	1	**131380**	F4B-SXV-100
	25mm	***125722***	*F4B-SXV-25M*
206	1-1/16	**131381**	F4B-SXV-101
	1-1/8	**131382**	F4B-SXV-102
	1-3/16	**131383**	F4B-SXV-103
	1-1/4	**131384**	F4B-SXV-104S
	30mm	***125723***	*F4B-SXV-30M*
207	1-1/4	**131385**	F4B-SXV-104
	1-5/16	**131386**	F4B-SXV-105
	1-3/8	**131387**	F4B-SXV-106
	1-7/16	**131388**	F4B-SXV-107
	35mm	***125724***	*F4B-SXV-35M*
208	1-1/2	**131389**	F4B-SXV-108
	40mm	***125725***	*F4B-SXV-40M*
209	1-11/16	**130334**	F4B-SXV-111
	1-3/4	**130335**	F4B-SXV-112
	45mm	***125726***	*F4B-SXV-45M*
210	1-15/16	**130336**	F4B-SXV-115
	2	**130337**	F4B-SXV-200
	50mm	***125727***	*F4B-SXV-50M*
211	2	**130338**	F4B-SXV-200L
	2-3/16	**130339**	F4B-SXV-203
	55mm	***125728***	*F4B-SXV-55M*



Eccentric SXV Collar Ball Bearings

SXV INTERMEDIATE DUTY 4-BOLT FLANGE BEARINGS

Series	Shaft Size	Weight lbs *kg*	A	B	C	D	F Bolt Dia.	H	J	L	N
203	1/2	1.1	1.13	3.00	1.40	2.13	3/8	0.44	0.55	1.13	1.69
	5/8	1.0									
	17mm	*0.5*	*28.7*	*76.2*	*35.6*	*54.0*	*M10*	*11.2*	*14.0*	*28.7*	*42.9*
204	3/4	1.7	1.22	3.38	1.54	2.50	3/8	0.44	0.55	1.31	1.94
	20mm	*0.7*	*31.0*	*85.9*	*39.1*	*63.5*	*M10*	*11.2*	*14.0*	*33.3*	*49.3*
205	7/8	2.3	1.22	3.75	1.51	2.75	7/16	0.50	0.56	1.50	2.06
	15/16	2.2									
	1	2.0									
	25mm	*0.9*	*31.0*	*95.3*	*38.4*	*69.9*	*M10*	*12.7*	*14.2*	*38.1*	*52.3*
206	1-1/16	3.4	1.41	4.25	1.67	3.25	7/16	0.50	0.61	1.75	2.19
	1-1/8	3.3									
	1-3/16	3.2									
	1-1/4	3.0									
	30mm	*1.4*	*35.8*	*108.0*	*42.4*	*82.6*	*M10*	*12.7*	*15.5*	*44.5*	*55.6*
207	1-1/4	4.6	1.53	4.75	1.87	3.63	1/2	0.56	0.65	2.13	2.44
	1-5/16	4.5									
	1-3/8	4.3									
	1-7/16	4.2									
	35mm	*1.9*	*38.9*	*120.7*	*47.5*	*92.1*	*M12*	*14.2*	*16.5*	*54.1*	*62.0*
208	1-1/2	5.0	1.72	5.13	2.07	4.00	1/2	0.56	0.73	2.38	2.38
	40mm	*2.2*	*43.6*	*130.3*	*52.6*	*101.6*	*M12*	*14.2*	*18.5*	*60.5*	*60.5*
209	1-11/16	6.2	1.69	5.38	2.07	4.13	1/2	0.63	0.66	2.50	2.75
	1-3/4	6.0									
	45mm	*2.7*	*42.9*	*136.7*	*52.6*	*104.8*	*M12*	*16.0*	*16.8*	*63.5*	*69.9*
210	1-15/16	7.0	1.72	5.63	2.12	4.38	5/8	0.63	0.65	2.75	2.88
	2	6.8									
	50mm	*3.0*	*43.6*	*143.0*	*53.8*	*111.1*	*M16*	*16.0*	*16.5*	*69.9*	*73.2*
211	2	10	1.90	6.50	2.36	5.13	5/8	0.69	0.77	3.00	3.25
	2-3/16	9.7									
	55mm	*4.3*	*48.3*	*165.1*	*59.9*	*130.2*	*M16*	*17.5*	*19.6*	*76.2*	*82.6*

FEATURES/BENEFITS PAGE B9-2	SELECTION PAGE B9-6	HOW TO ORDER/NOMENCLATURE PAGE B7-5	MODIFICATIONS/ACCESSORIES PAGE B9-36

SELECTION/DIMENSIONS

Eccentric Collar Ball Bearings
SLX LIGHT DUTY 4-BOLT FLANGE BEARINGS

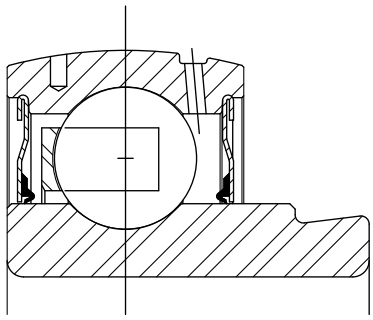

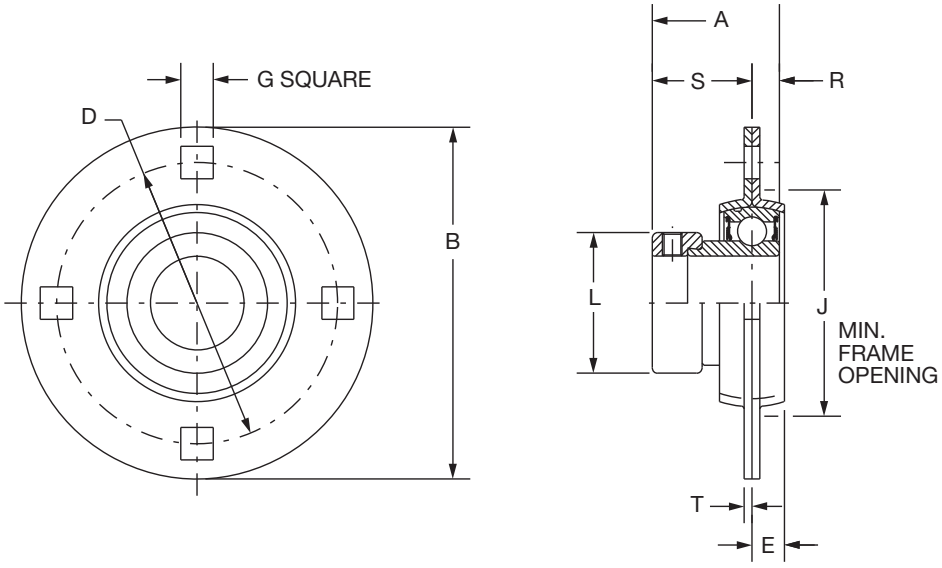

Series	Shaft Size	Standard	
		Part No.	Description
208	1-1/2	**128192**	F4B-SLX-108
	40mm	**@**	*F4B-SLX-40M*
210	1-15/16	**128193**	F4B-SLX-115
	2	**128194**	F4B-SLX-200
	50mm	**@**	*F4B-SLX-50M*
211	2	**128195**	F4B-SLX-200L
	2-3/16	**128196**	F4B-SLX-203
	55mm	**@**	*F4B-SLX-55M*

@ Assembled to order

DODGE®



Eccentric Collar Ball Bearings
SLX LIGHT DUTY 4-BOLT FLANGE BEARINGS

Series	Shaft Size	Weight lbs *kg*	A	B	D	E	G*	J	L	R	S	T	Housing Radial Load Rating (lbs)
208	1-1/2	3.00	1.72	5.81	4.69	0.41	0.53	3.56	2.38	0.43	1.28	0.13	1,700
	40mm	*1.38*	*43.6*	*147.6*	*119.1*	*10.4*	*13.5*	*90.4*	*60.5*	*11.0*	*32.6*	*3.3*	*7,556*
210	1-15/16	3.55	1.72	6.13	5.00	0.44	0.53	4.00	2.50	0.43	1.29	0.15	1,900
	2	3.40											
	50mm	*1.63*	*43.6*	*155.7*	*127.0*	*11.2*	*13.5*	*101.6*	*63.5*	*11.0*	*32.7*	*3.8*	*8,444*
211	2	4.64	1.90	6.56	5.44	0.47	0.53	4.44	2.75	0.47	1.43	0.15	2,300
	2-3/16	4.35											
	55mm	*2.14*	*48.3*	*166.6*	*138.2*	*11.9*	*13.5*	*112.8*	*69.9*	*12.0*	*36.4*	*3.8*	*10,222*

*Mounting bolt holes will accept carriage or machine bolts.

SELECTION/DIMENSIONS

Eccentric SXV Collar Ball Bearings
SXV INTERMEDIATE DUTY PILOTED FLANGE BEARINGS

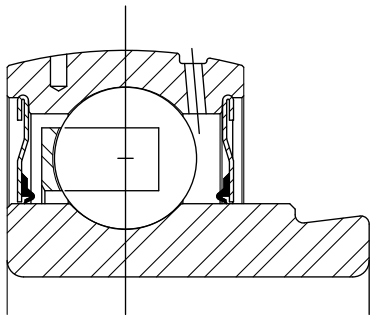

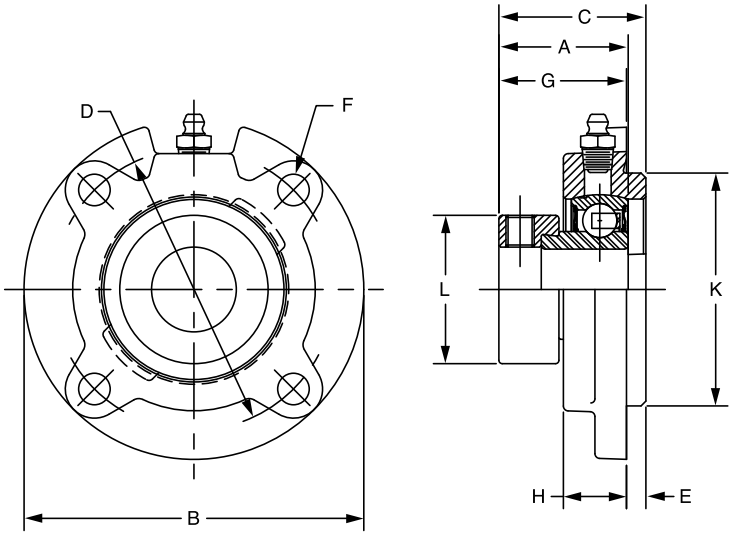

Series	Shaft Size	Standard	
		Part No.	Description
206	1-1/16	@	FC-SXV-101
	1-1/8	@	FC-SXV-102
	1-3/16	@	FC-SXV-103
	1-1/4	@	FC-SXV-104S
	30mm	***130788***	*FC-SXV-30M*
207	1-1/4	@	FC-SXV-104
	1-5/16	@	FC-SXV-105
	1-3/8	@	FC-SXV-106
	1-7/16	**062337**	FC-SXV-107
	35mm	***130789***	*FC-SXV-35M*
208	1-1/2	@	FC-SXV-108
	40mm	***130790***	*FC-SXV-40M*
209	1-11/16	**062339**	FC-SXV-111
	1-3/4	@	FC-SXV-112
	45mm	***130791***	*FC-SXV-45M*
210	1-15/16	@	FC-SXV-115
	2	@	FC-SXV-200
	50mm	***130792***	*FC-SXV-50M*
211	2	@	FC-SXV-200L
	2-3/16	@	FC-SXV-203
	55mm	@	*FC-SXV-55M*

@ Assembled to order



Eccentric SXV Collar Ball Bearings
SXV INTERMEDIATE DUTY PILOTED FLANGE BEARINGS

Series	Shaft Size	Weight lbs *kg*	A	B	C	D	E	F Bolt Dia.	G	H	K	L
	1-1/16	3.2	1.41	4.38	1.64	3.63	0.25	3/8	1.39	0.81	3.000/2.998	1.75
	1-1/8	3.1										
206	1-3/16	3.0										
	1-1/4	2.9										
	30mm	*1.3*	*35.8*	*111.3*	*41.7*	*92.2*	*6.4*	*M10*	*35.3*	*20.6*	*76.20/76.15*	*44.5*
	1-1/4	4.2	1.53	5.00	1.89	4.13	0.38	3/8	1.52	0.84	3.375/3.373	2.13
	1-5/16	4.1										
207	1-3/8	4.0										
	1-7/16	3.9										
	35mm	*1.8*	*38.9*	*127.0*	*48.0*	*104.9*	*9.7*	*M10*	*38.6*	*21.3*	*85.73/85.67*	*54.1*
208	1-1/2	4.6	1.72	5.25	2.07	4.38	0.44	7/16	1.63	0.89	3.625/3.623	2.38
	40mm	*2.0*	*43.6*	*133.4*	*52.6*	*111.3*	*11.2*	*M12*	*41.4*	*22.6*	*92.08/92.02*	*60.5*
	1-11/16	5.5	1.69	5.75	2.03	4.75	0.44	1/2	1.59	0.91	4.000/3.998	2.50
209	1-3/4	5.4										
	45mm	*2.4*	*42.9*	*146.1*	*51.6*	*120.7*	*11.2*	*M12*	*40.4*	*23.1*	*101.60/101.55*	*63.5*
	1-15/16	6.4	1.72	6.13	2.07	5.13	0.47	1/2	1.60	0.92	4.250/4.248	2.75
210	2	6.3										
	50mm	*2.9*	*43.6*	*155.7*	*52.6*	*130.3*	*11.9*	*M12*	*40.6*	*23.4*	*107.95/107.90*	*69.9*
	2	7.3	1.90	6.38	2.43	5.38	0.63	1/2	1.80	1.00	4.500/4.498	3.00
211	2-3/16	7.2										
	55mm	*3.3*	*48.3*	*162.1*	*61.7*	*136.7*	*16.0*	*M12*	*45.7*	*25.4*	*114.30/114.25*	*76.2*

FEATURES/BENEFITS PAGE B9-2	SELECTION PAGE B9-6	HOW TO ORDER/NOMENCLATURE PAGE B7-5	MODIFICATIONS/ACCESSORIES PAGE B9-36

SELECTION/DIMENSIONS

Eccentric SXV Collar Ball Bearings
SXV INTERMEDIATE DUTY NARROW SLOT TAKE-UP BEARINGS

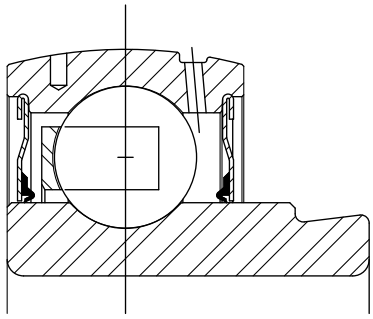

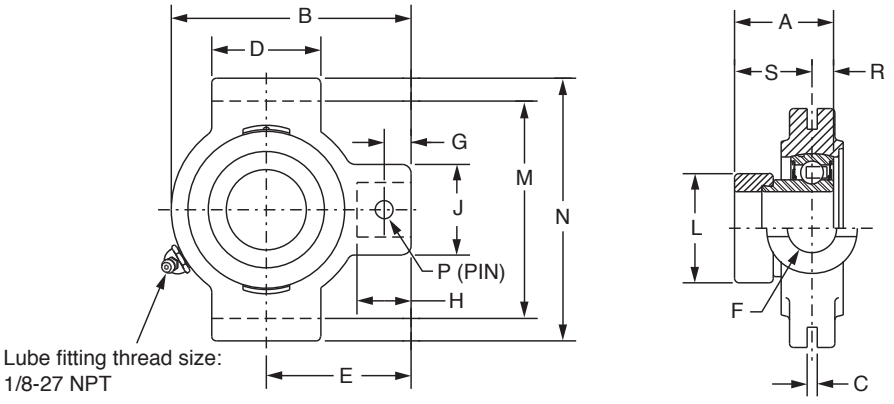

Series	Shaft Size	Standard	
		Part No.	Description
204	3/4	**131186**	NSTU-SXV-012
205	7/8	**131187**	NSTU-SXV-014
	15/16	**131188**	NSTU-SXV-015
	1	**131189**	NSTU-SXV-100
206	1-1/16	**131190**	NSTU-SXV-101
	1-1/8	**131191**	NSTU-SXV-102
	1-3/16	**131192**	NSTU-SXV-103
	1-1/4	**131193**	NSTU-SXV-104S
207	1-1/4	**131194**	NSTU-SXV-104
	1-5/16	**131195**	NSTU-SXV-105
	1-3/8	**131196**	NSTU-SXV-106
	1-7/16	**131197**	NSTU-SXV-107
208	1-1/2	**131198**	NSTU-SXV-108
209	1-11/16	**130340**	NSTU-SXV-111
	1-3/4	**130341**	NSTU-SXV-112
210	1-15/16	**130342**	NSTU-SXV-115
	2	**130343**	NSTU-SXV-200
211	2	**130344**	NSTU-SXV-200L
	2-3/16	**130345**	NSTU-SXV-203



Eccentric SXV Collar Ball Bearings

SXV INTERMEDIATE DUTY NARROW SLOT TAKE-UP BEARINGS

Series	Shaft Size	Weight lbs	Take-Up Frame Size	A	B	C	D	E	F Screw Dia.	G	H	J	L	M	N	P Pin Dia.	R	S
204	3/4	1.3	NS210	1.22	3.50	0.250	1.50	2.19	3/4	0.44	0.88	1.38	1.31	2.635/2.605	3.13	0.32	0.30	0.92
205	7/8 15/16 1	1.7 1.6 1.5	NS210	1.22	3.56	0.250	1.50	2.19	3/4	0.44	0.88	1.38	1.50	2.635/2.605	3.13	0.32	0.30	0.92
206	1-1/16 1-1/8 1-3/16 1-1/4	2.9 2.8 2.6 2.5	NS308	1.41	4.31	0.250	2.50	2.69	3/4	0.50	0.94	1.38	1.75	3.510/3.480	4.13	0.32	0.35	1.05
207	1-1/4 1-5/16 1-3/8 1-7/16	2.8 2.7 2.6 2.5	NS308	1.53	4.50	0.250	2.50	2.69	3/4	0.50	0.94	1.38	2.13	3.510/3.480	4.13	0.32	0.37	1.16
208	1-1/2	4.7	NS400	1.72	5.38	0.313	3.00	3.25	7/8	0.66	1.16	1.63	2.38	4.015/3.985	4.75	0.38	0.43	1.28
209	1-11/16 1-3/4	4.8 4.7	NS400	1.69	5.44	0.313	3.00	3.25	7/8	0.72	1.22	1.63	2.50	4.015/3.985	4.75	0.38	0.43	1.26
210	1-15/16 2	4.9 4.8	NS400	1.72	5.50	0.313	3.00	3.25	7/8	0.59	1.09	1.63	2.75	4.015/3.985	4.75	0.38	0.43	1.29
211	2 2-3/16	6.8 6.8	NS407	1.90	6.13	0.313	3.50	3.63	1	0.69	1.28	1.75	3.00	4.448/4.418	5.38	0.44	0.47	1.43

FEATURES/BENEFITS PAGE B9-2	SELECTION PAGE B9-6	HOW TO ORDER/NOMENCLATURE PAGE B7-5	MODIFICATIONS/ACCESSORIES PAGE B9-36

SELECTION/DIMENSIONS

Eccentric SXV Collar Ball Bearings
SXV INTERMEDIATE DUTY WIDE SLOT TAKE-UP BEARINGS

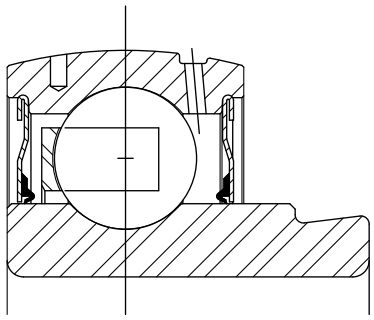

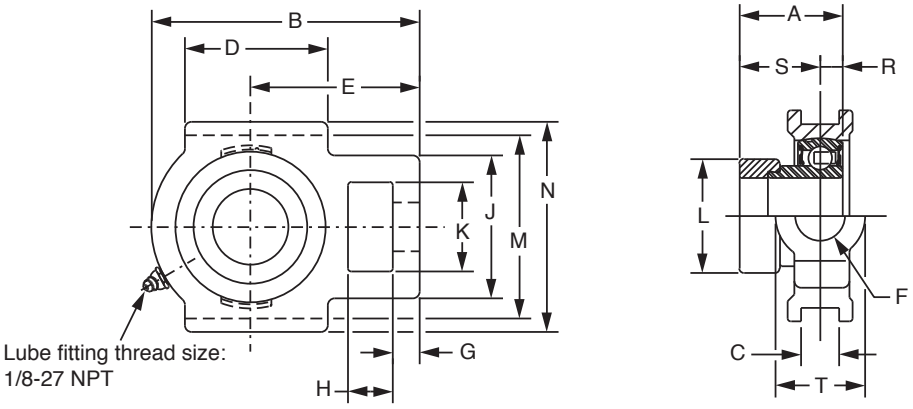

Series	Shaft Size	Standard	
		Part No.	Description
204	3/4	**131238**	WSTU-SXV-012
	20mm	***130793***	*WSTU-SXV-20M*
205	7/8	**131239**	WSTU-SXV-014
	15/16	**131240**	WSTU-SXV-015
	1	**131241**	WSTU-SXV-100
	25mm	**130794**	*WSTU-SXV-25M*
206	1-1/8	**131243**	WSTU-SXV-102
	1-3/16	**131244**	WSTU-SXV-103
	1-1/4	**131245**	WSTU-SXV-104S
	30mm	***130795***	*WSTU-SXV-30M*
207	1-1/4	**131246**	WSTU-SXV-104
	1-3/8	**131248**	WSTU-SXV-106
	1-7/16	**131249**	WSTU-SXV-107
	35mm	***130796***	*WSTU-SXV-35M*
208	1-1/2	**131250**	WSTU-SXV-108
	40mm	***130797***	*WSTU-SXV-40M*
209	1-11/16	**130346**	WSTU-SXV-111
	1-3/4	**130347**	WSTU-SXV-112
	45mm	***130798***	*WSTU-SXV-45M*
210	1-15/16	**130348**	WSTU-SXV-115
	2	**130349**	WSTU-SXV-200
	50mm	***130799***	*WSTU-SXV-50M*
211	2	**130350**	WSTU-SXV-200L
	2-3/16	**130351**	WSTU-SXV-203
	55mm	**@**	*WSTU-SXV-55M*

@ Assemble to order



Eccentric SXV Collar Ball Bearings

SXV INTERMEDIATE DUTY WIDE SLOT TAKE-UP BEARINGS

Series	Shaft Size	Weight lbs kg	Take-Up Frame Size	A	B	C*	D	E	F Screw Dia.	G	H	J	K	L	M	N	R	S	T
204	3/4	1.2	WS300	1.22	3.69	0.531	2.00	2.38	5/8	0.38	0.63	2.00	1.25	1.31	2.985/3.015	3.63	0.30	0.92	1.38
	20mm	*0.5*		*31.0*	*93.7*	*13.49*	*50.8*	*60.5*	*15.9*	*9.7*	*16.0*	*50.8*	*31.8*	*33.3*	*75.82/76.58*	*92.2*	*7.6*	*23.4*	*35.1*
205	7/8	1.7	WS300	1.22	3.81	0.531	2.00	2.44	5/8	0.38	0.63	2.00	1.31	1.50	2.985/3.015	3.63	0.30	0.92	1.38
	15/16	1.6																	
	1	1.5																	
	25mm	*0.7*		*31.0*	*96.8*	*13.49*	*50.8*	*62.0*	*15.9*	*9.7*	*16.0*	*50.8*	*33.3*	*38.1*	*75.82/76.58*	*92.2*	*7.6*	*23.4*	*35.1*
206	1-1/8	2.8	WS308	1.41	4.38	0.531	2.25	2.75	3/4	0.38	0.63	2.19	1.44	1.75	3.480/3.510	4.13	0.35	1.05	1.63
	1-3/16	2.6																	
	1-1/4	2.5																	
	30mm	*1.2*		*35.8*	*111.3*	*13.49*	*57.2*	*69.9*	*19.1*	*9.7*	*16.0*	*55.6*	*36.6*	*44.5*	*88.39/89.15*	*104.9*	*8.9*	*26.7*	*41.3*
207	1-1/4	2.8	WS308	1.53	4.87	0.531	2.50	3.06	3/4	0.50	0.63	2.50	1.44	2.13	3.480/3.510	4.13	0.37	1.16	1.63
	1-3/8	2.6																	
	1-7/16	2.5																	
	35mm	*1.2*		*38.9*	*123.7*	*13.49*	*63.5*	*77.7*	*19.1*	*12.7*	*16.0*	*63.5*	*36.6*	*54.1*	*88.39/89.15*	*104.9*	*9.4*	*29.5*	*41.3*
208	1-1/2	4.7	WS400	1.72	5.69	0.688	3.25	3.50	1	0.63	0.75	3.25	1.94	2.38	3.985/4.015	4.50	0.43	1.28	1.94
	40mm	*2.2*		*43.6*	*144.5*	*17.48*	*82.6*	*88.9*	*25.4*	*16.0*	*19.1*	*82.6*	*49.3*	*60.5*	*101.22/101.98*	*114.3*	*11.0*	*32.6*	*49.3*
209	1-11/16	4.8	WS400	1.69	5.63	0.688	3.25	3.44	1	0.63	0.75	3.25	1.94	2.50	3.985/4.015	4.75	0.43	1.26	1.94
	1-3/4	4.7																	
	45mm	*2.2*		*42.9*	*143.0*	*17.48*	*82.6*	*87.4*	*25.4*	*16.0*	*19.1*	*82.6*	*49.3*	*63.5*	*101.22/101.98*	*120.7*	*10.9*	*32.0*	*49.3*
210	1-15/16	4.9	WS400	1.72	5.82	0.688	3.38	3.56	1	0.63	0.75	3.25	1.94	2.50	3.985/4.015	4.75	0.43	1.29	1.94
	2	4.8																	
	50mm	*2.2*		*43.6*	*147.8*	*17.48*	*85.9*	*90.4*	*25.4*	*16.0*	*19.1*	*82.6*	*49.3*	*63.5*	*101.22/101.98*	*120.7*	*11.0*	*32.7*	*49.3*
211	2	6.8	WS502	1.90	6.69	1.063	3.75	4.19	1-1/4	0.75	1.00	4.00	2.50	2.75	5.110/5.140	5.88	0.47	1.43	2.50
	2-3/16	6.6																	
	55mm	*3.1*		*48.3*	*169.9*	*27.00*	*95.3*	*106.4*	*31.8*	*19.1*	*25.4*	*101.6*	*63.5*	*69.9*	*129.79/130.56*	*149.4*	*12.0*	*36.4*	*63.5*

FEATURES/BENEFITS PAGE B9-2	SELECTION PAGE B9-6	HOW TO ORDER/NOMENCLATURE PAGE B7-5	MODIFICATIONS/ACCESSORIES PAGE B9-36

SELECTION/DIMENSIONS

Eccentric SXV Collar Ball Bearings
SXV INTERMEDIATE BEARING INSERTS

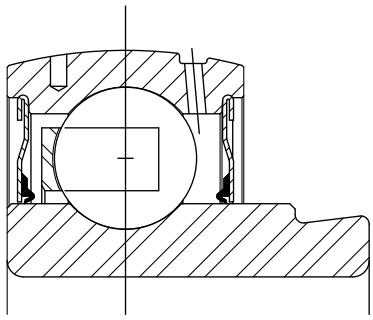

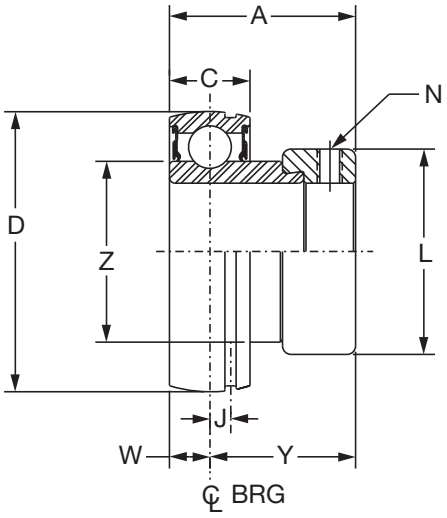

Series	Shaft Size	Part No.	Description
203	1/2	**130300**	INS-SXV-008
	5/8	**130301**	INS-SXV-010
	17mm	***125644***	*INS-SXV-17M*
204	3/4	**131435**	INS-SXV-012
	20mm	***125645***	*INS-SXV-20M*
205	7/8	**131436**	INS-SXV-014
	15/16	**131437**	INS-SXV-015
	1	**131438**	INS-SXV-100
	25mm	***125646***	*INS-SXV-25M*
206	1-1/16	**131439**	INS-SXV-101
	1-1/8	**131440**	INS-SXV-102
	1-3/16	**131441**	INS-SXV-103
	1-1/4	**131442**	INS-SXV-104S
	30mm	***125647***	*INS-SXV-30M*
207	1-1/4	**131443**	INS-SXV-104
	1-5/16	**131444**	INS-SXV-105
	1-3/8	**131445**	INS-SXV-106
	1-7/16	**131446**	INS-SXV-107
	35mm	***125648***	*INS-SXV-35M*
208	1-1/2	**131447**	INS-SXV-108
	40mm	***125649***	*INS-SXV-40M*
209	1-11/16	**130302**	INS-SXV-111
	1-3/4	**130303**	INS-SXV-112
	45mm	***125650***	*INS-SXV-45M*
210	1-15/16	**130305**	INS-SXV-115
	2	**130306**	INS-SXV-200
	50mm	***125651***	*INS-SXV-50M*
211	2	**130307**	INS-SXV-200L
	2-3/16	**130308**	INS-SXV-203
	55mm	***125652***	*INS-SXV-55M*



Eccentric SXV Collar Ball Bearings
SXV INTERMEDIATE BEARING INSERTS

Series	Shaft Size	Weight lbs *kg*	A	C	D	J	L	N	W	Y	Z
203	1/2	0.3	1.13	0.51	1.5748	0.15	1.13	10-32	0.26	0.87	0.96
	5/8	0.3									
	17mm	*0.1*	*28.7*	*13.0*	*40.000*	*3.8*	*28.7*	*M6x1*	*6.6*	*22.1*	*24.4*
204	3/4	0.3	1.22	0.58	1.8504	0.15	1.31	1/4-28	0.30	0.92	1.12
	20mm	*0.1*	*31.0*	*14.7*	*47.000*	*3.8*	*33.3*	*M6x1*	*7.6*	*23.4*	*28.4*
205	7/8	0.5	1.22	0.59	2.0472	0.16	1.50	1/4-28	0.30	0.92	1.32
	15/16	0.4									
	1	0.4									
	25mm	*0.2*	*31.0*	*15.0*	*52.000*	*4.1*	*38.1*	*M6x1*	*7.6*	*23.4*	*33.5*
206	1-1/16	0.7	1.41	0.69	2.4409	0.16	1.75	5/16-24	0.35	1.05	1.57
	1-1/8	0.7									
	1-3/16	0.7									
	1-1/4	0.7									
	25mm	*0.3*	*35.8*	*17.5*	*62.000*	*4.1*	*44.5*	*M8x1.25*	*8.9*	*26.7*	*39.9*
207	1-1/4	1.2	1.53	0.75	2.8346	0.20	2.13	5/16-24	0.37	1.16	1.84
	1-5/16	1.2									
	1-3/8	1.1									
	1-7/16	1.1									
	35mm	*0.5*	*38.9*	*19.1*	*72.000*	*5.1*	*54.1*	*M8x1.25*	*9.4*	*29.5*	*46.7*
208	1-1/2	1.8	1.72	0.87	3.1496	0.22	2.38	5/16-24	0.43	1.28	2.05
	40mm	*0.8*	*43.7*	*22.1*	*80.000*	*5.6*	*60.5*	*M10x1.5*	*10.9*	*32.5*	*52.1*
209	1-11/16	1.9	1.69	0.87	3.3465	0.25	2.50	5/16-24	0.43	1.26	2.22
	1-3/4	1.8									
	45mm	*0.8*	*42.9*	*22.1*	*85.000*	*6.4*	*63.5*	*M8x1.25*	*10.9*	*32.0*	*56.4*
210	1-15/16	2.0	1.72	0.87	3.5433	0.25	2.50	3/8-24	0.43	1.29	2.43
	2	1.9									
	50mm	*0.9*	*43.6*	*22.1*	*90.000*	*6.4*	*63.5*	*M10x1.5*	*10.9*	*32.7*	*61.7*
211	2	2.7	1.90	0.94	3.9370	0.25	2.75	3/8-24	0.47	1.43	2.71
	2-3/16	2.5									
	55mm	*1.2*	*48.3*	*23.9*	*100.000*	*6.4*	*69.9*	*M12x1.75*	*12.0*	*36.4*	*68.8*

FEATURES/BENEFITS PAGE B9-2	SELECTION PAGE B9-6	HOW TO ORDER/NOMENCLATURE PAGE B7-5	MODIFICATIONS/ACCESSORIES PAGE B9-36



Eccentric SXV Collar Ball Bearings

LUBRICANTS

DODGE ball bearings are factory lubricated with a lithium complex base lubricant. For applications where extreme ambient temperatures or speeds are anticipated or environmental considerations require a different lubricant, DODGE has a variety of lubricants available. Special lubricant options usually require set-up charges and premiums.

SEALS

The PROGUARD PLUS seal is a highly effective positive contact, land riding seal designed to meet the requirements for the majority of applications. For extreme contamination or high pressure wash down, flingers can be added to provide additional protection. For high speeds or where seal drag would be an impediment, a labyrinth seal is available.

AIR HANDLING

Industrial fans and blowers generally operate at high speeds with bearing requirements of long life and quiet operation. Dodge stocks a complete line of SC and SCM air handling ball bearings that are specifically designed to meet the requirements of the Air Handling Industry. However SXR air handling ball bearings in a wide variety of sizes and housing configurations can be supplied on a made/assembled to order basis. These bearings are 100% inspected for quiet operation and are recommended for fan and blower operations.

OTHER MODIFICATIONS

For applications requiring modifications not listed, we encourage you to contact our Customer Order Engineering Department at (864) 284-5700 or fax (864) 281-2317.



Eccentric SXV Collar Ball Bearings
DODGE Ball Bearing End Covers*



- Fits all styles of DODGE cast iron housed ball bearings: Pillow Blocks, 2 and 4 Bolt Flanges, and Take-Up bearings
- Injected molded, impact resistant, OSHA safety yellow end covers meet requirements for exposed rotating shafts
- Stainless steel "C" Washer for gripping power
- No modification or machining of existing housings required
- Concentric knockout grooves on inside of end cover for thru-shaft
- DODGE six digit part number and description embossed inside
- Operating temperature to 250° F
- For non relubricable/sealed for life applications (-NL), part number 430020 hex head plug is available

Nomenclature

EC - 205 - P

- EC: End Cover
- 205: ISO & ABMA ring size
- P: "Blank" fits all housing styles as noted; P - Pillow Blocks, including tapped base; X - all other housing styles as noted

Series	Pillow Blocks Std, U, B	Tapped Base PB	2 Bolt Flange	Flanged Bracket	4 Bolt Flange	Piloted Flange (FC)	Narrow Slot Take-Up	Wide Slot Take-Up
203	X		X		X			
204	X	X	X	X	X		X	X
205	X	X	X	X	X		X	X
206	X	X	X	X	X	@	X	X
207	X	X	X	X	X	@	X	X
208	X	X	X		X	@	X	X
209	X	X	X		X	@	X	X
210	X	X	X	X	X	@	X	X
211	X	X	X		X	NA	X	X
212	X		X		X	NA	X	X
214	X				X	NA		X
215	X				X			X
216	X				X	X		X
218	X				X	X		

* = Will not fit LF, LFT, SCHB, HNGR & CLY
@ = Some modification required
NA = Will not fit
X = Will fit

NOTES

CONTENTS

Take-Up Frames

Features / Benefits B19-2
How To Order B19-6
Nomenclature B19-7
Selection/Dimensions
- Narrow Slot B19-8
- Wide Slot B19-11
- ULTRA KLEEN Stainless Steel B19-12
- Telescoping B19-15
- Top Angle B19-20
- TPHU B19-24
- Center Pull B19-26
- LD Protected Screw B19-30
- HD Protected Screw B19-36
- BRONZOIL® B19-44

Part Number Index INDEX-1
Key Word Index INDEX-69

FEATURES/BENEFITS



Take-Up Frames

The flexibility of the ten basic take-up frames allow for the mounting of DODGE Ball, Roller, and Sleeve Bearings to encompass the vast range of conveyor, belt, and chain take-up applications.

Narrow Slot Take-Up Frame - NS



Five sizes of Narrow Slot Ball Bearing Take-Up Frames-Eleven (11) take-up frames with travels of 6 to 18 inches for:

- GT & GTM Narrow Slot Take-Up Bearings from 3/4” through 2-7/16” shaft size and metric 20mm to 60mm.
- SC, VSC & SCM Ball Bearing Take-Up Bearing from 1/2” through 2-7/16” shaft size, and metric 20 mm to 60 mm.
- SXV and SXR Ball Bearing Take-Up Bearing from 3/4” through 2-7/16” shaft size.
- DL Ball Bearing Take-Up Bearing from 3/4” through 1-7/16” shaft size.
- LT700 and LT1000 SOLIDLUBE Take-Up Bearing from 3/4” through 2-1/2” shaft size.

Wide Slot Take-Up Frame - WS

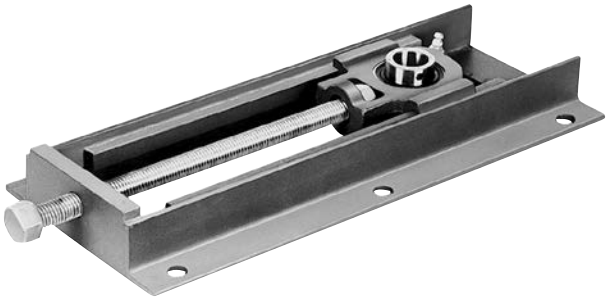

Six sizes of Wide Slot Ball Bearing Take-Up Frames-Thirty (30) take-up frames with travels of 1-1/2 to 30 inches for:

- GT & GTM Wide Slot Ball Bearings from 3/4” through 3” shaft size and metric 20mm to 75mm.
- SC, VSC and SCM Wide Slot Take-Up Bearings from 1/ 2” through 3" shaft size, and metric 20 mm to 75 mm.
- SXV and SXR Wide Slot Take-Up Bearings from 3/4” through 2-7/16” shaft size.
- DL Ball Bearing Take-Up Bearing from 1-7/16” through 1-15/16” shaft size.
- LT700 and LT1000 SOLIDLUBE Wide Slot Take-Up Bearing from 3/4” through 3" shaft size.

Telescoping Take-Up Frame - TS



Telescoping Take-Up Frames

- Space saving telescoping take-up frame quickly mounts to the side of a conveyor
- Use any standard ball or roller bearing 2-bolt pillow block
- Factory lubricated adjustment screw
- Internal take-up frame screw is protected from the surrounding environment
- Bearing mounting plate is standard on all Dodge telescoping take-up frames.

Available Options

- Four bolt mounting plate (4B)
- Tapped base mounting plate (TB)
- Weld-on frame (without mounting feet) (WF)
- Stainless Steel (SS)
- Grease Fitting (GF)

FEATURES/BENEFITS

Take-Up Frames

Top Angle Take-Up Frame - TP



Six sizes of Top Angle Take-Up Frames-Thirty-Six (36) Take-Up frames with travels of 12 to 48 inches for:

- GLT-700 & GLT-1000 Series (SOLIDLUBE Sleeve) Take-Up bearings from 1-15/16” through 3" shaft size.
- Type H (Babbitted Sleeve) Take-Up bearings from 1-15/16” through 3-15/16” shaft size.
- Type G (SC Ball Bearing) Take-Up bearings from 1-15/16” through 2-15/16” shaft size.
- Type GXR (SXR Ball Bearing) Take-Up bearings from 1-15/16” through 2-7/16” shaft size.
- Type GM (SCM Ball Bearing) Take-Up bearings from 1-11/16” through 3-1/2” shaft size.
- Type E (Tapered Roller) Take-Up bearings from 1-3/4” through 4" shaft size.
- Type K (Tapered Roller) Take-Up bearings from 1-3/4” through 3-15/16” shaft size.
- TP S2000 (Spherical Roller) Take-Up bearings from 1-7/8” through 4" shaft size.

TPHU Take-Up Frame



Six sizes of TPHU Take-Up Frames-Twenty-Four (24) Take-Up frames with travels of 12 to 36 inches for:

- TPHU S-2000 (Spherical Roller) Take-Up Bearings from 1-7/8” through 5” shaft size.

Center Pull Take-Up Frame - CP

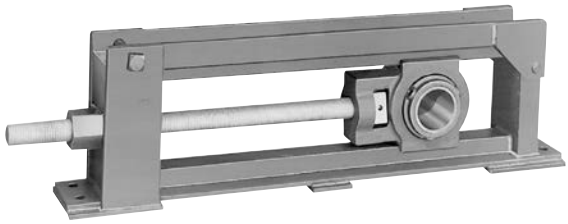

Nine sizes of Center Pull Wide Slot Take-Up Frames-Forty-five (45) take-up frames with travels of 12 to 36 inches for:

- Type E tapered wide slot bearing from 1-3/8” to 3" bore size.
- Type K tapered wide slot bearing from 1-3/8” to 3" bore size.
- S-2000 spherical wide slot bearing from 1-1/8” to 5" bore size.
- Imperial spherical wide slot bearing from 1-7/16” to 4” bore size.
- U.S. Patent No. 4,676,670

FEATURES/BENEFITS

Take-Up Frames

BRONZOIL Take-Up Frame - BOTU



One size of BRONZOIL®) Sleeve Bearing Take-Up-The BRONZOIL Take-Up is recommended for light-to-medium loads and for use at moderate speeds; such as package conveyors, light material handling installations, or other similar applications.

There are 6 take-ups from 1/2” through 1” shaft size with 4 inch travel.

Light Duty Take-Up Frame - LD



Six sizes of LD Protected Screw Take-Up Frames - Forty-Five (45) take-up frames with 6 to 48 inch travel for:

- SC/SCB (Ball Bearing) pillow blocks from 1/2” through 2-15/16” bore size.
- SXR/SXRB & SXV/SXVB (Ball Bearing) pillow blocks from 1/2” through 2-7/16” bore size
- DL/DLB (Ball Bearing) pillow blocks from 3/4” through 2-15/16” bore size.
- SCM (Ball Bearing) pillow blocks from 1-7/16” through 3-1/2” bore size.
- DLM (Ball Bearing) pillow blocks from 1” through 3-7/16” bore size
- Babbitted (Sleeve) Solid Journal bearing from 1/2” through 2-15/16” bore size.
- SOLIDLUBE (Sleeve) LT700 and LT1000 Series pillow blocks from 3/4” through 3” bore size.
- SOLIDLUBE (Sleeve) LTB700 and LTB1000 Series pillow blocks from 3/4” through 2-1/2” bore size.
- UNISPHERE (Spherical Roller) two (2) bolt base pillow block from 1-7/16” through 3-1/2” bore sizes.
- Imperial (Spherical Roller) two (2) bolt base pillow block from 1-7/16” through 3-15/16” bore size.
- SCH, SCH-E SXRH, SXRH-E, DLH, DLH-E SCMH SCMH-E, DLMH, DLMH-E.
- GT/GTB (Ball Bearing) pillow blocks from 1/2” through 2-15/16” bore size
- GTM (Ball Bearing) pillow blocks from 1” through 3-7/16” bore size

FEATURES/BENEFITS

Take-Up Frames

Heavy Duty Take-Up Frame - HD



Eight sizes of HD Protected Screw Take-Up Frames-Forty-One (41) take-up frames with travels from 12 to 60 inches for:

- Angle Babbitted (Sleeve) pillow blocks from 1-15/16” through 5-15/16”, bore size.
- Angle Bronze Bushed (Sleeve) pillow blocks from 1-15/16” through 5-15/16”, bore size.
- Type E (Taper Roller) pillow blocks from 1-1/2” through 6" bore size.
- Type K (Taper Roller) pillow blocks from 1-1/2” through 3-15/16” bore size.
- K/DI (Taper Roller) pillow blocks from 1-1/2” through 5" bore size.
- Type C (Taper Roller) pillow blocks from 1-11/16” through 5" bore size.
- Special Duty (Taper Roller) pillow blocks from 2-11/16” through 6" bore size.
- SOLIDLUBE (Sleeve) MM700 and MM1000 Series pillow blocks from 3-7/16” through 5" bore size.
- SAF-XT, TAF, ISAF, etc. (Spherical and Tapered Roller) pillow blocks from 1-15/16” through 5-1/2” bore size and larger.
- USAF, SAFS spherical pillow blocks, 2-bolt and 4-bolt from 2-7/16” through 5-1/2” bore size.
- S2000 spherical pillow blocks, 2-bolt and 4-bolt from 1-7/8” through 5" bore size.
- UNISPHERE (Spherical Roller) pillow block 2-bolt base from 1-15/16” through 4" bore sizes.
- Imperial (Spherical roller) pillow block 2-bolt and 4-bolt from 1-15/16” through 4-15/16” bore size.
- For larger bore bearings use HD600 or HD650, consult DODGE.

HOW TO ORDER



Take-Up Frames

There are two ways to specify DODGE Take-Up Frames. Most of the product offerings have part numbers with listings shown throughout this catalog. Use of part numbers ensures accurate order processing.

When part numbers are not shown, the product may be specified by description or part name. This method is used when ordering units that include modifications or options. To order by description, use the nomenclature key shown on page B19-7 and add any special instructions to the end of the description for options not covered by the nomenclature.

NOTE: All Take-Up Frames, except Bronzoil Take-Ups, are without the Take-Up Bearings. Thus, for a complete Take-Up; order a Take-Up Frame and Take-Up Bearing.

The HD Protected Screw Take-Up Frames

HD 200 through HD 350 Take-Up frames will accommodate pillow blocks on saddles which are slotted for two-bolt Pillow Blocks and may be ordered by part numbers. When using four-bolt Pillow Blocks; or on HD frames 400 and larger, please supply:

1. Bore size of pillow block
2. Type of block (Type E, Double Interlock, SAF-XT, etc.)
3. Whether pillow block is two-or four-bolt style
4. Frame Travel

Modifications:

For OEM special Take-Up Frames consult DODGE.

Certain modifications are available such as Stainless Steel Screw and non-standard travel lengths.

NOMENCLATURE



Take-Up Frames

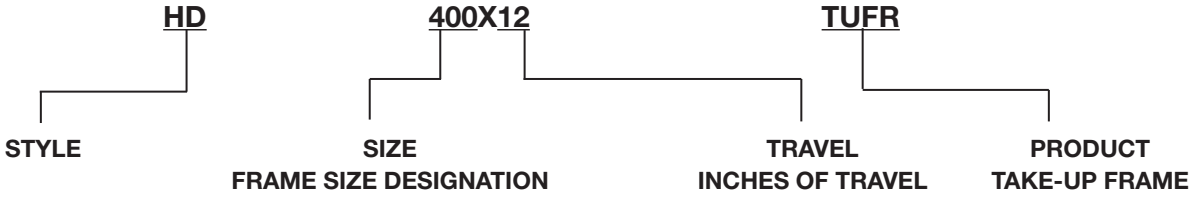

CP	Center Pull Wide Slot Take-Up Frame
WS	Wide Slot Ball Bearing Take-Up Frame
WSEZ	Ultra Kleen Wide Slot Ball Bearing Take-Up Frame
NS	Narrow Slot Ball Bearing Take-Up Frame
LD	Light Duty Protected Screw Take-Up Frame
TU	Take-Up
HD	Heavy Duty Protected Screw Take-Up Frame
TP	Top Angle Take-Up Frame
TPHU	Top Angle Heavy Duty Universal Take-Up Frame
TS	Telescoping Take-Up Frame
TUA	Type A Babbitted Take-Up Bearing
TUB	Type B Babbitted Take-Up Bearing
BOTU	BRONZOIL Take-Up
FR	Frame
SSS	Stainless Steel Screw

TU = Take-Up When Used As An Abbreviation Through This Section

SELECTION/DIMENSIONS



Take-Up Frames -NS

NARROW SLOT BALL BEARING TAKE-UP FRAMES

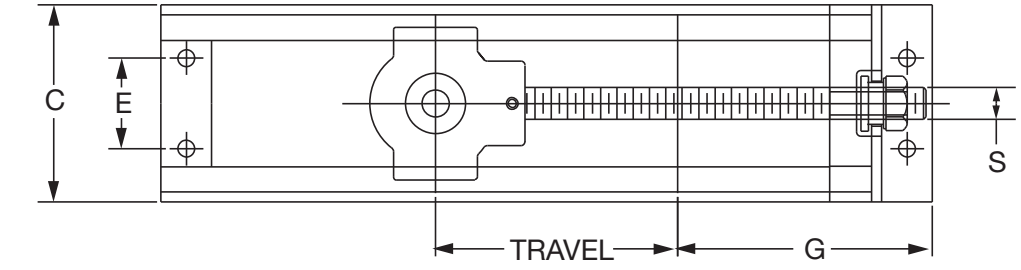

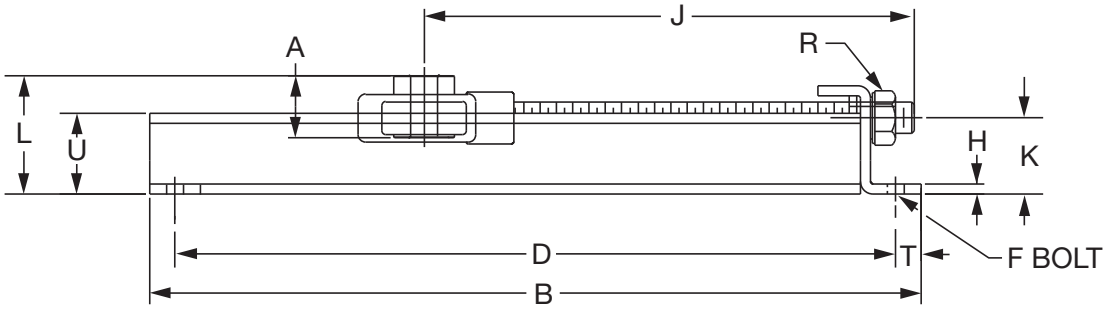

Frame Description	Part No.	Wt. (Lbs.)	A	B	C	D	E	F Base Bolt No.	F Base Bolt Dia.	G
NS-210x6-TUFR	**038109**	5.5	See page B19-10 for list of reference pages for Take-Up Bearings	13-5/8	3-13/16	12-1/8	1-5/8	4	1/2	4-7/8
NS-308x6-TUFR	**038110**	5.8		13-5/8	4-11/16	12-1/8	2-1/4	4	1/2	5-3/8
NS-308x12-TUFR	**038111**	8.0		19-5/8		18-1/8				
NS-400x6-TUFR	**038112**	9.2		14-9/16	6-1/16	13-1/16	2-1/2	4	1/2	6
NS-400x9-TUFR	**038113**	11.3		18-5/8		17-1/8				
NS-400x12-TUFR	**038114**	12.5		20-9/16		19-1/16				
NS-400x18-TUFR	**038115**	16.3		27-5/8		26-1/8				
NS-407x9-TUFR	**038116**	13.1		19-1/8	6-1/2	17-3/8	2-3/4	4	5/8	7-1/8
NS-407x18-TUFR	**038117**	18.6		28-1/8		26-3/8				
NS-415x9-TUFR	**038118**	15.5		19-1/8	7	17-3/8	3	4	5/8	7-3/8
NS-415x18-TUFR	**038119**	19.0		28-1/8		26-3/8				

Frame Description	H	J	K	L	R Hex	S	T	U	Channel
NS-210x6-TUFR	1/4	11-1/32	1-13/32	See Table on Page B19-9 for "L" Dim.	1-5/16	3/4-10	3/4	1-1/2	1-1/2 x 9/16 x 3/16
NS-308x6-TUFR	1/4	10-13/16	1-13/32		1-5/16	3/4-10	3/4	1-1/2	1-1/2 x 9/16 x 3/16
NS-308x12-TUFR		16-13/16							
NS-400x6-TUFR	1/4	11-1/16	1-7/8		1-1/2	7/8-9	3/4	2	2 x 1 x 3/16
NS-400x9-TUFR		14-1/16							
NS-400x12-TUFR		17-1/16							
NS-400x18-TUFR		23-1/16							
NS-407x9-TUFR	5/16	15-19/32	1-7/8		1-5/8	1-8	1	2	2 x 1 x 3/16
NS-407x18-TUFR		24-19/32							
NS-415x9-TUFR	5/16	15-27/32	1-7/8		1-5/8	1-8	1	2	2 x 1 x 3/16
NS-415x18-TUFR		24-27/32							

SELECTION/DIMENSIONS



Take-Up Frames - Narrow Slot Frame

L DIMENSION

Series	Shaft Size	Take Up Frame No. Ref.	L					
			SC	VSC	SXR	SXV	DL	GT
204	1/2 5/8 3/4	NS-210	2.11	2.11	2.43	2.30	2.16	2.40
205	7/8 15/16 1	NS-210	2.16	2.16	2.44	2.30	2.26	2.36
206	1-1/16 1-1/8 1-3/16 1-1/4	NS-308	2.32	2.32	2.57	2.43	2.36	2.97
207	1-1/4 1-5/16 1-3/8 1-7/16	NS-308	2.42	2.42	2.66	2.54	2.46	2.46
208	1-1/2 1-5/8	NS-400	3.03	3.03	3.21	3.12	3.10	3.07
209	1-5/8 1-11/16 1-3/4	NS-400	3.03	3.03	3.22	3.10	3.10	3.07
210	1-15/16 2	NS-400	3.03	3.03	3.34	3.10	3.10	3.07
211	2 2-3/16 2-1/4	NS-407	3.19	3.19	3.55	3.13	3.21	3.10
212	2-1/4 2-7/16	NS-415	3.26	N/A	3.68	N/A	3.32	3.23

Series	Shaft Size	Take Up Frame No. Ref.	L		
			SCM	DLM	GTM
206	1	NS-308	2.32	2.36	2.47
207	1-3/16 1-1/4	NS-308	2.42	2.46	2.46
208	1-7/16	NS-400	3.03	3.10	3.07
209	1-1/2 1-5/8	NS-400	3.03	3.10	3.07
210	1-11/16 1-3/4	NS-400	3.03	3.10	3.07
211	1-15/16 2	NS-407	3.19	3.21	3.10
212	2-3/16 2-1/4	NS-415	3.26	3.32	3.23

SELECTION/DIMENSIONS



Narrow Slot (NS) Take-Up Frame Bearings

NORMAL DUTY
SETSCREW - SC, VSC
D-LOK - DL
ECCENTRIC LOCK - SXR, SXV
GRIP TIGHT - GT

Series	Shaft Size	Frame Size
204	1/2 5/8 3/4 20mm	NS-210
205	7/8 15/16 1 25mm	NS-210
206	1-1/16 1-1/8 1-3/16 1-1/4 30mm	NS-308
207	1-1/4 1-5/16 1-3/8 1-7/16 35mm	NS-308
208	1-1/2 1-5/8 40mm	NS-400
209	1-5/8 1-11/16 1-3/4 45mm	NS-400
210	1-15/16 2 50mm	NS-400
211	2 2-3/16 2-1/4 55mm	NS-407
212	2-1/4 2-7/16 60mm	NS-415

- Narrow Slot Take-Up Frames Are Not Supplied With Bearings. First Match The Take-Up Frame With The Bearing Size From This Page. Then Turn To The Page Listed For The Specific Bearing Part Number.
- Grip Tight (GT and GTM) - B5-50 to B5-53
- Setscrew (SC, SCM & VSC) - B4-68 to B4-71
- Eccentric Lock (SXR and SXV) -B7-32 to B7-33
- D-LOK (DL and DLM) - B6-42 to B6-45
- See B19-8 For Narrow Slot Take-Up Frame Travel Options And Part Numbers

MEDIUM DUTY
SETSCREW - SCM
D-LOK - DLM
GRIP TIGHT - GTM

Series	Shaft Size	Frame Size
206	1 25mm	NS-308
207	1-3/16 1-1/4 30mm	NS-308
208	1-7/16 35mm	NS-400
209	1-1/2 40mm	NS-400
210	1-11/16 1-3/4 45mm	NS-400
211	1-15/16 2 50mm	NS-407
212	2-3/16 2-1/4 55mm	NS-415

DODGE®



Take-Up Frames - WS

WIDE SLOT BALL BEARING TAKE-UP FRAMES

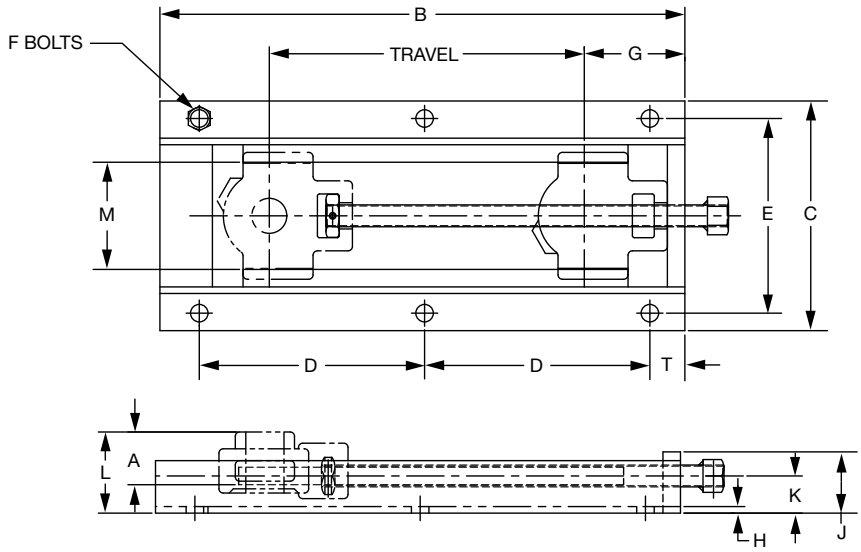

Frame Description	Part No.	Wt.	A	B	C	D	E	F No.	F Dia.	G	H	J	K	M	S Screw Dia.	T
WS-300X1-1/2-TUFR	**038200**	4.8	See chart on page B19-14 for list of reference pages for Take-Up Bearings	7-1/2	6-9/16	5-3/8	5-9/16	4	7/16	2-15/16	3/16	1-3/4	1-1/16	3-1/16	5/8	1
WS-300X3-TUFR	**038201**	5.5		9		6-7/8		4								
WS-300X6-TUFR	**038202**	7		12		4-15/16		6								
WS-300X9-TUFR	**038203**	8.5		15		6-7/16		6								
WS-300X12-TUFR	**038204**	10		18		7-15/16		6								
WS-308X3-TUFR	**038205**	7.5		9-1/8	7-1/16	6-7/16	6-1/16	4	7/16	3-11/16	3/16	2	1-1/4	3-9/16	3/4	1
WS-308X6-TUFR	**038206**	9		12-1/8		9-7/16		4								
WS-308X9-TUFR	**038207**	10.5		15-1/8		6-7/32		6								
WS-308X12-TUFR	**038208**	12		18-1/8		7-23/32		6								
WS-308X18-TUFR	**038209**	15		24-1/8		10-23/32		6								
WS-400X3-TUFR	**038210**	11.5	See Table on Page B19-13 for "L" Dim.	10-3/4	8-13/16	8-1/2	7-5/16	4	1/2	4-5/16	3/16	2-1/4	1-7/16	4-1/16	1	1-1/8
WS-400X6-TUFR	**038211**	14		13-3/4		11-1/2		4								
WS-400X9-TUFR	**038212**	16.5		16-3/4		7-1/4		6								
WS-400X12-TUFR	**038213**	19		19-3/4		8-3/4		6								
WS-400X18-TUFR	**038214**	24		25-3/4		11-3/4		6								
WS-502X6-TUFR	**038215**	20		14-3/4	10-7/16	12-1/2	8-5/8	4	9/16	5-11/16	3/16	2-1/2	1-1/2	5-3/16	1-1/4	1-1/8
WS-502X9-TUFR	**038216**	23.5		17-3/4		15-1/2		4								
WS-502X12-TUFR	**038217**	27		20-3/4		9-1/4		6								
WS-502X15-TUFR	**038218**	30.5		23-3/4		10-3/4		6								
WS-502X18-TUFR	**038219**	34		26-3/4		12-1/4		6								
WS-502X24-TUFR	**038220**	41		32-3/4		15-1/4		6								
WS-515X9-TUFR	**038221**	36		20-7/8	12	17-1/2	10-1/4	4	5/8	6-1/2	1/4	3	2	6	1-1/2	2-1/2
WS-515X12-TUFR	**038222**	41		23-7/8		10-1/4		6								
WS-515X18-TUFR	**038223**	51		29-7/8		13-1/4		6								
WS-515X24-TUFR	**038224**	61		35-7/8		16-1/4		6								
WS-515X30-TUFR	**038225**	71		41-7/8		19-1/4		6								
WS-608X12-TUFR	**038226**	41		23-7/8	12-9/16	10-1/4	10-13/16	6	5/8	6-1/2	1/4	3	2	6-9/16	1-1/2	2-1/2
WS-608X18-TUFR	**038227**	51		29-7/8		13-1/4		6								
WS-608X24-TUFR	**038228**	61		35-7/8		16-1/4		6								
WS-608X30-TUFR	**038229**	71		41-7/8		19-1/4		6								

FEATURES/BENEFITS PAGE B19-2	HOW TO ORDER/NOMENCLATURE PAGE B19-7	SELECTION/DIMENSIONS PAGE B19-8

SELECTION/DIMENSIONS

Take-Up Frames - WS

ULTRA KLEEN (Stainless Steel) WIDE SLOT BALL BEARING TAKE-UP FRAME

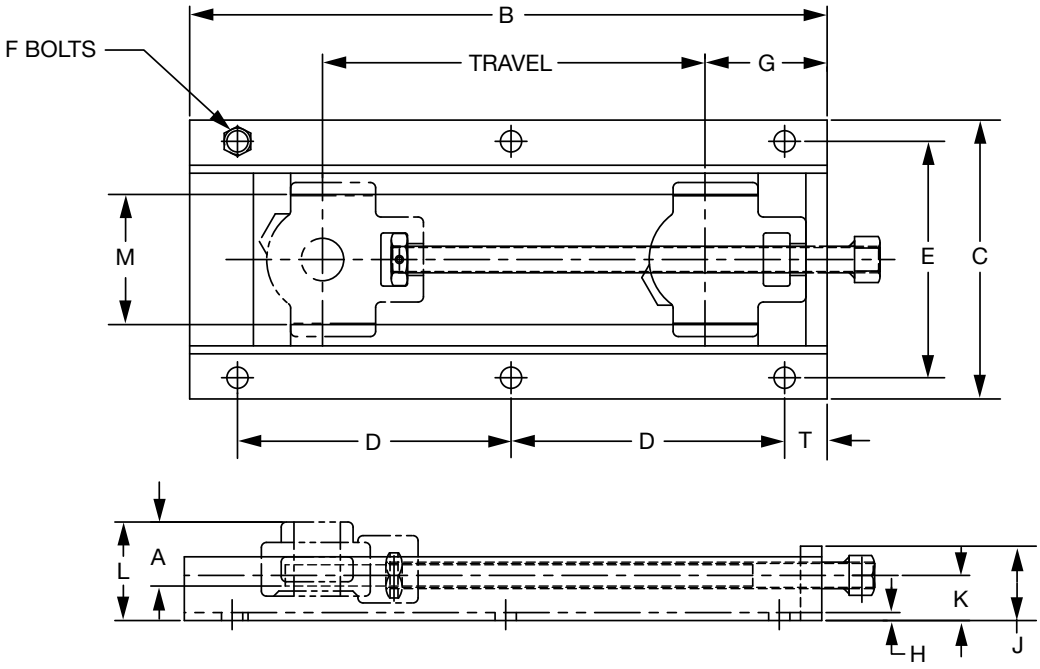

Frame Description	Part No.	Wt.	A	B	C	D	E	F		G	H	J	K	M	S Screw Dia.	T
								No.	Dia.							
WSEZ-300X3-TUFR-SSS	**038070**	6	See page B2-66 to B2-71 for E-Z KLEEN Wide Slot Take-Up Bearings	9	6-9/16	6-7/8	5-9/16	4	1/2	2-15/16	3/16	1-3/4	1-1/16	3-1/16	5/8	1
WSEZ-300X6-TUFR-SSS	**038071**	7.9		12		4-15/16		6								
WSEZ-300X9-TUFR-SSS	**038072**	9.8		15		6-7/16		6								
WSEZ-300X12-TUFR-SSS	**038073**	11.7		18		7-15/16		6								
WSEZ-308X3-TUFR-SSS	**038074**	7.3		9-1/8	7-1/16	6-7/16	6-1/16	4	1/2	3-11/16	3/16	2	1-1/4	3-9/16	3/4	1
WSEZ-308X6-TUFR-SSS	**038075**	9.4		12-1/8		9-7/16		4								
WSEZ-308X9-TUFR-SSS	**038076**	11.4		15-1/8		6-7/32		6								
WSEZ-308X12-TUFR-SSS	**038077**	13.4		18-1/8		7-23/32		6								
WSEZ-308X18-TUFR-SSS	**038078**	17.4		24-1/8		10-23/32		6								
WSEZ-400X3-TUFR	**038060**	11.5	See Table on Page B19-13 for "L" Dim.	10-3/4	8-13/16	8-1/2	7-5/16	4	1/2	4-5/16	3/16	2-1/4	1-7/16	4-1/16	1	1-1/8
WSEZ-400X6-TUFR	**038061**	14		13-3/4		11-1/2		4								
WSEZ-400X9-TUFR	**038062**	16.5		16-3/4		7-1/4		6								
WSEZ-400X12-TUFR	**038063**	19		19-3/4		8-3/4		6								
WSEZ-400X18-TUFR	**038064**	24		25-3/4		11-3/4		6								

See table on page B19-13 for "L" dimension.



Take-Up Frames - Wide Slot Frame
L DIMENSION

Series	Shaft Size	Take Up Frame No. Ref.	L				
			VSC SC	SXR	SXV	DL	GT
204	1/2 5/8 3/4	WS-300	1.79	2.11	1.98	1.84	2.08
205	7/8 15/16 1	WS-300	1.84	2.12	1.98	1.94	2.04
206	1-1/16 1-1/8 1-3/16 1-1/4	WS-308	2.19	2.44	2.30	2.23	2.34
207	1-1/4 1-5/16 1-3/8 1-7/16	WS-308	2.29	2.53	2.41	2.33	2.33
208	1-1/2 1-5/8	WS-400	2.63	2.81	2.72	2.70	2.67
209	1-5/8 1-11/16 1-3/4	WS-400	2.63	2.786	2.70	2.70	3.67
210	1-15/16 2	WS-400	2.63	2.94	2.70	2.70	2.67
211	2 2-3/16 2-1/4	WS-502	2.85	3.21	2.79	2.87	2.76
212	2-1/4 2-7/16	WS-502	2.91	3.34	N/A	2.98	2.89
214	2-1/2 2-11/16	WS-515	3.48	N/A	N/A	3.54	3.55
215	2-15/16	WS-515	3.47	4.16	N/A	3.58	3.60

Series	Shaft Size	Take Up Frame No. Ref.	L		
			SCM	DLM	GTM
206	1	WS-308	2.19	2.23	2.34
207	1-3/16 1-1/4	WS-308	2.29	2.33	2.33
208	1-7/16	WS-400	2.63	2.70	2.67
209	1-1/2	WS-400	2.63	2.70	2.67
210	1-11/16 1-3/4	WS-400	2.63	2.70	2.67
211	1-15/16 2	WS-502	2.85	2.87	2.76
212	2-3/16 2-1/4	WS-502	2.91	2.98	2.89
214	2-7/16 2-1/2	WS-515	3.48	3.54	3.55
215	2-11/16	WS-515	3.47	3.58	3.60
216	2-15/16 3	WS-608	3.50	3.74	3.81

FEATURES/BENEFITS PAGE B19-2	HOW TO ORDER/NOMENCLATURE PAGE B19-7	SELECTION/DIMENSIONS PAGE B19-8

SELECTION/DIMENSIONS



Wide Slot (WS) Take-Up Frame Bearings

NORMAL DUTY
SETSCREW - SC, VSC
D-LOK - DL
ECCENTRIC LOCK - SXR, SXV
GRIP TIGHT - GT

Series	Shaft Size	Frame Size
204	1/2 5/8 3/4 20mm	WS-300
205	7/8 15/16 1 25mm	WS-300
206	1-1/16 1-1/8 1-3/16 1-1/4 30mm	WS-308
207	1-1/4 1-5/16 1-3/8 1-7/16 35mm	WS-308
208	1-1/2 1-5/8 40mm	WS-400
209	1-5/8 1-11/16 1-3/4 45mm	WS-400
210	1-15/16 2 50mm	WS-400
211	2 2-3/16 2-1/4 55mm	WS-502
212	2-1/4 2-7/16 60mm	WS-502
214	2-1/2 2-11/16 70mm	WS-515
215	2-15/16 75mm	WS-515

- Wide Slot Take-Up Frames Are Not Supplied With Bearings. First Match The Take-Up Frame With The Bearing Size From This Page. Then Turn To The Page Listed For The Specific Bearing Part Number.
- EZ-KLEEN Polymer Housing - B2-66 to B2-71
- Grip Tight (GT & GTM) - B5-54 to B5-59
- Setscrew (SC, SCM & VSC) - B8-20 to B8-23
- Eccentric Lock (SXR and SXV) - B7-34 to B7-35
- D-LOK (DL and DLM) - B6-46 to B6-49
- See B19-11 For Wide Slot Take-Up Frame Travel Options And Part Numbers

MEDIUM DUTY
SETSCREW - SCM, VSC
D-LOK - DLM
GRIP TIGHT - GTM

Series	Shaft Size	Frame Size
206	1 25mm	WS-308
207	1-3/16 1-1/4 30mm	WS-308
208	1-7/16 35mm	WS-400
209	1-1/2 40mm	WS-400
210	1-11/16 1-3/4 45mm	WS-400
211	1-15/16 2 50mm	WS-502
212	2-3/16 2-1/4 55mm	WS-502
214	2-7/16 2-1/2	WS-515
215	2-11/16 70mm	WS-515
216	2-15/16 3 75mm	WS-608

SELECTION/DIMENSIONS



Telescoping (TS) Take-Up Frame

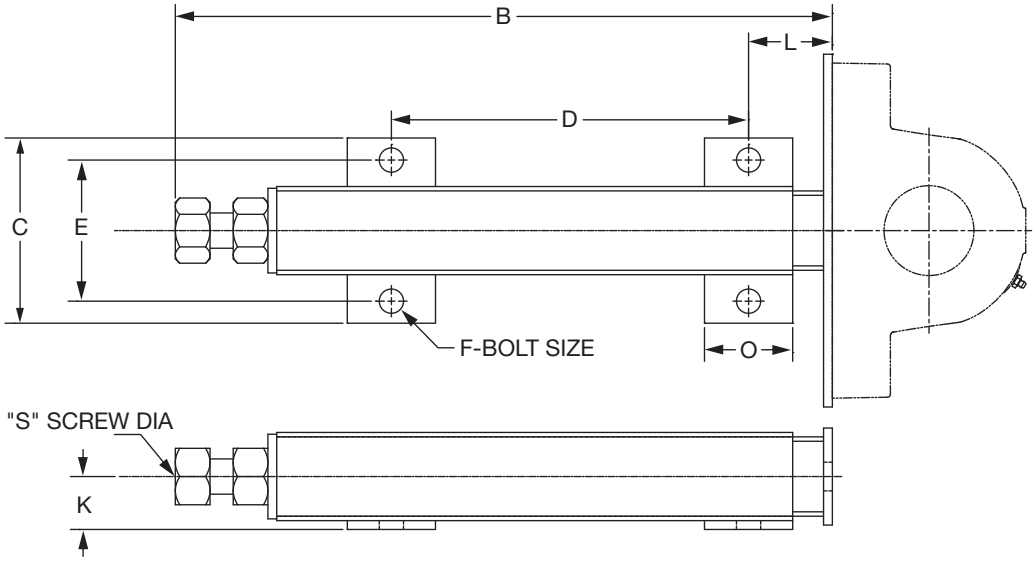

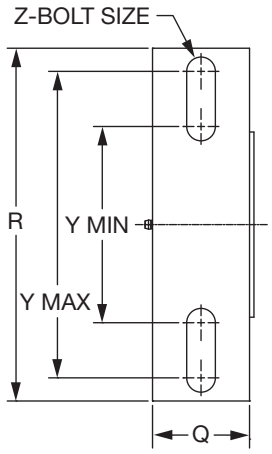

Frame Size	Travel	Part No.	Wt. (lbs.)	B	C	D		E	F Bolt Dia.	K	L	O	Q	R	S Scr. Dia.	Y		Z Bolt Dia.
						Min.	Max.									Min.	Max.	
TS-100	3	**089782**	3	7.94	3.69	3.56	-	2.63	1/2	0.88	1.50	1.50	1.50	6.38	5/8	2.94	5.44	1/2
TS-100	6	**089783**	4	11.44	3.69	7.06	-	2.63	1/2	0.88	1.50	1.50	1.50	6.38	5/8	2.94	5.44	1/2
TS-100	9	**089784**	5	15.44	3.69	11.06	-	2.63	1/2	0.88	1.50	1.50	1.50	6.38	5/8	2.94	5.44	1/2
TS-250	3	**089785**	5	9.75	4.00	4.38	-	3.00	1/2	1.13	1.88	2.00	2.00	7.00	3/4	3.81	5.69	5/8
TS-250	6	**089786**	7	12.75	4.00	7.38	-	3.00	1/2	1.13	1.88	2.00	2.00	7.00	3/4	3.81	5.69	5/8
TS-250	9	**089787**	8	15.75	4.00	10.38	-	3.00	1/2	1.13	1.88	2.00	2.00	7.00	3/4	3.81	5.69	5/8
TS-250	12	**089788**	9	18.75	4.00	13.38	-	3.00	1/2	1.13	1.88	2.00	2.00	7.00	3/4	3.81	5.69	5/8
TS-300	6	**089789**	16	15.63	5.25	6.13	-	4.00	5/8	1.50	2.38	2.50	2.75	10.00	1	5.56	8.69	3/4
TS-300	9	**089790**	18	18.63	5.25	10.13	-	4.00	5/8	1.50	2.38	2.50	2.75	10.00	1	5.56	8.69	3/4
TS-300	12	**089791**	21	21.63	5.25	14.13	-	4.00	5/8	1.50	2.38	2.50	2.75	10.00	1	5.56	8.69	3/4
TS-300	18	**089792**	26	27.63	5.25	21.13	-	4.00	5/8	1.50	2.38	2.50	2.75	10.00	1	5.56	8.69	3/4
TS-350	9	**089793**	24	19.56	5.75	12.63	13.00	4.50	5/8	1.75	2.50	2.50	3.00	12.00	1	5.56	9.75	3/4
TS-350	12	**089794**	28	22.56	5.75	15.63	16.00	4.50	5/8	1.75	2.50	2.50	3.00	12.00	1	5.56	9.75	3/4
TS-350	18	**089795**	35	28.56	5.75	21.63	22.00	4.50	5/8	1.75	2.50	2.50	3.00	12.00	1	5.56	9.75	3/4
TS-350	24	**089796**	43	34.56	5.75	27.63	28.00	4.50	5/8	1.75	2.50	2.50	3.00	12.00	1	5.56	9.75	3/4
TS-400	12	**089797**	50	29.75	7.50	20.00	-	5.50	3/4	2.13	3.50	3.50	3.50	14.00	1-1/2	8.50	11.75	7/8
TS-400	18	**089798**	60	35.75	7.50	26.00	-	5.50	3/4	2.13	3.50	3.50	3.50	14.00	1-1/2	8.50	11.75	7/8
TS-400	24	**089799**	70	41.75	7.50	32.00	-	5.50	3/4	2.13	3.50	3.50	3.50	14.00	1-1/2	8.50	11.75	7/8
TS-400	36	**089800**	90	53.75	7.50	44.00	-	5.50	3/4	2.13	3.50	3.50	3.50	14.00	1-1/2	8.50	11.75	7/8
TS-400	48	**089801**	110	65.75	7.50	56.00	-	5.50	3/4	2.13	3.50	3.50	3.50	14.00	1-1/2	8.50	11.75	7/8
TS-500	18	**089802**	210	43.88	11.50	31.00	-	9.00	1	3.50	3.88	3.88	7.00	20.00	2	Drilled to Order	Drilled to Order	Drilled to Order
TS-500	24	**089803**	240	49.88	11.50	37.00	-	9.00	1	3.50	3.88	3.88	7.00	20.00	2			
TS-500	36	**089804**	290	61.88	11.50	49.00	-	9.00	1	3.50	3.88	3.88	7.00	20.00	2			

Dimensions in inches

SELECTION/DIMENSIONS



Telescoping (TS) Take-Up Frame Bearings

NORMAL DUTY
SETSCREW - SC, VSC
D-LOK - DL
ECCENTRIC LOCK - SXR, SXV
GRIP TIGHT - GT

Series	Shaft Size	Frame Size
204	1/2 5/8 3/4 20mm	TS-100
205	7/8 15/16 1 25mm	TS-100
206	1-1/16 1-1/8 1-3/16 1-1/4 30mm	TS-250
207	1-1/4 1-5/16 1-3/8 1-7/16 35mm	TS-250
208	1-1/2 1-5/8 40mm	TS-250
209	1-5/8 1-11/16 1-3/4 45mm	TS-250
210	1-15/16 2 50mm	TS-300
211	2 2-3/16 2-1/4 55mm	TS-300
212	2-1/4 2-7/16 60mm	TS-300
214	2-1/2 2-11/16 70mm	TS-300
215	2-15/16 75mm	TS-350 or TS-400

- Telescoping Take-Up Frames Are Not Supplied With Bearings. First Match The Take-Up Frame With The Bearing Size From This Page. Then Turn To The Page Listed For The Specific Bearing Part Number.
- EZ-KLEEN Polymer Housing - B2-66 to B2-71
- Grip Tight (GT & GTM) - B5-54 to B5-59
- Setscrew (SC, SCM & VSC) - B8-20 to B8-23
- Eccentric Lock (SXR and SXV) - B7-34 to B7-35
- D-LOK (DL and DLM) - B6-46 to B6-49
- See B19-15 For Telescoping (TS) Take-Up Frame Travel Options And Part Numbers

MEDIUM DUTY
SETSCREW - SCM, VSC
D-LOK - DLM
GRIP TIGHT - GTM

Series	Shaft Size	Frame Size
206	1 25mm	TS-250
207	1-3/16 1-1/4 30mm	TS-250
208	1-7/16 35mm	TS-250
209	1-1/2 40mm	TS-250
210	1-11/16 1-3/4 45mm	TS-300
211	1-15/16 2 50mm	TS-300
212	2-3/16 2-1/4 55mm	TS-300
214	2-7/16 2-1/2	TS-300
215	2-11/16 70mm	TS-350
216	2-15/16 3 75mm	TS-350 or TS-400



Telescoping (TS) Take-Up Frame Bearings

TAPERED ROLLER BEARINGS

Type E

Shaft Size	Frame Size
1-3/16 to 1-1/4	TS-250
1-3/8 to 2-3/16	TS-300
1-1/2 to 2-3/16	TS-300
2-1/4 to 2-1/2	TS-350
2-11/16 to 3	TS-400
3-3/16 to 3-1/2	TS-400
3-15/16 to 5	TS-500

Type K Double Interlock

Shaft Size	Frame Size
1-1/2 to 2-3/16	TS-300
2-1/4 to 2-1/2	TS-350
2-11/16 to 3	TS-400
3-3/16 to 3-1/2	TS-500
3-15/16 to 4-1/2	TS-500
4-15/16 to 5	TS-500

TAF

Shaft Size	Frame Size
2-7/16 to 2-1/2	TS-400
2-15/16 to 3	TS-400
3-7/16 to 4	TS-500
4-7/16 to 5	TS-500

- Type K - B10-40
- Type E - B10-22
- DOUBLE INTERLOCK - B10-50
- TAF - B10-58
- See B19-15 For Telescoping (TS) Take-Up Frame Travel Options and Part Numbers

SELECTION/DIMENSIONS



Telescoping (TS) Take-Up Frame Bearings

UNITIZED SPHERICAL ROLLER BEARINGS

Imperial - IP

Shaft Size	Frame Size
1-1/8 to 1-1/2	TS-250
1-5/8 to 2-1/4	TS-300
2-3/8 to 2-1/2	TS-350
2-11/16 2-3/4 2-15/16 3	TS-400
3-3/16 3-1/4 3-7/16 3-1/2	TS-400
3-11/16 3-15/16 4 4-7/16 4-1/2	TS-500
4-15/16 5	TS-500

S-2000

Shaft Size	Frame Size
1-3/8 1-7/16 1-1/2	TS-250
1-11/16 1-3/4 1-15/16 2 2-3/16	TS-300
2-7/16	TS-350
2-11/16	TS0400
2-15/16 3	TS-400
3-7/16	TS-400
3-15/16 4-7/16	TS-500
4-15/16	TS-500

UNISPHERE II

Shaft Size	Frame Size
1-7/16 1-1/2 1-11/16 1-3/4	
1-15/16 2 2-3/16 2-7/16 2-1/2	TS-300
2-11/16 2-3/4 2-15/16 3	TS-350
3-7/16 3-1/2	TS-400
3-15/16 4	TS-400 or TS-500

IMPERIAL & S2000 With Type E Dimensions

Shaft Size	Frame Size
1-3/16 to 1-1/4	TS-250
1-3/8 to 2-3/16	TS-300
2-1/4 to 2-1/2	TS-350
2-11/16 to 3	TS-400
3-3/16 to 3-1/2	TS-400
3-15/16 to 5	TS-500

- S-2000 - B12-14 to B12-25
- IMPERIAL - B14-30 to B14-37
- UNISPHERE - B13-12 to B3-13
- See B19-15 For Telescoping (TS) Take-Up Frame Travel Options and Part Numbers



Telescoping (TS) Take-Up Frame Bearings

UNIFIED SPHERICAL ROLLER BEARINGS

USAF-500
SAF-XT
SAFS
ISAF

Shaft Size	Frame Size
1-15/16	TS-300 or TS-350
2-3/16	TS-400
2-7/16 to 3	TS-400
3-3/16	TS-500
3-7/16 to 3-1/2	TS-500
3-15/16 to 4-1/2	TS-500
4-15/16	TS-500

- IMPERIAL - B14-52 to B14-57
- USAF-500 - B15-78 to B15-81
- SAF-XT - B15-64 to B15-74
- SAFS - B15-61 to B15-63
- See B19-15 For Telescoping (TS) Take-Up Frame Travel Options and Part Numbers

SELECTION/DIMENSIONS

Take-Up Frames - TP

TOP ANGLE PROTECTED SCREW TAKE-UP FRAMES

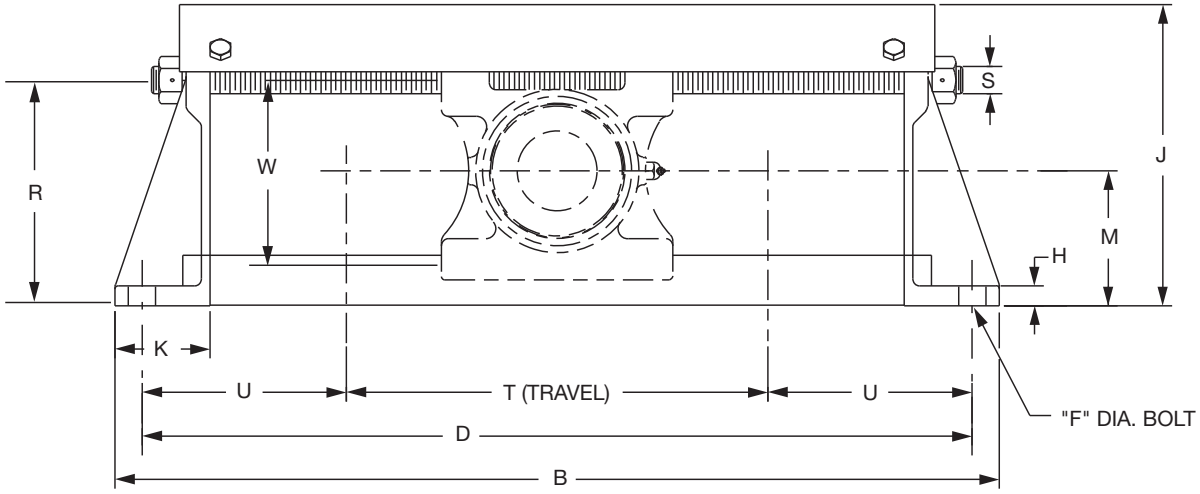

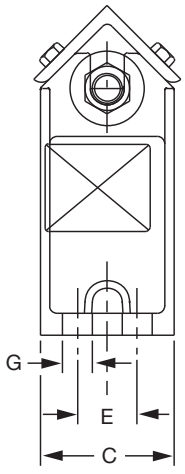

SELECTION/DIMENSIONS



Take-Up Frames - TP

TOP ANGLE PROTECTED SCREW TAKE-UP FRAMES

Frame Size	Nominal Travel	Part No.	Wt.	B	C	D	E	F Bolt Dia.	G	H
TP10	12	**036350**	32	28-1/2	3-1/2	26-1/2	-	5/8	1	3/4
	18	**036351**	36	34-1/2		32-1/2				
	24	**036352**	41	40-1/2		38-1/2				
TP20	12	**036353**	34	29-1/2	3-1/2	27-1/2	-	5/8	1	3/4
	18	**036354**	39	35-1/2		33-1/2				
	24	**036355**	43	41-1/2		39-1/2				
TP30	12	**036356**	47	30-1/2	4	28-1/2	-	3/4	1-5/16	3/4
	18	**036357**	54	36-1/2		34-1/2				
	24	**036358**	60	42-1/2		40-1/2				
TP40	12	**036359**	52	32-1/2	4-1/2	30-1/2	2	5/8	1	3/4
	18	**036360**	60	38-1/2		36-1/2				
	24	**036361**	66	44-1/2		42-1/2				
TP50	12	**036362**	63	34-1/2	4-1/2	32	2	3/4	1	3/4
	18	**036363**	70	40-1/2		38				
	24	**036364**	79	46-1/2		44				
TP60	12	**036365**	84	38-1/2	5-1/2	36	2-1/2	3/4	1	3/4
	18	**036366**	92	44-1/2		42				
	24	**036367**	102	50-1/2		48				

Frame Size	Nominal Travel	Part No.	J	K	M	R	S Screw Dia.	T	U	W
TP10	12	**036350**	8-1/2	3	3-15/16	6-11/32	3/4	14-1/2	6	5-5/32
	18	**036351**		3				20-1/2		
	24	**036352**		3				26-1/2		
TP20	12	**036353**	9-1/8	3	4-3/16	6-31/32	3/4	15	6-1/4	5-25/32
	18	**036354**		3				21		
	24	**036355**		3				27		
TP30	12	**036356**	10-1/8	3-1/2	4-3/8	7-3/8	1	14-1/2	7	6-3/16
	18	**036357**		3-1/2				20-1/2		
	24	**036358**		3-1/2				26-1/2		
TP40	12	**036359**	11-1/16	3-1/2	4-15/16	8-3/8	1	15-1/2	7-1/2	7-3/16
	18	**036360**		3-1/2				21-1/2		
	24	**036361**		3-1/2				27-1/2		
TP50	12	**036362**	12-1/2	4	5-7/16	9-13/32	1-1/4	15	8-1/2	8-7/32
	18	**036363**		4				21		
	24	**036364**		4				27		
TP60	12	**036365**	14-1/4	4-1/2	7	11-11/32	1-1/4	16-1/2	9-5/8	8-29/32
	18	**036366**		4-1/2				22-1/2		
	24	**036367**		4-1/2				28-1/2		

Eccentric Collar Ball Bearing
Setscrew VSC Ball Bearing
Eccentric SXV Collar Ball Bearing
Take-Up Frames
Engineering
Part Number Index
Keyword Index

SELECTION/DIMENSIONS



Top Angle (TP) Take-Up Frame Bearings

BALL BEARINGS

NORMAL DUTY
SETSCREW - G
D-LOK - DL
ECCENTRIC LOCK - GXR
GRIP TIGHT-GT

Series	Shaft Size	Frame Size
210	1-15/16 2	TP-10
211	2-3/16 2-1/4	TP-20
212	2-7/16	TP-30
215	2-15/16	TP-40

- Top Angle Take-Up Frames Are Not Supplied With Bearings. First Match The Take-Up Frame With The Bearing Size From This Page. Then Turn To The Page Listed For The Specific Bearing Part Number.
- Grip Tight (GT & GTM) -B5-60 to B5-61
- Setscrew (G, & GM) - B4-80 to B4-81
- Eccentric Lock (GXR) - B7-36
- D-LOK (DL and DLM) - B6-50 to B6-51
- See B19-21 For Top Angle Take-Up Frame Travel Options And Part Numbers.

MEDIUM DUTY
SETSCREW - GM
D-LOK - DLM
GRIP TIGHT - GTM

Series	Shaft Size	Frame Size
210	1-11/16 1-3/4	TP-10
211	1-15/16 2	TP-20
212	2-3/16 2-1/4	TP-30
214	2-7/16 2-1/2	TP-40
215	2-11/16	TP-40
216	2-15/16 3	TP-50
218	3-7/16 3-1/2	TP-60

TAPERED ROLLER BEARINGS

TYPE E

Shaft Size	Frame Size
1-3/4 1-7/8 1-15/16 2	TP-10
2-3/16	TP-20
2-1/4 2-7/16 2-1/2	TP-30
2-11/16 2-3/4 2-15/16 3	TP-40
3-3/16 3-1/4 3-7/16 3-1/2	TP-50
3-15/16 4	TP-60

- Top Angle Take-Up Frames Are Not Supplied With Bearings. First Match The Take-Up Frame With The Bearing Size From This Page. Then Turn To The Page Listed For The Specific Bearing Part Number.
- Type E - B10-73
- Type K - B10-48
- See B19-21 For Top Angle Take-Up Frame Travel Options And Part Numbers.

TYPE K

Shaft Size	Frame Size
1-3/4 1-15/16 2	TP-10
2-3/16	TP-20
2-1/4 2-7/16 2-1/2	TP-30
2-11/16 2-3/4 2-15/16 3	TP-40
3-3/16 3-7/16 3-1/2	TP-50
3-15/16	TP-60

SELECTION/DIMENSIONS



Top Angle (TP) Take-Up Frame Bearings

SPHERICAL ROLLER BEARINGS

S-2000

Shaft Size	Frame Size
1-15/16 2	TP-10
2-3/16	TP-30
2-7/16	TP-40
2-11/16 2-15/16 3	TP-40
3-7/16	TP-50
3-15/16	TP-60

- Top Angle Take-Up Frames Are Not Supplied With Bearings. First Match The Take-Up Frame With The Bearing Size From This Page. Then Turn To The Page Listed For The Specific Bearing Part Number.
- S-2000- B12-10
- See B19-21 For Top Angle Take-Up Frame Travel Options And Part Numbers.

SLEEVE BEARINGS

SOLID LUBE BEARING

LT-700

LT-1000

Shaft Size	Frame Size
1-15/16 2	TP-10
2-3/16	TP-20
2-7/16 2-1/2	TP-30
2-15/16 3	TP-40

- Top Angle Take-Up Frames Are Not Supplied With Bearings. First Match The Take-Up Frame With The Bearing Size From This Page. Then Turn To The Page Listed For The Specific Bearing Part Number.
- SOLIDLUBE Sleeve Bearing (LT7 & LT10) - B17-10
- Type H Babbitted Bearing - B7-48
- See B19-21 For Top Angle Take-Up Frame Travel Options And Part Numbers.

BABBITTED BEARING

TYPE H

Shaft Size	Frame Size
1-15/16	TP-10
2-3/16	TP-10
2-7/16	TP-30
2-15/16	TP-30
3-7/16	TP-50
3-15/16	TP-50

SELECTION/DIMENSIONS

Take-Up Frames - TPHU

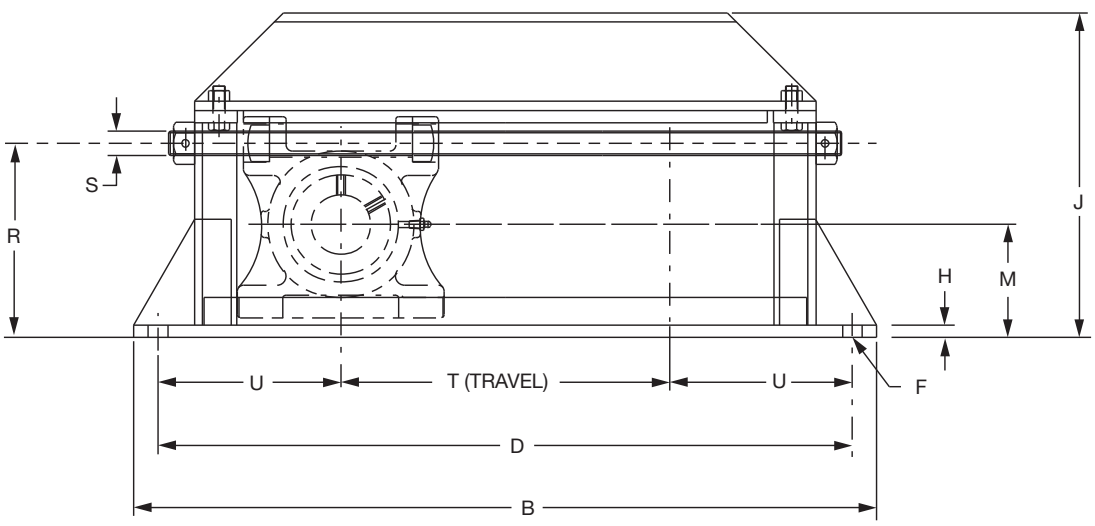

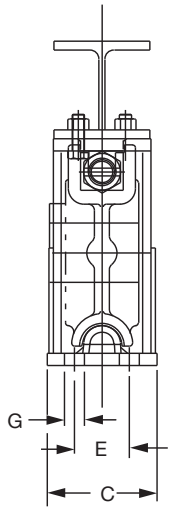

Shaft Size	Frame Size	Nom. Travel	Part No.	Wt.	B	C	D	E	F Bolt Dia	G
1-7/8		12	**013497**	58	29-1/2		27-1/2			
1-15/16	TPHU110	18	**013498**	70	35-1/2	3-1/2	33-1/2	-	5/8	11/16
2		24	**013499**	82	41-1/2		39-1/2			
		12	**013900**	71	29-1/2		27-1/2			
2-3/16 2-1/4	TPHU120	18	**013901**	85	35-1/2	4-1/2	33-1/2	-	5/8	11/16
		24	**013902**	99	41-1/2		39-1/2			
2-3/8		12	**013903**	73	30-1/2		28-1/2			
2-7/16	TPHU130	18	**013904**	86	36-1/2	4-1/2	34-1/2	-	3/4	13/16
2-1/2		24	**013905**	99	42-1/2		40-1/2			
		12	**013906**	80	32-1/2		30-1/2			
		18	**013907**	93	38-1/2		36-1/2			
2-11/16 2-3/4 2-15/16 3	TPHU140	24	**013908**	106	44-1/2	4-1/2	42-1/2	2	5/8	11/16
		30	**013909**	119	50-1/2		48-1/2			
		36	**013910**	132	56-1/2		54-1/2			
		12	**013511**	91	34-1/4		32			
		18	**013512**	105	40-1/4		38			
3-3/16 3-1/4 3-7/16 3-1/2	TPHU150	24	**013513**	119	46-1/4	4-1/2	44	2	3/4	13/16
		30	**013514**	133	52-1/4		50			
		36	**013515**	147	58-1/4		56			
		12	**013916**	132	38-1/2		36			
		18	**013917**	150	44-1/2		42			
3-11/16 3-15/16 4	TPHU160	24	**013918**	168	50-1/2	5-1/2	48	2-1/2	3/4	13/16
		30	**013519**	186	56-1/2		54			
		36	**013520**	204	62-1/2		60			

SELECTION/DIMENSIONS



Take-Up Frames - TPHU

Shaft Size	Frame Size	Nom. Travel	Part No.	H	J	M	R	S Screw Dia.	T Max. Travel	U
1-7/8 1-15/16 2	TPHU110	12 18 24	**013497** **013498** **013499**	1/2	10-5/8	3-15/16	6-5/16	3/4	13-1/2 19-1/2 25-1/2	7-3/4
2-3/16 2-1/4	TPHU120	12 18 24	**013900** **013901** **013902**	1/2	11-1/4	4-7/16	7-7/16	1	13-1/2 19-1/2 25-1/2	7
2-3/8 2-7/16 2-1/2	TPHU130	12 18 24	**013903** **013904** **013905**	1/2	11-3/4	4-5/8	7-61/64	1	13-1/2 19-1/2 25-1/2	7-1/2
2-11/16 2-3/4 2-15/16 3	TPHU140	12 18 24 30 36	**013906** **013907** **013908** **013909** **013910**	3/4	12-5/16	5-1/8	8-1/2	1	15-1/2 21-1/2 27-1/2 33-1/2 39-1/2	7-1/2
3-3/16 3-1/4 3-7/16 3-1/2	TPHU150	12 18 24 30 36	**013511** **013512** **013513** **013514** **013515**	3/4	13-27/32	5-5/8	9-23/32	1-1/4	15-1/2 21-1/2 27-1/2 33-1/2 39-1/2	8-1/4
3-11/16 3-15/16 4	TPHU160	12 18 24 30 36	**013916** **013917** **013918** **013519** **013520**	1	17	7	11-5/8	1-1/4	16-1/2 22-1/2 28-1/2 34-1/2 40-1/2	9-3/4

SPHERICAL ROLLER BEARINGS

S-2000

Shaft Size	Frame Size
1-15/16 2	TPHU-110
2-3/16	TPHU-120
2-7/16	TPHU-130
2-11/16 2-15/16 3	TPHU-140
3-7/16	TPHU-150
3-15/16	TPHU-160

- TPHU Take-Up Frames Are Not Supplied With Bearings. First Match The Take-Up Frame With The Bearing Size From This Page. Then Turn To The Page Listed For The Specific Bearing Part Number.
- S-2000- B12-9
- See B19-24 and B19-25 For TPHU Take-Up Frame Travel Options And Part Numbers.

SELECTION/DIMENSIONS



Take-Up Frames - CP

CENTER PULL (CP)

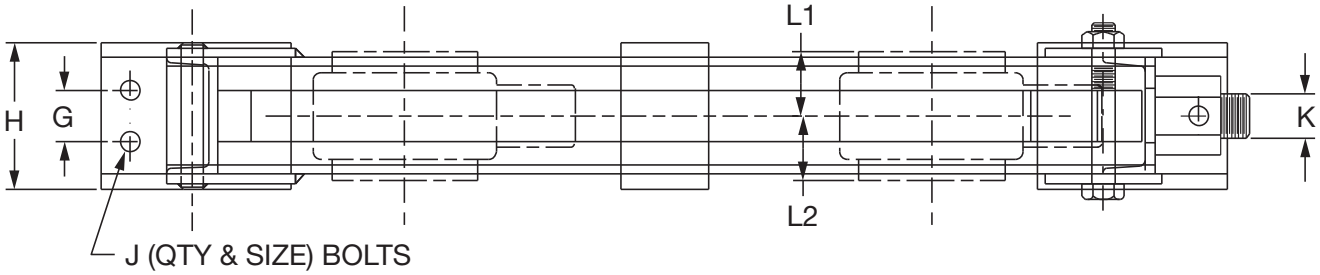

U.S. Patent No. 4,676,670

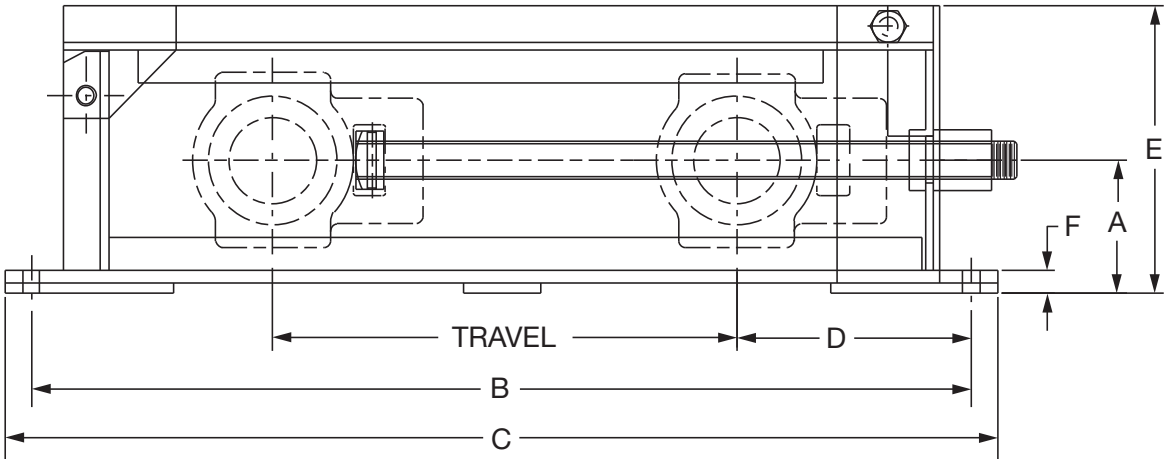



Take-Up Frames - CP

CENTER PULL (CP)

Frame Size	Travel	Frame Part Number	Frame Weight	Travel Maximum S2 & IP	Travel Maximum Type E & K	A	B	C	D S2000 Imperial	D Type K & E	E	F	G	H	J Qty.	J Size Dia.	K	L1 & L2
CP308	12	**019200**	30	15-15/32	15-15/32	3-7/16	26	28	6	6	7	11/16	..	3	2	1/2	3/4-10NC	See Page B19-23
CP308	18	**019201**	34	21-15/32	21-15/32		32	64									3/4-10NC	
CP308	24	**019202**	38	27-15/32	27-15/32		38	40									3/4-10NC	
CP308	30	**019203**	42	33-15/32	33-15/32		44	46									3/4-10NC	
CP308	36	**019204**	46	39-15/32	39-15/32		50	52									3/4-10NC	
CP400	12	**019210**	55	14-27/32	14-23/32	3-15/16	27-1/2	29-1/2	7-1/4	7-1/4	8-5/8	13/16	..	4	2	5/8	1-8NC	
CP400	18	**019211**	65	20-27/32	20-23/32		33-1/2	35-1/2									1-8NC	
CP400	24	**019212**	75	26-27/32	26-23/32		39-1/2	41-1/2									1-8NC	
CP400	30	**019213**	85	32-27/32	32-23/32		45-1/2	47-1/2									1-8NC	
CP400	36	**019214**	95	38-27/32	38-23/32		51-1/2	53-1/2									1-8NC	
CP408	12	**019220**	61	14-5/32	14-3/32	4-7/16	27-1/2	29-1/2	7-3/4	7-3/4	9-1/4	11/16	..	4	2	5/8	1-1/8-7NC	
CP408	18	**019221**	71	20-5/32	20-3/32		33-1/2	35-1/2									1-1/8-7NC	
CP408	24	**019222**	81	26-5/32	26-3/32		39-1/2	41-1/2									1-1/8-7NC	
CP408	30	**019223**	85	32-5/32	32-3/32		45-1/2	47-1/2									1-1/8-7NC	
CP408	36	**019224**	95	38-5/32	38-3/32		51-1/2	53-1/2									1-1/8-7NC	
CP502	12	**019230**	65	14-13/32	12-31/32	4-3/8	28-1/2	30-1/2	8-1/4	9-9/16	9-1/2	13/16	..	4	2	3/4	1-1/4-7NC	
CP502	18	**019231**	75	20-13/32	18-31/32		34-1/2	36-1/2									1-1/4-7NC	
CP502	24	**019232**	85	26-13/32	24-31/32		40-1/2	42-1/2									1-1/4-7NC	
CP502	30	**019233**	95	32-13/32	30-31/32		46-1/2	48-1/2									1-1/4-7NC	
CP502	36	**019234**	105	38-13/32	36-31/32		52-1/2	54-1/2									1-1/4-7NC	
CP515	12	**019240**	105	14-23/32	14-15/32	5-1/8	30-1/2	32-1/2	9-1/4	9-3/8	11-5/32	7/8	2	5	4	5/8	1-1/2-6NC	
CP515	18	**019241**	120	20-23/32	20-15/32		36-1/2	38-1/2									1-1/2-6NC	
CP515	24	**019242**	135	26-23/32	26-15/32		42-1/2	44-1/2									1-1/2-6NC	
CP515	30	**019243**	150	32-23/32	32-15/32		48-1/2	50-1/2									1-1/2-6NC	
CP515	36	**019244**	165	38-23/32	38-15/32		54-1/2	56-1/2									1-1/2-6NC	
CP613	12	**019250**	115	15-1/32	-	5-5/8	32	34-1/4	9-7/8	-	12-1/16	15/16	2	5	4	3/4	1-3/4-5NC	
CP613	18	**019251**	135	21-1/32	-		38	40-1/4									1-3/4-5NC	
CP613	24	**019252**	155	27-1/32	-		44	46-1/4									1-3/4-5NC	
CP613	30	**019253**	175	33-1/32	-		50	52-1/4									1-3/4-5NC	
CP613	36	**019254**	195	39-1/32	-		56	58-1/4									1-3/4-5NC	
CP810	12	**019260**	185	16-9/32	-	7	36	38-1/2	12	-	14-3/4	1-3/16	2-1/2	6	4	3/4	2-4-1/2-NC	
CP810	18	**019261**	210	22-9/32	-		42	44-1/2									2-4-1/2-NC	
CP810	24	**019262**	235	28-9/32	-		48	50-1/2									2-4-1/2-NC	
CP810	30	**019263**	260	34-9/32	-		54	56-1/2									2-4-1/2-NC	
CP810	36	**019264**	285	40-9/32	-		60	62-1/2									2-4-1/2-NC	
CP908	12	**019270**	280	17-31/32	-	7-1/2	40-3/4	45-3/4	13-1/2	-	16-1/16	1-1/4	5	9	4	1-1/8	2-4-1/2-NC	
CP908	18	**019271**	310	23-31/32	-		46-3/4	51-3/4									2-4-1/2-NC	
CP908	24	**019272**	340	29-31/32	-		52-3/4	57-3/4									2-4-1/2-NC	
CP908	30	**019273**	370	35-31/32	-		58-3/4	63-3/4									2-4-1/2-NC	
CP908	36	**019274**	400	41-31/32	-		64-3/4	69-3/4									2-4-1/2-NC	
CP1004	12	**019280**	370	18-29/32	-	8-1/8	44-1/2	49-1/2	15-3/8	-	17-5/16	1-1/2	5-1/2	10	4	1-1/8	2-1/4-4-1/2-NC	
CP1004	18	**019281**	400	24-29/32	-		50-1/2	55-1/2									2-1/4-4-1/2-NC	
CP1004	24	**019282**	430	30-29/32	-		56-1/2	61-1/2									2-1/4-4-1/2-NC	
CP1004	30	**019283**	460	36-29/32	-		62-1/2	67-1/2									2-1/4-4-1/2-NC	
CP1004	36	**019284**	490	42-29/32	-		68-1/2	73-1/2									2-1/4-4-1/2-NC	

Eccentric Collar Ball Bearing
Setscrew VSC Ball Bearing
Eccentric SXV Collar Ball Bearing
Take-Up Frames
Engineering
Part Number Index
Keyword Index

SELECTION/DIMENSIONS



Take-Up Frames - CP

CENTER PULL (CP)

Frame Size	Travel	Frame Part Number	Frame Weight	Travel Maximum		Imperial		S2000		Type K		Type E	
				S2 & IP	Type E & K	L1	L2	L1	L2	L1	L2	L1	L2
CP308	12	**019200**	30	15-15/32	15-15/32	57/64	1-47/64	53/64	1-45/64	1-1/32	1-1/2	1-1/2	1-1/2
CP308	18	**019201**	34	21-15/32	21-15/32								
CP308	24	**019202**	38	27-15/32	27-15/32								
CP308	30	**019203**	42	33-15/32	33-15/32								
CP308	36	**019204**	46	39-15/32	39-15/32								
CP400	12	**019210**	55	14-27/32	14-23/32	53/64	1-63/64	55/64	1-13/16	1-7/32	1-3/4	1-3/4	1-3/4
CP400	18	**019211**	65	20-27/32	20-23/32								
CP400	24	**019212**	75	26-27/32	26-23/32								
CP400	30	**019213**	85	32-27/32	32-23/32								
CP400	36	**019214**	95	38-27/32	38-23/32								
CP408	12	**019220**	61	14-5/32	14-3/32	59/64	2-7/64	29/32	1-63/64	1-9/32	1-7/8	1-7/8	1-7/8
CP408	18	**019221**	71	20-5/32	20-3/32								
CP408	24	**019222**	81	26-5/32	26-3/32								
CP408	30	**019223**	85	32-5/32	32-3/32								
CP408	36	**019224**	95	38-5/32	38-3/32								
CP502	12	**019230**	65	14-13/32	12-31/32	1-13/64	2-7/32	1-13/64	2	1-5/8	2	2	2
CP502	18	**019231**	75	20-13/32	18-31/32								
CP502	24	**019232**	85	26-13/32	24-31/32								
CP502	30	**019233**	95	32-13/32	30-31/32								
CP502	36	**019234**	105	38-13/32	36-31/32								
CP515	12	**019240**	105	14-23/32	14-15/32	1-7/32	2-9/32	1-3/16	2-13/32	1-5/8	2-1/4	2-1/4	2-1/4
CP515	18	**019241**	120	20-23/32	20-15/32								
CP515	24	**019242**	135	26-23/32	26-15/32								
CP515	30	**019243**	150	32-23/32	32-15/32								
CP515	36	**019244**	165	38-23/32	38-15/32								
CP613	12	**019250**	115	15-1/32	-	1-15/32	2-11/16	1-31/64	2-33/64	-	-	-	-
CP613	18	**019251**	135	21-1/32	-								
CP613	24	**019252**	155	27-1/32	-								
CP613	30	**019253**	175	33-1/32	-								
CP613	36	**019254**	195	39-1/32	-								
CP810	12	**019260**	185	16-9/32	-	1-21/32	3-3/64	1-39/64	2-55/64	-	-	-	-
CP810	18	**019261**	210	22-9/32	-								
CP810	24	**019262**	235	28-9/32	-								
CP810	30	**019263**	260	34-9/32	-								
CP810	36	**019264**	285	40-9/32	-								
CP908	12	**019270**	280	17-31/32	-			3-1/16	3-15/32	-	-	-	-
CP908	18	**019271**	310	23-31/32	-								
CP908	24	**019272**	340	29-31/32	-								
CP908	30	**019273**	370	35-31/32	-								
CP908	36	**019274**	400	41-31/32	-								
CP1004	12	**019280**	370	18-29/32	-			3-17/64	3-41/64	-	-	-	-
CP1004	18	**019281**	400	24-29/32	-								
CP1004	24	**019282**	430	30-29/32	-								
CP1004	30	**019283**	460	36-29/32	-								
CP1004	36	**019284**	490	42-29/32	-								

SELECTION/DIMENSIONS



Center Pull Take-Up Frame Bearings

TAPERED ROLLER BEARINGS

Type E

Shaft Size	Frame Size
1-3/8 1-7/16	CP-308
1-1/2 1-5/8 1-11/16	CP-400
1-3/4 1-7/8 1-15/16 2	CP-400
2-3/16	CP-408
2-1/4 2-7/16 2-1/2	CP-502
2-11/16 2-3/4 2-15/16 3	CP-515

- Center Pull Take-Up Frames Are Not Supplied With Bearings. First Match The Take-Up Frame With The Bearing Size From This Page. Then Turn To The Page Listed For The Specific Bearing Part Number
- Type E - B10-30
- Type K - B10-46
- See B19-27 and B19-28 For Center Pull Take-Up Frame Travel Options And Part Numbers

Type K

Shaft Size	Frame Size
1-7/16	CP-308
1-15/16	CP-400
2-3/16	CP-408
2-7/16 2-1/2	CP-502
2-15/16 3	CP-515

SPHERICAL ROLLER BEARINGS

S-2000

Shaft Size	Frame Size
1-3/8 1-7/16 1-1/2	CP-308
1-11/16 1-3/4	CP-400
1-15/16 2	CP-400
2-3/16	CP-408
2-7/16	CP-502
2-11/16 2-15/16 3	CP-515
3-7/16	CP-613
3-15/16	CP-810
4-7/16	CP-908
4-15/16	CP-1004

- Center Pull Take-Up Frames Are Not Supplied With Bearings. First Match The Take-Up Frame With The Bearing Size From This Page. Then Turn To The Page Listed For The Specific Bearing Part Number
- S-2000 - B12-36 to B12-39
- IMPERIAL - B14-18 to B14-22
- See B19-27 and B19-28 For Center Pull Take-Up Frame Travel Options And Part Numbers

IMPERIAL - IP

Shaft Size	Frame Size
1-1/8 1-3/16 1-1/4 1-3/8 1-7/16 1-1/2	CP308
1-5/8 1-11/16 1-3/4	CP-400
1-7/8 1-15/16 2	CP-400
2-3/16 2-1/4	CP-408
2-3/8 2-7/16 2-1/2	CP-502
2-11/16 2-3/4 2-15/16 3	CP-515
3-3/16 3-1/4 3-7/16 3-1/2	CP-613
3-11/16 3-15/16 4	CP-810

SELECTION/DIMENSIONS

Take-Up Frames - LD

LD PROTECTED SCREW TAKE-UP FRAMES

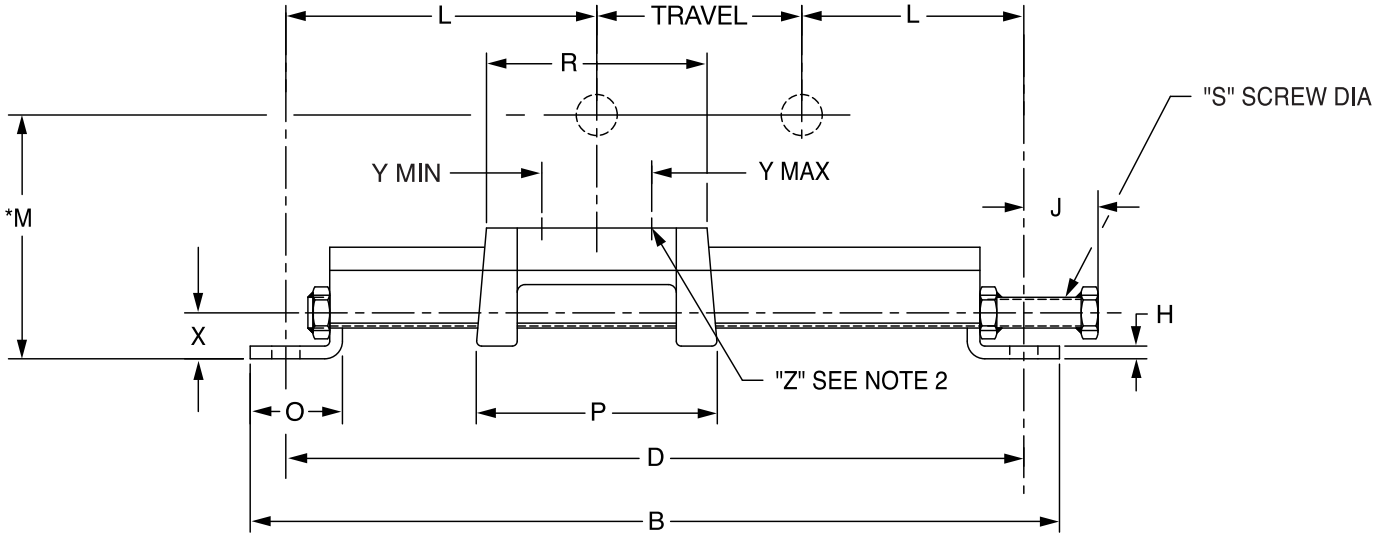

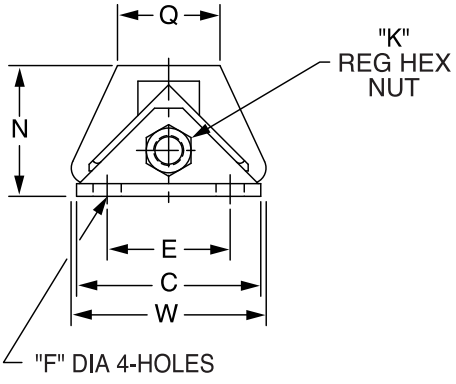

DODGE®



Take-Up Frames - LD

LD PROTECTED SCREW TAKE-UP FRAMES

Frame Size x Travel	Part No.	Wt.	B	C	D	E	F Bolt Dia.	H	J	K	L	N	O
LD-10x6	**039005**	10	19-1/2	3-3/4	18	2-1/2	3/8	1/4	9/16	9/16	6	2-3/4	2-1/8
LD-10x9	**039006**	11	22		20-1/2						5-3/4		
LD-10x12	**038910**	13	25		23-1/2						5-3/4		
LD-10x18	**038911**	14	31		29-1/2						5-3/4		
LD-10x30	**038912**	16	43		41-1/2						5-3/4		
LD-10x36	**038913**	18	49		47-1/2						5-3/4		
LD-10x42	**038914**	20	55		53-1/2						5-3/4		
LD-10x48	**038915**	22	61		59-1/2						5-3/4		
LD-20x6	**039007**	12	19-1/2	3-3/4	18	2-1/2	1/2	1/4	1-3/4	9/16	6	2-19/32	2-1/8
LD-20x9	**039008**	13	22		20-1/22						5-3/4		
LD-20x12	**039009**	14	25		23-1/2						5-3/4		
LD-20x18	**039010**	17	33-1/2		32						7		
LD-20x24	**039003**	18	39-1/2		38						7		
LD-20x30	**039002**	20	45-1/2		44						7		
LD-20x36	**039043**	22	51-1/2		50						7		
LD-20x42	**038916**	24	57-1/2		56						7		
LD-20x48	**039044**	26	63-1/2		62						7		
LD-30x12	**039011**	18	28-1/4	3-3/4	26-3/4	2-1/2	1/2	1/4	1-3/4	9/16	7-3/8	2-11/16	2-1/8
LD-30x18	**039012**	21	34-1/4		32-3/4						7-3/8		
LD-30x24	**039084**	24	40-1/4		38-3/4						7-3/8		
LD-30x30	**038917**	27	46-1/4		44-3/4						7-3/8		
LD-30x36	**038918**	30	52-1/4		50-3/4						7-3/8		
LD-30x42	**038919**	33	58-1/4		56-3/4						7-3/8		
LD-30x48	**038920**	35	64-1/4		62-3/4						7-3/8		
LD-40x12	**039013**	25	28-1/4	4-3/4	26-1/2	3	5/8	5/16	1-3/4	9/16	7-1/4	3-3/16	2-1/4
LD-40x18	**039014**	28	34-1/4		32-1/2						7-1/4		
LD-40x24	**039073**	31	40-1/4		38-1/2						7-1/4		
LD-40x30	**038921**	34	46-1/4		44-1/2						7-1/4		
LD-40x36	**038922**	37	52-1/4		50-1/2						7-1/4		
LD-40x42	**038923**	40	58-1/4		56-1/2						7-1/4		
LD-40x48	**038924**	43	64-1/4		62-1/2						7-1/4		
LD-45x12	**039018**	50	33	5	31-1/4	3	3/4	5/16	1-9/16	11/16	9-3/4	4-1/8	2-1/2
LD-45x18	**039019**	55	39-1/4		37-1/2						9-3/4		
LD-45x24	**039097**	58	45-1/4		43-1/2						9-3/4		
LD-45x30	**038925**	65	51-1/4		49-1/2						9-3/4		
LD-45x36	**038926**	70	57-1/4		55-1/2						9-3/4		
LD-45x42	**038927**	75	63-1/4		61-1/2						9-3/4		
LD-45x48	**038928**	80	69-1/4		67-1/2						9-3/4		
LD-50x6	**039004**	49	27	5	25-1/4	3	3/4	5/16	1-9/16	11/16	9-5/8	4-1/8	2-1/2
LD-50x12	**039015**	54	33		31-1/4						9-3/4		
LD-50x18	**039016**	60	39-1/4		37-1/2						9-3/4		
LD-50x24	**039017**	65	45-1/4		43-1/2						9-3/4		
LD-50x30	**038929**	71	51-1/4		49-1/2						9-3/4		
LD-50x36	**038930**	77	57-1/4		55-1/2						9-3/4		
LD-50x48	**038932**	90	69-1/4		67-1/2						9-3/4		

SELECTION/DIMENSIONS



Take-Up Frames - LD

LD PROTECTED SCREW TAKE-UP FRAMES

Frame Size x Travel	Part No.	Wt.	P	Q	R	S Screw Dia.	W	X	Y Bolt Centers		Z Bolt Dia.	Angle
									Max.	Min.		
LD-10x6	**039005**	10	5-7/8	1-1/2	5-3/8	3/4	3-1/4	15/16	4-3/8	2-7/8	3/8 x 1-1/2	2 x 2 x 1/4
LD-10x9	**039006**	11										
LD-10x12	**038910**	13										
LD-10x18	**038911**	14										
LD-10x30	**038912**	16										
LD-10x36	**038913**	18										
LD-10x42	**038914**	20										
LD-10x48	**038915**	22										
LD-20x6	**039007**	12	7-3/4	2-1/8	7-1/4	3/4	3-3/4	15/16	6-1/4	4-7/16	1/2 x 2-1/2	2 x 2 x 1/4
LD-20x9	**039008**	13										
LD-20x12	**039009**	14										
LD-20x18	**039010**	17										
LD-20x24	**039003**	18										
LD-20x30	**039002**	20										
LD-20x36	**039043**	22										
LD-20x42	**038916**	24										
LD-20x48	**039044**	26										
LD-30x12	**039011**	18	8-1/2	2-1/4	8	3/4	3-3/4	15/16	7	5-3/4	5/8 x 2-1/2	2 x 2 x 5/16
LD-30x18	**039012**	21										
LD-30x24	**039084**	24										
LD-30x30	**038917**	27										
LD-30x36	**038918**	30										
LD-30x42	**038919**	33										
LD-30x48	**038920**	35										
LD-40x12	**039013**	25	9-3/4	2-1/2	9-1/4	3/4	4-3/4	1-1/16	7-7/8	6-3/8	5/8 x 3	2-1/2 x 2-1/2 x 5/16
LD-40x18	**039014**	28										
LD-40x24	**039073**	31										
LD-40x30	**038921**	34										
LD-40x36	**038922**	37										
LD-40x42	**038923**	40										
LD-40x48	**038924**	43										
LD-45x12	**039018**	50	13-1/2	3-1/2	13	1	5-7/8	1-1/4	11-1/4	7-1/4	3/4 x 3-1/2	3 x 3 x 1/2
LD-45x18	**039019**	55										
LD-45x24	**039097**	58										
LD-45x30	**038925**	65										
LD-45x36	**038926**	70										
LD-45x42	**038927**	75										
LD-45x48	**038928**	80										
LD-50x6	**039004**	49	13-1/2	3-1/2	13	1	5-7/8	1-1/4	11-1/8	7-5/8	7/8 x 4	3 x 3 x 1/2
LD-50x12	**039015**	54										
LD-50x18	**039016**	60										
LD-50x24	**039017**	65										
LD-50x30	**038929**	71	13-1/2	3-1/2	13	1	5-7/8					
LD-50x36	**038930**	77										
LD-50x48	**038932**	90										



Light Duty Take-Up Frame Bearings

BALL BEARINGS

NORMAL DUTY

SETSCREW - SC, SCU, SCB, VSC, VSCB
D-LOK - DL, DLB
ECCENTRIC LOCK - SXR, SXRU, SXRB, SXV, SXVU, SXVB
GRIP TIGHT - GT

Series	Shaft Size	Frame Size
203	1/2 5/8	LD-10
204	1/2 5/8 3/4 20mm	LD-10
205	7/8 15/16 25mm	LD-10
206	1-1/16 1-1/8 1-3/16 1-1/4 30mm	LD-20
207	1-1/4 1-5/16 1-3/8 1-7/16 35mm	LD-20
208	1-1/2 1-5/8 40mm	LD-20
209	1-5/8 1-11/16 1-3/4 45mm	LD-20
210	1-15/16 2 50mm	LD-30
211	2 2-3/16 2-1/4 55mm	LD-40
212	2-1/4 2-7/16 60mm	LD-40
214	2-1/2 2-11/16 70mm	LD-45
215	2-15/16 75mm	LD-50

- Light Duty Take-Up Frames Are Not Supplied With Bearings. First Match The Take-Up Frame With The Bearing Size From This Page. Then Turn To The Page Listed For The Specific Bearing Part Number.

- EZ-KLEEN Polymer Housing - B1-14 to B1-29
- Grip Tight (GT & GTM)- B2-8 to B2-19
- Setscrew (SC, SCM & VSC) - B12-12 to B12-15
- Eccentric Lock (SXR & SXV) - B7-12 to B7-15
- D-LOK (DL & DLM) - B6-10 to B10-22

- See B19-32 For Light Duty Take-Up Frame Travel Options And Part Numbers.

MEDIUM DUTY

SETSCREW - SCM, SCH
D-LOK - DLM, DLH
GRIP TIGHT - GTM

Series	Shaft Size	Frame Size
206	1 25mm	LD-20
207	1-3/16 1-1/4 30mm	LD-20
208	1-7/16 35mm	LD-20
209	1-1/2 40mm	LD-20
210	1-11/16 1-3/4 45mm	LD-30
211	1-15/16 2 50mm	LD-40
212	2-3/16 2-1/4 55mm	LD-40
214	2-7/16 2-1/2 65mm	LD-45
215	2-11/16 70mm	LD-50
216	2-15/16 3 75mm	LD-50
218	3-7/16 3-1/2 85mm	LD-50

SELECTION/DIMENSIONS



Light Duty Take-Up Frame Bearings

SPHERICAL ROLLER BEARINGS

IMPERIAL - IP

Shaft Size	Frame Size
1-1/8 1-316 1-1/4 1-3/8 1-7/16 1-1/2	LD-20
1-5/8 1 11/16 1-3/4	LD-20
1-7/8 1 15/16 2	LD-30
2-3/16 2-1/4	LD-40
2-3/8 2-7/16 2-1/2	LD-40
2-11/16 2-3/4 2-15/16 3	LD-45
3-3/16 3-1/4 3-7/16 3-1/2	LD-50

S-2000

Shaft Size	Frame Size
1-3/8 1-7/16 1-1/2	LD-20
1-11/16 1-3/4	LD-20
1-15/16 2	LD-30
2-3/16	LD-40
2-7/16	LD-40
2-11/16 2-15/16 3	LD-45
3-7/16	LD-50

- Light Duty Take-Up Frames Are Not Supplied With Bearings. First Match The Take-Up Frame With The Bearing Size From This Page. Then Turn To The Page Listed For The Specific Bearing Part Number

- S-2000 - B12-14 to B12-17
- Unisphere II - B13-12 to B13-13
- IMPERIAL - B114-30 to B14-31

- See B19-32 For Light Duty Take-Up Frame Travel Options And Part Numbers.

UNISPHERE II

Shaft Size	Frame Size
1-7/16 1-1/2 1-11/16 1-3/4	LD-20
1-15/16 2	LD-30
2-3/16 2-7/16 2-1/2	LD-40
2-11/16 2-3/4 2-15/16 3	LD-45
3-7/16 3-1/2	LD-50

Frame Size	Max Recommended Housing Cap Load (90˚ Load Angle)
LD-10	2100
LD-20	3900
LD-30	6200
LD-40	6200
LD-45	9100
LD-50	12500

* Consult the Application Engineering Department for loads greater than listed. In all cases, when loads are heavy, the L10 life of the bearing should be checked for proper selection and life requirements.

* LD Frames are drilled for two bolt pillow blocks

SELECTION/DIMENSIONS



Light Duty Take-Up Frame Bearings

SLEEVE BEARING

LT-700
LT-1000

Series	Shaft Size	Frame Size
204	3/4	LD-10
205	7/8 15/16 1 25mm	LD-10
206	1-1/8 1-3/16 30mm	LD-20
207	1-1/4 1-3/8 1-7/16 35mm	LD-20
209	1-11/16 1-3/4 45mm	LD-20
210	1-15/16 2 50mm	LD-30
211	2-3/16 55mm	LD-40
212	2-7/16 2-1/2 55mm	LD-40
215	2-15/16 3	LD-50

- Light Duty Take-Up Frames Are Not Supplied With Bearings. First Match The Take-Up Frame With The Bearing Size From This Page. Then Turn To The Page Listed For The Specific Bearing Part Number

- LT-700 - B17-10 to B17-13
- LT-1000 - B17-10 to B17-13
- Babbitt Sleeve - B17-38 to B17-39
- See B19-32 For Light Duty Take-Up Frame Travel Options And Part Numbers

Babbitted Solid Journal Bearing

Shaft Size	Frame Size
1/2 to 1-1/4	LD-10
1-11/16 1-3/4	LD-20
2-15/16	LD-45

SELECTION/DIMENSIONS



Take-Up Frames - HD

HD PROTECTED SCREW TAKE-UP FRAMES

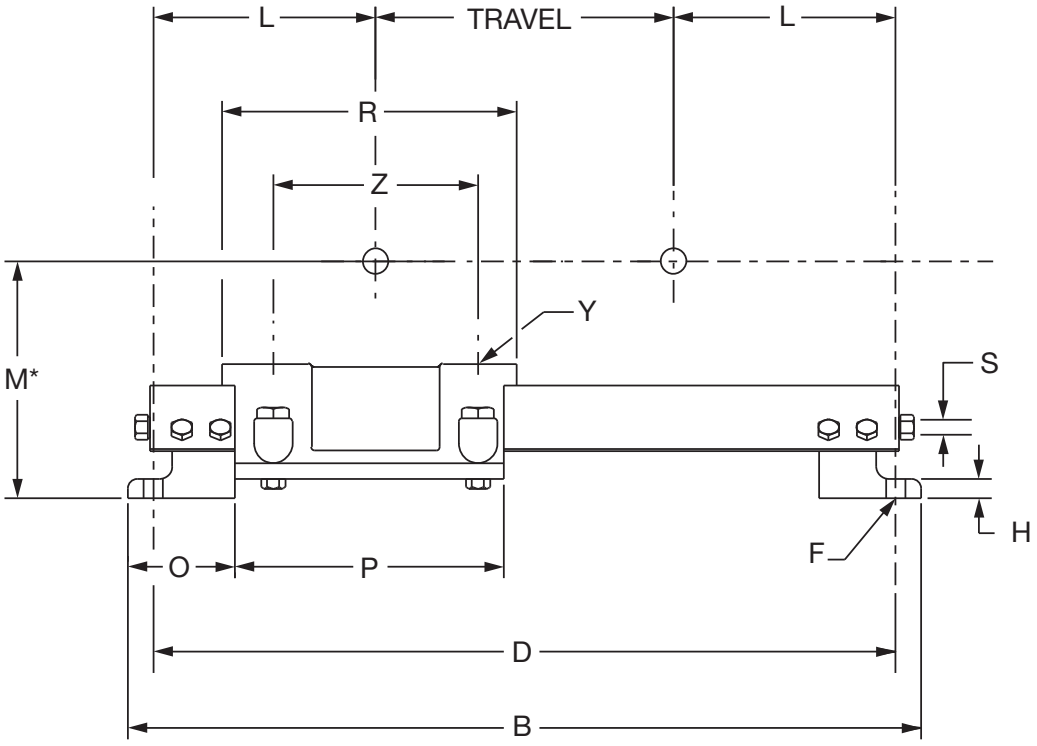

*M = N + Pillow Block Base to Center Dimemsion

The HD Protected Screw Take-Up Frames

HD 200 through HD 350 Take-Up frames will accommodate pillow blocks on saddles which are slotted for two-bolt Pillow Blocks and may be ordered by part numbers. When using four-bolt Pillow Blocks; or on HD frames 400 and larger, please supply:

1. Bore size of pillow block
2. Type of block (Type E, Double Interlock, USAF, etc.)
3. Whether pillow block is two-or four-bolt style
4. Frame Travel

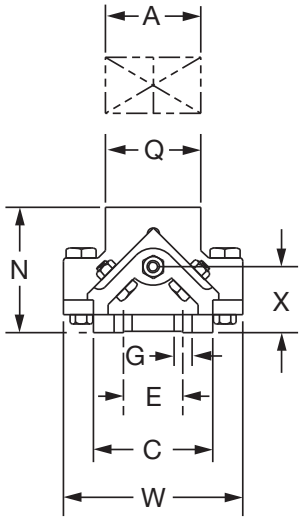

DODGE®



Take-Up Frames - HD

HD PROTECTED SCREW TAKE-UP FRAMES

Frame Size	Travel	Part No. **✦	Frame Wt.	B	C	D
HD-200*	12	**089020**	79	31	5	29
	18	**089021**	82	37	5	35
	24	**089022**	90	43	5	41
	30	**089023**	95	47	5	47
	36	**089024**	100	55	5	53
	48	**089150**	110	67	5	65
HD-250*	12	**089151**	115	35-1/4	6	32-3/4
	18	**089025**	125	41-1/4	6	38-3/4
	24	**089026**	135	47-1/4	6	44-3/4
	30	**089027**	137	53-1/4	6	50-3/4
	36	**089028**	143	59-1/4	6	56-3/4
	48	**089152**	153	71-1/4	6	68-3/4
	60	**089600**	163	83-1/4	6	80-3/4
HD-300*	12	**089153**	175	38-1/4	6-1/2	35-1/2
	18	**089029**	184	44-1/4	6-1/2	41-1/2
	24	**089030**	194	50-1/4	6-1/2	47-1/2
	30	**089031**	206	56-1/4	6-1/2	53-1/2
	36	**089032**	214	62-1/4	6-1/2	59-1/2
	48	**089033**	240	74-1/4	6-1/2	71-1/2
	60	**089601**	266	86-1/4	6-1/2	83-1/2
HD-350*	12	**089154**	195	40	6-1/2	37-1/4
	18	**089034**	204	46	6-1/2	43-1/4
	24	**089035**	212	52	6-1/2	49-1/4
	30	**089036**	220	58	6-1/2	55-1/4
	36	**089037**	234	64	6-1/2	61-1/4
	48	**089038**	250	76	6-1/2	73-1/4
	60	**089602**	276	88	6-1/2	85-1/4
HD-400**	12	**089155**	340	44	6-1/2	41-1/4
	18	**089039**	350	50	6-1/2	47-1/4
	24	**089040**	360	56	6-1/2	53-1/4
	30	**089041**	370	62	6-1/2	59-1/4
	36	**089042**	380	68	6-1/2	65-1/4
	48	**089043**	400	80	6-1/2	77-1/4
	60	**089603**	420	92	6-1/2	89-1/4
HD-500**	12	**089156**	420	49-1/2	7	47
	18	**089044**	440	55-1/2	7	53
	24	**089045**	460	61-1/2	7	59
	30	**089046**	480	67-1/2	7	65
	36	**089047**	500	73-1/2	7	71
	48	**089048**	530	85-1/2	7	83
	60	**089604**	560	97-1/2	7	95

Frame Size	E	F Bolt Dia.	G Dia.	H	L	N	O	P	Saddle *Dimensions Q	Saddle *Dimensions R	S Scr. Dia.	W	X	Y Bolt Dia.	Z Max.	Z Min.
HD-200	2-1/2	5/8	3/4	3/4	8-1/2	5-1/4	4	11	4	11	1	7-1/2	2-9/16	5/8	9-1/16	5-15/16
HD-250	3	5/8	3/4	3/4	10-3/8	6-1/4	5	13-1/4	4-1/2	13	1	8-1/4	3-1/4	3/4	10-7/8	7-5/8
HD-300	3	3/4	7/8	7/8	11-3/4	7	6	14-1/4	5	14	1-1/4	10	3-1/2	3/4	11-5/8	9-1/4
HD-350	3	3/4	7/8	7/8	12-5/8	7	6	16	6	17	1-1/4	10	3-1/2	7/8	13-11/16	10-3/4
HD-400	3	3/4	7/8	7/8	14-5/8	7	6	20	7-1/4	20	1-1/4	10	3-1/2	✦	✦	✦
HD-500	4	7/8	1	1	17-1/2	7-3/4	6-3/4	23-1/2	8-1/2	23-1/2	1-1/2	12-1/2	3-21/32	✦	✦	✦

Consult DODGE for HD600 and HD650 Take-Up Frames, for large bore bearings.

✦ Solid saddle must be drilled and tapped per order (HD-400 & HD500 frames)

* Saddle is slotted to receive 2-bolt blocks.

** For 4-bolt pillow blocks, all HD frames must be drilled and tapped per order. Refer to Page B19-36

FEATURES/BENEFITS PAGE B19-2 | HOW TO ORDER/NOMENCLATURE PAGE B19-7 | SELECTION/DIMENSIONS PAGE B19-8

SELECTION/DIMENSIONS



Take-Up Frames - HD

USING HD PROTECTED SCREW TAKE-UP FRAMES FOR BEARINGS OTHER THAN DODGE

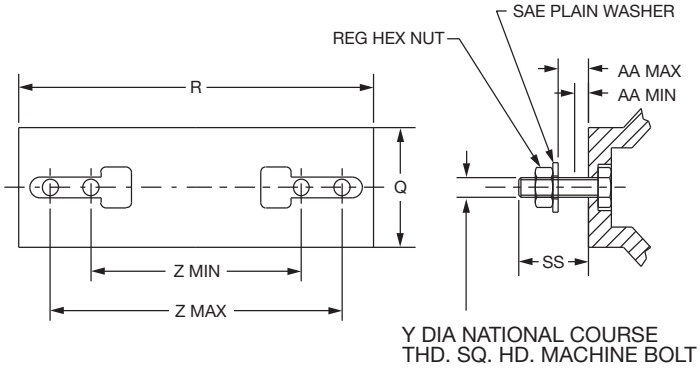



Slotted saddle type HD frames (200 through 350 sizes) may be used with 2-bolt pillow blocks other than DODGE pillow blocks listed in tables on previous pages. The dimensions shown below are listed to determine whether frame is applicable to this type of application.

Frame Size	AA		Saddle Dimensions	
	Min.	Max.	Q	R
HD-200	2	3-1/64	4	11
HD-250	2-5/8	3-13/16	4-1/2	13
HD-300	2-31/32	4-5/32	5	14
HD-350	2-27/32	4-11/16	6	17

Frame Size	Y			SS	Z Bolt Centers	
	Bearing Hold Down Bolts					
	Diameter	Part Number	Length Under Head		Max.	Min.
HD-200	5/8-11	**416173**	4	3-5/8	9-7/16	5-15/16
HD-250	3/4-10	**416229**	5	4-17/32	10-7/8	7-5/8
HD-300	3/4-10	**416231**	5-1/2	4-7/8	11-5/8	9-1/4
HD-350	7/8-9	**416275**	5-1/2	5	13-11/16	10-3/4

Note: The Pillow Blocks must use the bolt shown and have the capability of mounting between the Z bolt centers. The height off the mounting bolt pad must be within the AA dimensions.

SELECTION/DIMENSIONS



Heavy Duty Take-Up Frame Bearings

TAPERED ROLLER BEARINGS

Type E

Shaft Size	Frame Size
1-1/2 to 2-1/2	HD-200*
2-11/16 to 3	HD-250*
3-3/16 to 3-1/2	HD-350*
3-15/16 to 5	HD-400**
5-7/16 to 6	HD-500**

Type K Double Interlock

Shaft Size	Frame Size
1-1/2 to 2-3/16	HD-200*
2-1/4 to 2-1/2	HD-250*
2-11/16 to 3	HD-300*
3-3/16 to 3-1/2	HD-350*
3-15/16 to 4-1/2	HD-400**
4-15/16 to 5	HD-500**

TAF

Shaft Size	Frame Size
2-7/16 to 2-1/2	HD-200*
2-15/16 to 3	HD-250*
3-7/16 to 4	HD-350*
4-7/16 to 5	HD-400**
5-7/16	HD-500**

- Heavy Duty Take-Up Frames Are Not Supplied With Bearings. First Match The Take-Up Frame With The Bearing Size From This Page. Then Turn To The Page Listed For The Specific Bearing Part Number

- Type K - B10-40
- Type E - B10-22
- DOUBLE INTERLOCK - B10-50
- TAF - B10-58
- See B19-37 For Heavy Duty Take-Up Frame Travel Options and Part Numbers

* HD-200, HD-250, HD-300 and HD 350 Frames Are Drilled For Two Bolt Base Pillow Blocks. For 4-bolt pillow blocks, refer to note on page B19-36.

****HD-400 And Larger Are Drilled And Tapped Per Order. Specify Bearing Type When Ordering.**

Eccentric Collar Ball Bearing
Setscrew VSC Ball Bearing
Eccentric SXV Collar Ball Bearing
Take-Up Frames
Engineering
Part Number Index
Keyword Index

SELECTION/DIMENSIONS



Heavy Duty Take-Up Frame Bearings

SPECIALITY TAPERED ROLLER BEARINGS

Special Duty

Shaft Size	Frame Size
1-3/8 to 2	HD-200
2-1/8 to 2-1/2	HD-250
2-3/8 to 3	HD-300
3-3/16 to 3-1/2	HD-350
3-11/16 to 4	HD-400**
4-7/16 to 5	HD-500**

Type C

Shaft Size	Frame Size
1-3/8 to 1-15/16	HD-200
2 to 2-7/16	HD-250
2-3/8 to 2-15/16	HD-300
3 to 3-7/16	HD-350
3-1/2 to 4	HD-400**
4-7/16 to 5	HD-500**

All-Steel

Shaft Size	Frame Size
2-11/16 to 3	HD-250*
3-7/16 to 3-1/2	HD-300*
3-15/16 to 4	HD-350*
4-7/17 to 5	HD-400**

- Heavy Duty Take-Up Frames Are Not Supplied With Bearings. First Match The Take-Up Frame With The Bearing Size From This Page. Then Turn To The Page Listed For The Specific Bearing Part Number

- Specialty Duty - B11-30
- Type C - B11-8
- All Steel - B11-54
- See B19-37 For Heavy Duty Take-Up Frame Travel Options and Part Numbers

*HD-200, HD-250, HD-300 and HD 350 Frames Are Drilled For Two Bolt Base Pillow Blocks. For 4-bolt pillow blocks, refer to note on page B19-36.
****HD-400 And Larger Are Drilled And Tapped Per Order. Specify Bearing Type When Ordering.**

DODGE®



Heavy Duty Take-Up Frame Bearings

UNITIZED SPHERICAL ROLLER BEARINGS

Imperial - IP

Shaft Size	Frame Size
1-1/8 to 2-1/2	HD-200*
2-11/16 2-3/4 2-15/16 3	HD-250*
3-3/16 3-1/4 3-7/16 3-1/2	HD-300*
3-11/16 3-15/16 4 4-7/16 4-1/2	HD-350*
4-15/16 5	HD-400**

S-2000

Shaft Size	Frame Size
1-3/8 1-7/16 1-1/2 1-11/16 1-3/4 1-15/16 2 2-3/16 2-7/16 2-11/16	HD-200*
2-15/16 3	HD-250*
3-7/16	HD-300*
3-15/16 4-7/16	HD-350*
4-15/16	HD-400**

UNISPHERE II

Shaft Size	Frame Size
1-15/16 2 2-3/16 2-7/16 2-1/2	HD-200
2-11/16 2-3/4 2-15/16 3	HD-250
3-7/16 3-1/2	HD-300
3-15/16 4	HD-350

- Heavy Duty Take-Up Frames Are Not Supplied With Bearings. First Match The Take-Up Frame With The Bearing Size From This Page. Then Turn To The Page Listed For The Specific Bearing Part Number

- S-2000 - B12-14 to B12-29
- IMPERIAL - B14-30 to B14-37
- UNISPHERE - B13-12 to B13-13
- See B19-37 For Heavy Duty Take-Up Frame Travel Options and Part Numbers

*HD-200, HD-250, HD-300 and HD 350 Frames Are Drilled For Two Bolt Base Pillow Blocks. For 4-bolt pillow blocks, refer to note on page B19-36.
****HD-400 And Larger Are Drilled And Tapped Per Order. Specify Bearing Type When Ordering.**

SELECTION/DIMENSIONS



Heavy Duty Take-Up Frame Bearings

UNIFIED SPHERICAL ROLLER BEARINGS

USAF-500
SAF-XT
SAFS
ISAF

Shaft Size	Frame Size
1-15/16 to 2-3/16	HD-200*
2-7/16 to 3	HD-250*
3-3/16	HD-300*
3-7/16 to 3-1/2	HD-350*
3-15/16 to 4-1/2	HD-400**
4-15/16 to 5-1/2	HD-500**

Take-Up Frame Size	Maximum Recommended Housing Cap. Loads ** (at 90º load angle)
HD-200	2800
HD-250	4200
HD-300	4200
HD-350	3500
HD-400	***
HD-500	***

- Heavy Duty Take-Up Frames Are Not Supplied With Bearings. First Match The Take-Up Frame With The Bearing Size From This Page. Then Turn To The Page Listed For The Specific Bearing Part Number

- IMPERIAL - B14-52 to B14-57
- USAF-500 - B14-26 to B14-29
- SAF-XT - B15-56 to B15-59
- SAFS - B15-61 to B15-63
- See B19-37 For Heavy Duty Take-Up Frame Travel Options and Part Numbers

*HD-200, HD-250, HD-300 and HD 350 Frames Are Drilled For Two Bolt Base Pillow Blocks. For 4-bolt pillow blocks, refer to note on page B19-36.

****HD-400 And Larger Are Drilled And Tapped Per Order. Specify Bearing Type When Ordering.**

SELECTION/DIMENSIONS



Heavy Duty Take-Up Frame Bearings

SLEEVE BEARINGS

MM-700
MM-1000

Shaft Size	Frame Size
3-7/16 3-1/2	HD-250*
3-15/16 4	HD-300*
4-7/16 4-1/2	HD-350*
4-15/16 5	HD-400**

- Heavy Duty Take-Up Frames Are Not Supplied With Bearings. First Match The Take-Up Frame With The Bearing Size From This Page. Then Turn To The Page Listed For The Specific Bearing Part Number

- MM 700 - B17-14
- MM 1000 - B17-14
- Angle Babbitt - B17-42 to B17-43
- Bronze B17-50 to B17-53

- See B19-37 For Heavy Duty Take-Up Frame Travel Options and Part Numbers

Angle Babbitt
Bronze Babbitt

Shaft Size	Frame Size
1-15/16 2-3/16 2-7/16	HD-200*
2-11/16 2-15/16	HD-250*
3-7/16	HD-300*
3-15/16	HD-350*
4-7/16 4-15/16	HD-400**
5-7/16 5-15/16	HD-500**

*HD-200, HD-250, HD-300 and HD 350 Frames Are Drilled For Two Bolt Base Pillow Blocks. For 4-bolt pillow blocks, refer to note on page B19-36.

****HD-400 And Larger Are Drilled And Tapped Per Order. Specify Bearing Type When Ordering.**

SELECTION/DIMENSIONS

Take-Up Frames - BRONZOIL

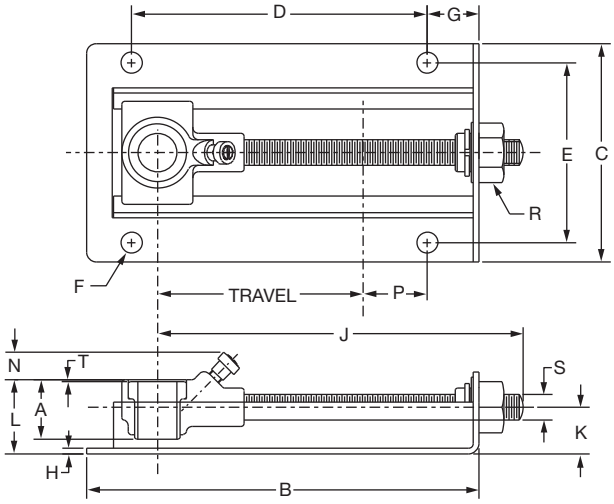

Shaft Size X Travel	Part Number	Description	Wt.	A	B	C	D	E
1/2 x 4	**034020**	BOTU-008X4	1.9	1-3/16	7-5/8	4-1/4	5-3/4	3-1/2
5/8 x 4	**034021**	BOTU-010X4	1.8					
3/4 x 4	**034022**	BOTU-012X4	1.7					
7/8 x 4	**034023**	BOTU-014X4	2.1	1-9/16	7-5/8	4-1/4	5-3/4	3-1/2
15/16 x 4	**034024**	BOTU-015X4	2.0					
1 x 4	**034025**	BOTU-100X4	1.9					

Shaft Size X Travel	F Bolt Dia.	G	H	J	K	L	N	P	R Hex. Size	S	T
1/2 x 4 5/8 x 4 3/4 x 4	3/8	1	7/64	7-1/8	29/32	1-7/16	1/2	1-1/4	1	1/2	1/16
7/8 x 4 15/16 x 4 1 x 4	3/8	1	7/64	7-1/8	29/32	1-5/8	5/16	1-1/4	1	1/2	1/16

BRONZOIL Take-Up Bearing Assembly					
Size	(TUBO---) Assy. No	1	2	3	4
1/2	**034030**	034001	405046	034013	444010
5/8	**034031**	034001	405046	034014	444010
3/4	**034032**	034001	405046	034015	444010
7/8	**034033**	034002	405046	034016	444010
15/18	**034034**	034002	405046	034017	444010
1	**034035**	034002	405046	034018	444010

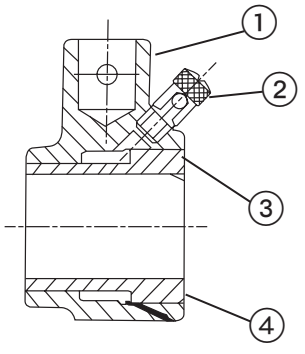

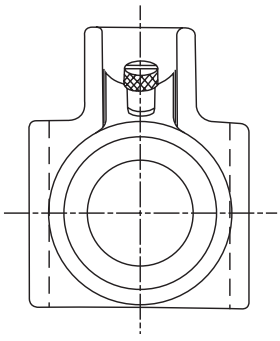

1. BRONZOIL Housing
2. BRONZOIL Take-Up Oil Cup
3. BRONZOIL Bushing
4. BRONZOIL Permawick



Take-Up Bearings - Type A & B





TYPE A & B TAKE-UP BEARINGS (Only) TYPE A & B TAKE-UP FRAMES DISCONTINUED

Shaft Size x Travel	Type A Take-Up Bearing		
	Part Number	Description	Wt.
15/16 x 5	**036180**	TUA-015-TUBRG	2.6
1 x 5	**036181**	TUA-100-TUBRG	2.5
1-3/15 x 5	**036182**	TUA-103-TUBRG	2.3
1-1/4 x 5	**036183**	TUA-104-TUBRG	2.2
1-7/16 x 6 1-7/16 x12	**036184**	TUA-107-TUBRG	3.5
1-11/16 x 6 1-11/16 x12	**036185**	TUA-111-TUBRG	4.1
1-15/16 x 9 1-15/16 x18	**036186**	TUA-115-TUBRG	6.7
2-3/16 x 9 2-3/16 x18	**036187**	TUA-203-TUBRG	10.1
2-7/16 x 9 2-7/16 x18	**036188**	TUA-207-TUBRG	8.8

Shaft Size x Travel	Type B Take-Up Bearing		
	Part Number	Description	Wt.
15/16 x 5	**036270**	TUB-015-TUBRG	3.6
1 x 5	**036193**	TUB-100-TUBRG	3.5
1-3/15 x 5	**036194**	TUB-103-TUBRG	3.3
1-1/4 x 5	**036274**	TUB-104-TUBRG	3.2
1-7/16 x 6 1-7/16 x 12	**036196**	TUB-107-TUBRG	4.7
1-11/16 x 6 1-11/16 x12	**036197**	TUB-111-TUBRG	5.4
1-15/16 x 9 1-15/16 x18	**036198**	TUB-115-TUBRG	8.6
2-3/16 x 9 2-3/16 x18	**036199**	TUB-203-TUBRG	12.7
2-7/16 x 9 2-7/16 x18	**036200**	TUB-207-TUBRG	11.4

SELECTION/DIMENSIONS

Take-Up Bearings - Type A & B

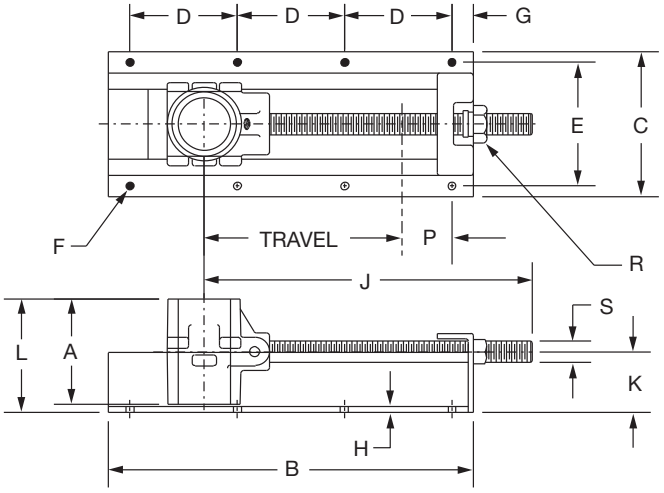

TYPE TUA

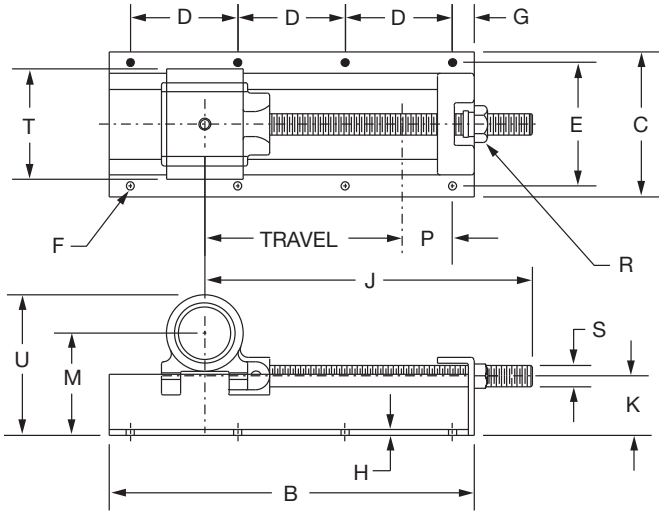

TYPE TUB

Shaft Size x Travel	A	B	C	D	E	F Bolt		G	H	J	K
						No.	Dia.				
15/16 x 5 1 x 5 1-3/16 x 5 1- 1/4 x 5	2-5/8	9-3/4	4-3/4	3-1/2	4	6	5/16	1-3/8	1/8	8-3/4	1-5/8
1-7/16 x 6 1-7/16 x 12	3-1/8	1218	5-3/45-3/4	55-1/4	4-3/44-3/4	68	3/33/8	11	3/163/16	10-1/216-1/2	22
1-11/16 x 6 1-11/16 x 12	3-3/8	1218	5-3/45-3/4	55-1/4	4-3/44-3/4	68	3/83/8	11	3/163/16	10-1/216-1/2	22
1-15/16 x 9 1-15/16 x 18	4-1/8	1726	6-3/46-3/4	56	5-3/45-3/4	810	3/83/8	11	1/41/4	14-1/223-1/2	2-3/42-3/4
2-3/16 x 9 2-3/16 x 18	4-7/8	1726	6-3/46-3/4	56	5-3/45-3/4	810	3/83/8	11	1/41/4	14-1/223-1/2	2-3/42-3/4
2-7/16 x 9 2-7/16 x 18	4-7/8	1726	6-3/46-3/4	56	5-3/45-3/4	810	3/83/8	11	1/41/4	14-1/223-1/2	2-3/42-3/4

Shaft Size x Travel	L	M	P	R Hex.	S	T	U	Grease Cup	
								Pipe Tap	Size
15/16 x 5 1 x 5 1-3/16 x 5 1- 1/4 x 5	3	2-3/4	1-5/8	1-5/16	3/4	2-7/8	3-27/32	1/8	0
1-7/16 x 6 1-7/16 x 12	3-5/8	3-3/83-3/8	2-1/22-1/2	1-1/2	7/8	3-3/8	4-19/32	1/4	0
1-11/16 x 6 1-11/16 x 12	3-3/4	3-5/83-5/8	2-1/22-1/2	1-1/2	7/8	3-5/8	4-31/32	1/4	0
1-15/16 x 9 1-15/16 x 18	4-7/8	4-1/24-1/2	3-3/83-3/8	1-5/8	1	4-3/8	6-1/32	1/4	1
2-3/16 x 9 2-3/16 x 18	5-1/4	4-3/44-3/4	3-1/83-1/8	1-5/8	1	5-1/8	6-17/32	1/4	1
2-7/16 x 9 2-7/16 x 18	5-1/4	4-3/44-3/4	3-3/83-3/8						

CONTENT

ENGINEERING/TECHNICAL

BEARING ENGINEERING SECTION

- Vibration Frequencies of Anti-Friction Mounted Bearings B20-2
- Bearing Life Adjustment Factors (Rolling Element Bearings) B20-8

PT COMPONENT ENGINEERING SECTION

- Conveyor Belt FPM to RPM B20-10
- V-Belt Sheave Groove Dimensions B20-11
- Material Characteristics B20-12

GENERAL ENGINEERING SECTION

- Shafting B20-14
- Expansion of Shafting B20-19
- Weights/Properties of Steel Shafting B20-20
- Oil Viscosity Classification B20-22
- English Standard Measurement B20-23
- Metric System of Measurement & Conversions B20-26
- Common Conversion Factors B20-28
- Formulas and Constants B20-34
- Centrifugal Force B20-35
- Flywheel Formulas B20-35
- Torque and Horsepower Equivalents B20-36
- Overhung Loads B20-36
- Mathematical Equations B20-36
- Strength and Physical Properties of Various Metals B20-37
- Properties of Sections B20-39
- Coefficients of Friction (f) B20-40
- Hardness Comparison B20-40
- U.S. Standard Sheet Metal Gages B20-40
- Trigonometric Formula B20-41

Part Number Index INDEX-1

Keyword Index INDEX-69

DODGE®

ENGINEERING

Vibration Frequencies of DODGE Anti-Friction Mounted Bearings

More and more manufacturing facilities are getting involved with plant-wide preventive maintenance programs. By monitoring vibration levels of motors, pumps, fans and compressors, maintenance supervisors can predict imminent failures. Knowing that a piece of equipment is showing signs of potential failure permits scheduling of maintenance at an appropriate time and avoids the consequences of catastrophic failures. Shown in Tables 1 - 10 are vibration frequencies generated by bearing components defects. All frequencies are based on unity inner ring or cone rotation.

How to Use the Tables

If a 2-7/16 Type E pillow block is rotating at 1000 RPM, the vibration due to a failed component will show up at the following frequencies: (Table 3, Line 6)

Frequency

Cup Nick or Spall	= 1000 x 9.251	= 9251 RPM
Cone Nick or Spall	= 1000 x 11.749	= 11749 PM
*Roller Nick or Spall	= 1000 x 4.011 x 2	= 8022 RPM
Cage (Train) Frequency (Inner Ring Rotation)	= 1000 x 0.441	= 441 RPM

Since all the values in Tables 1 - 10 are based on unity inner ring or cone rotation, the vibration due to flaws will show up at the frequencies obtained by multiplying the RPM times the factors found on the appropriate table. The resulting product will have units of RPM.

Table 1: All Setscrew, Eccentric, D-LOK & GT Ball Bearing Parameters For Vibration Analysis (1-RPS)

Series	SC Bore	SCM Bore	# Balls	Diameter of Balls	Pitch Diameter	Outer Ring Frequency Hz	Inner Ring Frequency Hz	* Ball Spin Frequency Hz	Cage Frequency Hz
203	1/2 - 5/8		8	17/64	1.151	3.078	4.923	2.050	0.385
204	1/2 - 3/4		8	5/16	1.325	3.057	4.943	2.002	0.382
205	7/8 - 1		9	5/16	1.533	3.582	5.418	2.350	0.398
206	1-1/6 - 1-1/4	1	9	3/8	1.823	3.575	5.426	2.328	0.397
207	1-1/4 - 1-7/16	1-3/16	9	7/16	2.136	3.579	5.422	2.339	0.398
208	1-1/2 - 1-5/8	1-7/16 - 1-1/2	9	1/2	2.387	3.558	5.443	2.283	0.395
209	1-11/16 - 1-3/4	1-1/2	9	13/25	2.559	3.586	5.414	2.360	0.398
210	1-15/16 - 2	1-11/16 - 1-3/4	10	1/2	2.765	4.056	5.904	2.674	0.410
211	2-2-1/4	1-15/16 - 2	10	9/16	3.092	4.090	5.910	2.657	0.410
212	2-1/4 - 2-7/16	2-3/16 - 2-1/4	10	5/8	3.385	4.077	5.923	2.616	0.408
214	2-11/16	2-7/16 - 2-1/2	10	11/16	3.775	4.089	5.911	2.654	0.409
215	2-15/16	2-11/16	11	11/16	4.085	4.574	6.456	2.887	0.416
216		2-15/16 - 3	11	3/4	4.330	4.547	6.453	2.800	0.413
218		3-7/16 - 3-1/2	11	27/32	4.920	4.557	6.443	2.830	0.414

Table 2: Type E, K, DI, and TAF Tapered Roller Bearing Parameters For Vibration Analysis (1-RPS)

Bore Size	# Rollers Per Row	Mean Diameter of Rollers	Pitch Diameter	Contact Angle	Cup Frequency Hz	Cone Frequency Hz	* Roller Spin Frequency Hz	Cage Frequency Hz
1-3/16 - 1-1/4	19	0.23	1.774	17.533	8.326	10.675	3.798	0.438
1-3/8 - 1-7/16	20	0.29	2.084	16.500	8.666	11.334	3.529	0.433
1-1/2 - 1-11/16	18	0.35	2.411	16.000	7.744	10.256	3.377	0.430
1-3/4 - 2	17	0.41	2.709	12.033	7.241	9.758	3.231	0.426
2-3/16	19	0.41	3.014	13.283	8.242	10.758	3.611	0.434
2-1/4 - 2-1/2	21	0.41	3.337	14.500	9.251	11.749	4.012	0.441
2-11/16 - 3	24	0.41	3.900	16.733	10.792	13.208	4.708	0.450
3-3/16 - 3-1/2	26	0.46	4.780	18.167	11.811	14.189	5.152	0.454
3-15/16 - 4	26	0.51	5.120	17.567	11.766	14.235	4.974	0.453
4-7/16 - 4-1/2	25	0.59	5.727	18.983	11.282	13.718	4.807	0.451
4-15/16 - 5	25	0.68	6.568	17.000	11.262	13.738	4.782	0.455
5-7/16 - 6	32	0.67	8.444	17.750	14.791	17.209	6.266	0.462
6-7/16 - 7	27	0.93	9.791	19.167	12.289	14.711	5.222	0.455

Cup Frequency = N * RPM * (1 - (Bd * cos a / Pd)) / 120

Cone Frequency = N * RPM * (1 + (Bd * cos a / Pd)) / 120

Roller Spin Frequency = Pd * RPM * (1 - (Bd * cos a / Pd) ^2) / (120 * Bd)

Cage Frequency = RPM * (1 - (Bd * cos a / Pd)) /120

Pd = Pitch Diameter

N = Number of rollers

Bd = Roller Diameter

a = Cup Angle (contact angle)

Table 3: Type C Tapered Roller Bearing Parameters For Vibration Analysis (1-RPS)

Bore Size	# Rollers Per Row	Mean Diameter of Rollers	Pitch Diameter	Contact Angle	Cup Frequency Hz	Cone Frequency Hz	* Roller Spin Frequency Hz	Cage Frequency Hz
1-3/16 - 1-7/16	19	0.31	2.251	14.92	8.236	10.764	3.566	0.433
1-1/2 - 1-3/4	21	0.32	2.604	11.50	9.236	11.764	4.010	0.440
1-15/16	22	0.33	2.848	15.00	9.769	12.231	4.261	0.444
2 - 2-1/4	21	0.40	3.335	16.83	9.295	11.705	4.114	0.443
2-3/16 - 2-7/16	25	0.35	3.533	18.00	11.322	13.678	5.002	0.453
2-1/2 - 2-11/16	23	0.43	3.827	16.50	10.261	12.739	4.399	0.446
2-7/16 - 2-15/16	26	0.42	4.220	16.50	11.759	14.241	4.978	0.452
3 - 3-3/16	22	0.55	4.612	16.50	9.742	12.258	4.138	0.443
3-1/4 - 3-7/16	24	0.51	4.761	16.42	10.767	13.233	4.618	0.449
3-1/2 - 4	25	0.59	5.727	18.98	11.282	13.718	4.807	0.4513
4-7/16 - 4-1/2	33	0.46	3.109	11.50	14.108	18.892	3.308	0.428
4-15/16 - 5	26	0.68	6.983	18.00	11.796	14.204	5.091	0.4537

Cup Frequency = N * RPM * (1 - (Bd * cos a / Pd)) / 120

Cone Frequency = N * RPM * (1 + (Bd * cos a / Pd)) / 120

Roller Spin Frequency = Pd * RPM * (1 - (Bd * cos a / Pd) ^2) / (120 * Bd)

Cage Frequency = RPM * (1 - (Bd * cos a / Pd)) /120

Pd = Pitch Diameter

N = Number of rollers

Bd = Roller Diameter

a = Cup Angle (contact angle)

*** Note:** Ball and Roller Spin Frequencies are listed at one (1X) roller spin frequency. For thorough analysis it is important to check frequency level at two (2X) rotational speed of balls or rollers as this is the frequency that a single ball/roller defect will contact the raceways of the bearing. In other words, a ball/roller defect will strike both inner and outer ring in one revolution of the roller.

ENGINEERING

Type 4: Special Duty Tapered Roller Bearing Parameters For Vibration Analysis (1-RPS)

Bore Size	# Rollers Per Row	Mean Diameter of Rollers	Pitch Diameter	Contact Angle	Cup Frequency Hz	Cone Frequency Hz	Roller Spin Frequency Hz	Cage Frequency Hz
1-3/8 - 1-1/2	21	0.32	2.603	11.50	9.2384	11.7616	4.0188	0.4399
1-9/16 - 1-3/4	26	0.32	3.061	16.00	11.6930	14.3070	4.7323	0.4497
1-7/8 - 2	27	0.32	3.267	17.00	12.2349	14.7651	5.0578	0.4531
2-1/8 - 2-1/4	25	0.35	3.533	18.00	11.3174	13.6826	4.9813	0.4527
2-3/8 - 2-1/2	29	0.35	3.828	18.77	13.2454	15.7546	5.4304	0.4567
2-5/8 - 3	26	0.48	4.572	10.17	11.6498	14.3502	4.6873	0.4481
3-3/16 - 3-1/2	27	0.56	5.541	16.00	12.1840	14.8160	4.8838	0.4513
3-11/16 - 4	23	0.68	6.103	15.88	10.2627	12.7373	4.4180	0.4462
4-7/16 - 4-1/2	26	0.68	6.983	18.00	11.7910	14.2090	5.0689	0.4535
4-15/16 - 5	30	0.75	7.896	17.00	13.6369	16.3631	5.2181	0.4546
5-7/16 - 6	24	0.93	9.123	17.33	10.8322	13.1678	4.8584	0.4513
6-1/2 - 7	29	0.93	10.190	19.23	13.2505	15.7495	5.4378	0.4569
7-15/16 - 8	27	1.12	11.471	12.42	12.2127	14.7873	5.0744	0.4523
8-1/2 - 10	41	0.87	13.979	16.40	19.2761	21.7239	8.0053	0.4701
11 - 12	37	1.20	16.061	12.50	17.1505	19.8495	6.6565	0.4635

Cup Frequency = N * RPM * (1 - (Bd * cos a / Pd)) / 2
Cone Frequency = N * RPM * (1 + (Bd * cos a / Pd)) / 2
Roller Spin Frequency = Pd * RPM * (1 - (Bd * cos a / Pd) ^2) / (2 * Bd)
Cage Frequency = RPM * (1 - (Bd * cos a / Pd)) / 2

Pd = Pitch Diameter
N = Number of rollers
Bd = Roller Diameter
a = Cup Angle (contact angle)

Table 5: All Steel Tapered Roller Bearing Parameters For Vibration Analysis (1-RPS

Bore Size	# Rollers Per Row	Mean Diameter of Rollers	Pitch Diameter	Contact Angle	Cup Frequency Hz	Cone Frequency Hz	* Roller Spin Frequency Hz	Cage Frequency Hz
2-11/16 - 3	27	0.36	4.114	15.50	12.362	14.638	5.673	0.458
3-1/4 - 3-1/2	26	0.51	5.120	17.57	11.766	14.235	4.974	0.453
3-15/16 - 4	33	0.48	5.814	12.50	15.170	17.830	6.017	0.460
4-7/16 - 4-1/2	29	0.60	6.503	12.92	13.196	15.804	5.375	0.455
4-15/16 - 5	32	0.61	7.355	12.50	14.705	17.296	5.989	0.460
5-7/16	27	0.84	8.272	12.00	12.159	14.841	4.875	0.450
5-15/16 - 6	26	0.85	8.323	12.00	11.701	14.300	4.847	0.450
6-7/16 - 7	32	0.81	9.748	12.50	14.702	17.300	5.978	0.459
7-1/2 - 8	27	1.12	11.471	12.42	12.213	14.787	5.074	0.452
9 - 10	32	1.28	14.026	12.03	14.572	17.428	5.435	0.455

Cup Frequency = N * RPM * (1 - (Bd * cos a / Pd)) / 120
Cone Frequency = N * RPM * (1 + (Bd * cos a / Pd)) / 120
Roller Spin Frequency = Pd * RPM * (1 - (Bd * cos a / Pd) ^2) / (120 * Bd)
Cage Frequency = RPM * (1 - (Bd * cos a / Pd)) / 120

Pd = Pitch Diameter
N = Number of rollers
Bd = Roller Diameter
a = Cup Angle (contact angle)

*** Note:** Ball and Roller Spin Frequencies are listed at one (1X) roller spin frequency. For thorough analysis it is important to check frequency level at two (2X) rotational speed of balls or rollers as this is the frequency that a single ball/roller defect will contact the raceways of the bearing. In other words, a ball/roller defect will strike both inner and outer ring in one revolution of the roller.

Table 6: S-2000, UNISPHERE II and Imperial Spherical Roller Bearing Parameters for Vibration Analysis (1-RPS)

Basic Bearing Series	S-2000 Bore Size (in)	UNISPHERE II Bore Size (in)	Imperial Bore Size (in)	No. of Rollers	Mean Dia. Of Rollers	Pitch Dia.	Contact Angle	Outer Ring Frequency Hz	Inner Ring Frequency Hz	* Roller Spin Frequency Hz	Cage Frequency Hz
22208	1-3/8 - 1-1/2	1-7/16 - 1-1/2	1-1/8 - 1-1/2	15	0.449	2.449	10.583	6.149	8.851	2.640	0.410
22209	1-11/16 - 1-3/4	1-11/16 - 1-3/4	1-5/8 - 1-3/4	17	0.429	2.665	9.750	7.151	9.849	3.027	0.421
22210	1-15/16 - 2	1-15/16 - 2	1-7/8 - 2	18	0.433	2.858	9.083	7.653	10.347	3.226	0.425
22211	2-3/16	2-3/16	2-3/16 - 2-1/4	19	0.465	3.189	8.750	8.132	10.868	3.361	0.428
22213	2-7/16	2-7/16 - 2-1/2	2-3/8 - 2-1/2	18	0.583	3.795	9.083	7.635	10.365	3.182	0.424
22215	2-11/16 - 3	2-11/16 - 3	2-11/16 - 3	20	0.575	4.197	8.250	8.645	11.355	3.584	0.432
22218	3-7/16	3-7/16 - 3-1/2	3-3/16 - 3-1/2	18	0.780	5.079	8.833	7.635	10.365	3.183	0.424
22220	3-15/16 - 4	3-15/16 - 4	3-11/16 - 4	18	0.878	5.705	9.000	7.632	10.368	3.174	0.424
22222	4-7/16		4-7/16 - 4-1/2	17	1.020	6.287	9.417	7.140	9.860	3.004	0.420
22226	4-15/16		4-15/16 - 5	18	1.118	7.307	9.750	7.643	10.357	3.193	0.425
22228			5-7/16 - 5-1/2	18	1.217	7.933	9.583	7.639	10.361	3.186	0.424
22232			5-15/16 - 6	18	1.409	9.189	9.667	7.639	10.361	3.185	0.424
22236			6-7/16 - 7	18	1.559	10.157	9.417	7.637	10.363	3.183	0.424

Table 7: USAF and SAF-XT Spherical Roller Bearing Parameters for Vibration Analysis (1-RPS)

Basic Bearing Series	USAF/SAF-XT Bore Sizes (in)	No. Of Rollers	Mean Dia. Of Rollers	Pitch Dia.	Contact Angle	Outer Ring Frequency Hz	Inner Ring Frequency Hz	* Roller Spin Frequency Hz	Cage Frequency Hz
22209	1-7/16	18	0.408	2.626	9.633	7.623	10.377	3.147	0.424
22210	1-11/16	19	0.415	2.819	8.917	8.120	10.880	3.328	0.427
22211	1-15/16	19	0.465	3.097	8.833	8.092	10.908	3.260	0.426
22213	2-3/16	20	0.534	3.761	9.117	8.599	11.401	3.456	0.430
22215	2-7/16 - 2-1/2	20	0.587	4.093	8.433	8.582	11.418	3.419	0.429
22216	2-11/16 - 2-3/4	20	0.622	4.410	8.333	8.604	11.396	3.475	0.430
22217	2-15/16 - 3	20	0.679	4.723	8.367	8.578	11.422	3.409	0.429
22218	3-3/16	20	0.702	5.024	8.917	8.620	11.380	3.510	0.431
22220	3-7/16 - 3-1/2	19	0.823	5.609	8.917	8.123	10.877	3.336	0.428
22222	3-15/16 - 4	18	0.979	6.185	9.583	7.595	10.405	3.082	0.422
22224	4-3/16	19	0.999	6.700	9.633	8.103	10.897	3.280	0.426
22226	4-7/16 - 4-1/2	19	1.071	7.205	9.950	8.109	10.891	3.292	0.427
22228	4-15/16 - 5	18	1.217	7.933	9.583	7.639	10.361	3.186	0.424
22230	5-3/16	18	1.315	8.559	9.500	7.636	10.364	3.180	0.424
22232	5-7/16 - 5-1/2	18	1.409	9.189	9.667	7.639	10.361	3.185	0.424
22234	5-15/16 - 6	17	1.583	9.740	9.833	7.139	9.861	2.998	0.420
22236	6-7/16 - 6-1/2	18	1.559	10.157	9.417	7.637	10.363	3.183	0.424
22238	6-15/16 - 7	20	1.496	10.669	10.667	8.622	11.378	3.498	0.431
22240	7-3/16	19	1.614	11.021	10.833	8.133	10.867	3.343	0.428
22244	7-1/2 - 8	19	1.850	12.480	10.833	8.117	10.883	3.301	0.427
23048	8-7/16 - 9	29	1.142	12.008	9.333	13.140	15.860	5.213	0.453
23052	9-7/16 - 9-1/2	27	1.378	13.228	9.667	12.114	14.886	4.749	0.449
23056	9-15/16 - 10-1/2	28	1.378	13.976	9.333	12.638	15.362	5.023	0.451

*** Note:** Ball and Roller Spin Frequencies are listed at one (1X) roller spin frequency. For thorough analysis it is important to check frequency level at two (2X) rotational speed of balls or rollers as this is the frequency that a single ball/roller defect will contact the raceways of the bearing. In other words, a ball/roller defect will strike both inner and outer ring in one revolution of the roller.

ENGINEERING

Table 8: DODGE USAF Air Handling Spherical Roller Bearing Parameters For Vibration Analysis (1-RPS)

Bore Size	Basic Bearing Series	# Rollers Per Row	Diameter of Rollers	Pitch Diameter	Contact Angle	Outer Ring Frequency Hz	Inner Ring Frequency Hz	*Roller Spin Frequency Hz	Cage Frequency Hz
1-7/16	22209E1K	17	0.3937	2.5976	10.0000	7.231	9.769	3.226	0.425
1-11/16	22210E1K	19	0.3937	2.7976	9.2500	8.180	10.820	3.484	0.431
1-15/16	22211E1K	18	0.4528	3.0921	8.9200	7.698	10.302	3.343	0.428
2-3/16	22213E1K	19	0.5315	3.7110	9.2500	8.157	10.843	3.421	0.429
2-7/16 - 2-1/2	22215E1K	21	0.5315	4.1098	8.3300	9.156	11.846	3.803	0.436
2-11/16 - 2-3/4	22216E1K	20	0.5709	4.3638	8.2500	8.705	11.295	3.758	0.435
2-15/16 - 3	22217E1K	20	0.6299	4.6811	8.5000	8.669	11.331	3.650	0.434
3-3/16	22218E1K	20	0.6693	4.9602	8.8300	8.667	11.333	3.640	0.433
3-7/16 - 3-1/2	22220E1K	19	0.7677	5.5606	9.0000	8.205	10.795	3.554	0.432
3-15/16 - 4	22222E1K	19	0.8661	6.1559	9.4200	8.181	10.819	3.485	0.431
4-3/16	22224E1K	19	0.9252	6.6382	9.5800	8.194	10.806	3.520	0.431
4-7/16 - 4-1/2	22226E1K	19	0.9843	7.1358	9.9200	8.209	10.791	3.558	0.432
4-15/16 - 5	22228E1K	19	1.0630	7.7232	9.6700	8.211	10.789	3.566	0.432

Outer Ring Frequency = N * RPM * (1 - (Bd * cos a / Pd)) / 120
Inner Ring Frequency = N * RPM * (1 + (Bd * cos a / Pd)) / 120
Roller Spin Frequency = Pd * RPM * (1 - (Bd * cos a / Pd) ^2) / (120 * Bd)
Cage Frequency = RPM * (1 - (Bd * cos a / Pd)) / 120

Pd = Pitch Diameter
N = Number of rollers
Bd = Roller Diameter
a = Contact Angle

Table 9: Split-Spherical Roller Bearing Parameters For Vibration Analysis

Bore Size	Basic Bearing Series	# Rollers Per Row	Diameter Of Rollers	Pitch Diameter	Contact Angle	Outer Ring Frequency Hz	Inner Ring Frequency Hz	*Roller Spin Frequency Hz	Cage Frequency Hz
2-3/16	22213SS	17	0.559	3.414	9.000	7.125	9.875	2.973	0.419
2-7/16	22215SS	18	0.551	3.748	9.083	7.693	10.307	3.328	0.427
2-11/16	22216SS	19	0.579	3.950	8.667	8.124	10.876	3.341	0.428
2-15/16	22217SS	20	0.575	4.153	8.250	8.630	11.370	3.545	0.431
3-3/16	22218SS	19	0.654	4.435	8.167	8.114	10.886	3.321	0.427
3-7/16	22220SS	18	0.780	5.079	8.833	7.635	10.365	3.183	0.424
3-15/16 - 4	22222SS	18	0.878	5.634	9.000	7.615	10.385	3.132	0.423
4-3/16	22224SS	17	1.110	6.203	9.417	7.000	10.000	2.708	0.412
4-7/16 - 4-1/2	22226SS	18	1.047	6.727	9.417	7.618	10.382	3.136	0.423
4-15/16	22228SS	18	1.118	7.202	9.750	7.623	10.377	3.145	0.424
5-3/16	22230SS	18	1.217	7.822	9.583	7.620	10.380	3.139	0.423
5-7/16	22232SS	18	1.315	8.442	9.500	7.617	10.383	3.134	0.423
5-15/16 - 6	22234SS	18	1.409	9.059	9.667	7.620	10.380	3.138	0.423
6-7/16 - 6-1/2	22236SS	18	1.409	9.059	9.667	7.620	10.380	3.138	0.423
6-15/16 - 7	22238SS	18	1.559	10.021	9.417	7.619	10.381	3.138	0.423
7-3/16	22240SS	16	1.579	10.716	9.417	6.837	9.163	3.322	0.427
7-1/2 - 8	22244SS	16	1.752	11.257	9.500	6.772	9.228	3.137	0.423
8-1/2 - 9	23048SS	20	1.307	11.189	8.083	8.843	11.157	4.223	0.442
9-1/2	23052SS	22	1.339	11.949	8.417	9.781	12.219	4.408	0.445
10	23056SS	20	1.539	13.175	8.667	8.845	11.155	4.222	0.442

Outer Ring Frequency = N * RPM * (1 - (Bd * cos a / Pd)) / 12
Olnner Ring Frequency = N * RPM * (1 + (Bd * cos a / Pd)) / 120
Roller Spin Frequency = Pd * RPM * (1 - (Bd * cos a / Pd) ^2) / (120 * Bd)
Cage Frequency = RPM * (1 - (Bd * cos a / Pd)) / 120

Pd = Pitch Diameter
N = Number of rollers
Bd = Roller Diameter
a = Contact Angle

*** Note:** Ball and Roller Spin Frequencies are listed at one (1X) roller spin frequency. For thorough analysis it is important to check frequency level at two (2X) rotational speed of balls or rollers as this is the frequency that a single ball/roller defect will contact the raceways of the bearing. In other words, a ball/roller defect will strike both inner and outer ring in one revolution of the roller.

Table 10: USDAF Spherical Roller Bearing Parameters For Vibration Analysis (1-RPS)

Bore Size	Basic Bearing Series	# Rollers Per Row	Diameter of Rollers	Pitch Diameter	Contact Angle	Outer Ring Frequency Hz	Inner Ring Frequency Hz	* Roller Spin Frequency Hz	Cage Frequency Hz
10-15/16 - 11	23060K	27	1.575	15.066	9.500	12.108	14.892	4.732	0.448
11-7/16 - 12	23064K	28	1.575	15.850	9.333	12.627	15.373	4.983	0.451
12-7/16 - 12-1/2	23068K	27	1.732	17.007	9.500	12.144	14.856	4.860	0.450
12-15/16 - 13-1/2	23072K	28	1.732	17.793	9.333	12.655	15.345	5.089	0.452
13-15/16 - 14	23076K	30	1.732	18.587	9.000	13.620	16.381	5.320	0.454
15	23080K	29	1.929	19.822	9.167	13.107	15.893	5.091	0.452
15-3/4	23084K	30	1.929	20.609	9.000	13.613	16.387	5.296	0.454
9-7/16 - 9-1/2	23152K	23	1.693	13.914	12.500	10.134	12.866	4.051	0.441
10-7/16 - 10-1/2	23156K	24	1.732	14.711	12.000	10.618	13.382	4.191	0.442
10-15/16 - 11	23160K	23	1.89	15.923	12.333	10.167	12.834	4.156	0.442
11-15/16 - 12	23164K	23	2.087	17.044	12.833	10.127	12.873	4.025	0.440
12-7/16 - 12-1/2	23168K	23	2.244	18.272	12.833	10.123	12.877	4.013	0.440
13-7/16 - 13-1/2	23172K	24	2.244	19.077	12.333	10.621	13.379	4.195	0.443
13-15/16 - 14	23176K	25	2.323	19.833	12.000	11.068	13.932	4.213	0.443
8-15/16 - 9	23248K	20	1.929	13.523	14.000	8.616	11.384	3.438	0.431
9-7/16 - 9-1/2	23252K	19	2.126	14.745	14.000	8.171	10.829	3.400	0.430
10-7/16 - 10-1/2	23256K	20	2.126	15.537	13.583	8.670	11.330	3.590	0.434
10-15/16 - 11	23260K	20	2.323	16.706	13.833	8.650	11.350	3.530	0.433
11-15/16 - 12	23264K	20	2.441	17.878	14.000	8.675	11.325	3.598	0.434
12-7/16 - 12-1/2	23268K	20	2.638	19.048	14.167	8.657	11.343	3.545	0.433

Outer Ring Frequency = N * RPM * (1 - (Bd * cos a / Pd)) / 120
Inner Ring Frequency = N * RPM * (1 + (Bd * cos a / Pd)) / 120
Roller Spin Frequency = Pd * RPM * (1 - (Bd * cos a / Pd) ^2) / (120 * Bd)
Cage Frequency = RPM * (1 - (Bd * cos a / Pd)) / 120

Pd = Pitch Diameter
N = Number of rollers
Bd = Roller Diameter
a = Contact Angle

*** Note:** Ball and Roller Spin Frequencies are listed at one (1X) roller spin frequency. For thorough analysis it is important to check frequency level at two (2X) rotational speed of balls or rollers as this is the frequency that a single ball/roller defect will contact the raceways of the bearing. In other words, a ball/roller defect will strike both inner and outer ring in one revolution of the roller.

Mounted Bearings Life Adjustment Factor

1.1 GENERAL. For certain applications, it is desirable to specify life for reliability other than 90%. In such cases a life adjustment factor for reliability may be applied to the RATING LIFE. Section 1.2 discusses life adjustment factors for reliability.

Some bearing steels; e.g., vacuum-melted steels, and improved processing techniques, permit manufacture of bearings which offer endurance greater than that calculated by the RATING LIFE formula. Section 1.3 recommends methods to incorporate life adjustment factors for bearing materials into the life formula.

Bearing life calculated according to the RATING LIFE formula assumes proper application conditions. If lubrication is not adequate, loading unusual, or temperatures extreme, the ability of the bearing to attain or exceed the RATING LIFE is seriously impaired. Section 1.4 contains some basic recommendations concerning the effect of unusual application conditions on bearing life.

1.2 LIFE ADJUSTMENT FACTOR FOR RELIABILITY. Bearing life estimated in accordance with this standard is RATING LIFE; i.e., the life associated With 90% reliability or the life which 90% of a group of apparently identical bearings in a given application under similar conditions of load and speed will complete or exceed. While RATING LIFE has proven useful over a period of years as a criterion of performance, some applications require definition of life at reliabilities greater than 90%.

To determine bearing life with reliabilities other than 90% (as previously calculated in the Selection Procedure) the L_{10} must be adjusted by factor a_1, such that $L_n=a_1$ x L10.

The life adjustment factors for reliability from Table 11 are recommended.

Table 11: Life Adjustment Factors For Reliability

Reliability %	Ln		Life Adjustment Factor for Reliability a1
90	L10		1
95	L5		0.62
96	L4	(Rating Life)	0.53
97	L3		0.44
98	L2		0.33
99	L1		0.21

1.3 LIFE ADJUSTMENT FACTOR FOR MATERIAL. For bearings, which incorporate improved materials and processing, the L_{10} (as previously calculated in the Selection Procedure) must be adjusted by factor a_2. Factor a_2 depends upon steel analysis, metallurgical processing, forming methods, heat treatment and manufacturing methods in general.

Bearings fabricated from consumable vacuum remelted steels and certain other special analysis steels have demonstrated extraordinarily long endurance. These steels are of exceptionally high quality, and bearings fabricated from these are usually considered special manufacture. As such, a_2 values will not be specified for such steels in this discussion. Generally, a_2 values for such steels can be obtained from the bearing manufacturer.

Mounted Bearings Life Adjustment Factor

1.4 LIFE ADJUSTMENT FACTOR FOR APPLICATION CONDITIONS. Application conditions which affect bearing life include:

1. Lubrication.
2. Load distribution (including effects of clearance, misalignment, housing, and shaft stiffness, type of loading and thermal gradients).
3. Temperature.
   Consideration of (1.2) and (1.3) above requires analytical and experimental techniques beyond the scope of this discussion, therefore, the user should consult the bearing manufacturer for evaluations and recommendations.
   In most bearing applications, lubrication serves to separate the rolling surfaces; i.e., rolling elements and raceways; to reduce retainer-rolling elements and retainer-land friction and sometimes to act as a coolant to remove frictional heat generated by the bearing.
   If all limitations and qualifications specified by this discussion are observed, then the life adjustment application factor for bearings which are adequately lubricated is 1; i.e., a_3=1.
   Operating conditions where a_3 might be less than 1 include:
   a) Exceptionally low values of Ndm (rpm times bore diameter in mm); e.g., Ndm 1000.
   b) Lubricant viscosity less than 20.4 centistokes (100 SUS) at operating temperature.
   c) Excessively high operating temperatures.
   When a3 is less than 1, it may not be assumed that the deficiency in lubrication can be overcome by using an improved steel.

1.5 FACTOR COMBINATIONS. A fatigue life formula including the life adjustment factors is:

Ball Bearings:

$$L_n = a_1 \times a_2 \times a_3 \left(\frac{C^*}{P}\right)^3 \times \frac{(16.667)}{RPM}$$

Tapered Roller Bearings:

$$L_n = a_1 \times a_2 \times a_3 \left(\frac{C90^*}{P}\right)^{10/3} \times \frac{(1{,}500{,}000)}{RPM}$$

Spherical Roller Bearings:

$$L_n = a_1 \times a_2 \times a_3 \left(\frac{C^*}{P}\right)^{10/3} \times \frac{(16.667)}{RPM}$$

Indiscriminate application of the life adjustment factors in this formula may lead to serious over-estimation of bearing endurance, since fatigue life is only one criterion for bearing selection.

Care must be exercised to select bearings which are of sufficient size for the application. Undersizing of shaft and housing structures by using bearings which appear adequate from a life standpoint could lead to misalignment and fitting problems which could invalidate the formulas in this discussion.

* C = Basic Load Rating computed in accordance with ABMA-ANSI Standards. C90 = C x .259

ENGINEERING

V-Belt Drive Formulas

V-belt tensioning In cases where tensioning of a drive effects belt pull and bearing loads, the following formulas may be used.

$$T_1 - T_2 = 33{,}000 \left(\frac{HP}{V}\right)$$

where: T_1 = tight side tension, pounds
T_2 = slack side tension, pounds
HP = design horsepower
V = belt speed, feet per minute

$$T_1 + T_2 = 33{,}000\ (2.5\text{-}G) \left(\frac{HP}{GV}\right)$$

where: T_1 = tight side tension, pounds
T_2 = slack side tension, pounds
HP = design horsepower
V = belt speed, feet per minute"
G = arc of contact correction factor*

$$T_1/T_2 = \frac{1}{1\text{-}0.8G} \quad (\text{Also } T1/T2 = e^{K\emptyset})$$

where: T_1 = tight side tension, pounds
T_2 = slack side tension, pounds
G = arc of contact correction factor*
e = base of natural logarithms
K = .51230, a constant for V-belt drive design
Ø = arc of contact in radians

$$T_1 = 41{,}250\ (HP/GV)$$

where: T_1 = tight side tension, pounds
HP = design horsepower
V = belt speed, feet per minute
G = arc of contact correction factor

$$T_2 = 33{,}000\ (1.25\text{-}G)\ (HP/GV)$$

where: T_2 = slack side tension, pounds
HP = design horsepower
V = belt speed, feet per minute
G = arc of contact correction factor

Belt Speed

$$V = \frac{(PD)\ (RPM)}{3.82} = (PD)\ (rpm)\ (.262)$$

where: V = belt speed, feet per minute
PD = pitch diameter of sheave or pulley
rpm = revolutions per minute of the same sheave or pulley

* See Table 12 at left

Table 12: Arc of Contact Correction Factor G

D-d / C	Small Sheave Arc of Contact	Factor G	D-d / C	Small Sheave Arc of Contact	Factor G
.00	180°	1.00	.80	133°	.87
.10	174°	.99	.90	127°	.85
.20	169°	.97	1.00	120°	.82
.30	163°	.96	1.10	130°	.80
.40	157°	.94	1.20	106°	.77
.50	151°	.93	1.30	99°	.73
.60	145°	.91	1.40	91°	.70
.70	139°	.89	1.50	83°	.65

D = Diam. of large sheave. d = Diam. of small sheave
C = Center distance

Table 13: Allowable Sheave Rim Speed

Sheave Material	Rim Speed in Feet per Minute
Cast Iron	6,500
Ductile Iron	8,000
Steel	10,000

NOTE: Above rim speed values are maximum for normal considerations. In some cases these values may be exceeded. Consult factory and include complete details of proposed application.

$$\text{Dynamic balance RPM for Sheave/Sprocket} \lozenge = \frac{15600}{\sqrt{\text{Dia x Face Width}}}$$

◊ **Note:** MPTA recommends Dynamic balance when application RPM exceeds this value.

Bearing Load Calculations

To find actual bearing loads, it is necessary to know machine component weights and values of all other forces contributing to the load. Sometimes it becomes desirable to know the bearing load imposed by the V-belt drive alone. This can be done if you know bearing spacing with respect to the sheave center and shaft load and apply it to the following formulas:

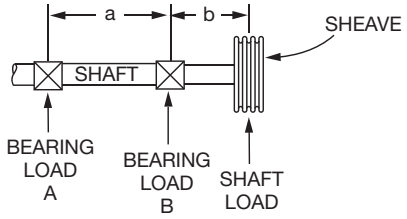

Overhung Sheave

$$\text{Load at B, lbs.} = \frac{\text{Shaft Load x (a + b)}}{a}$$

$$\text{Load at A, lbs} = \text{Shaft Load x } \frac{b}{a}$$

Where: a and b = Spacing, inches

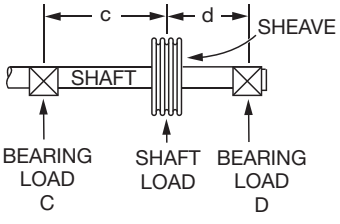

Sheave Between Bearings

$$\text{Load at D, lbs.} = \frac{\text{Shaft Load x c}}{c + d}$$

$$\text{Load at C, lbs} = \frac{\text{Shaft Load x d}}{c + d}$$

Where: c and d = Spacing, inches

Nominal V-Belt Cross Sections

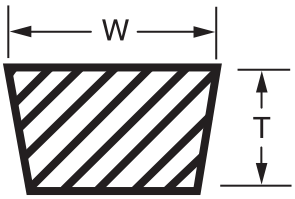

Table 14: Nominal V-Belt Cross Sections

Belt Section	Industry Standard Description	Width W, in Inches	Thickness T, in Inches
3L	FHP, Single	3/8	7/32
4L		1/2	5/16
5L		21/32	3/8
3V	Narrow	3/8	5/16
5V		5/8	17/32
8V		1	29/32
A	Classical Multiple	1/2	5/16
B		21/32	13/32
C		7/8	17/32
D		1-1/4	3/4

Table 15: Maximum Pulley RPM*

Pulley Dia. Inches	FPM												
	100	150	200	250	300	350	400	500	600	700	800	900	1000
6	64	95	127	159	191	223	254	318	382	445	509	573	636
8	48	72	95	119	143	167	191	239	286	334	382	429	477
10	38	57	76	95	115	134	153	191	229	267	305	344	382
12	32	48	64	80	95	111	127	159	191	223	254	286	318
14	27	41	55	68	82	95	109	136	164	191	218	245	273
16	24	36	48	60	72	83	95	119	143	167	191	215	239
18	21	32	42	53	64	74	85	106	127	148	170	191	212
20	19	29	38	48	57	67	76	95	115	134	153	172	191
24	16	24	32	40	48	56	64	80	95	111	127	143	159
30	13	19	25	32	38	45	51	64	76	89	102	115	127
36	11	16	21	27	32	37	42	53	64	74	85	95	106
42	9	14	18	23	27	32	36	45	55	64	73	82	91
48	8	12	16	20	24	28	32	40	48	56	64	72	80
54	7	11	14	18	21	25	28	35	42	49	57	64	71
60	6	10	13	16	19	22	25	32	38	45	51	57	64

* Maximum RPM values shown are based on 6,500 feet per minute for standard cast iron products. For higher rim speeds, contact Dodge Technical Support at 1-864-284-5700
For values not shown use formula below:

$$\text{Max RPM} = \frac{6{,}500}{.2618 \times D}$$

D = Pulley Diameter, Inches

ENGINEERING

Table 16: Material Characteristics

MATERIAL	DENSITY (LB/fT3)	ANGLE OF REPOSE (DEG)	RECOMMENDED MAXIMUM INCLINATION
Alfalfa, Ground	16	45°	
Alum, Lumpy	50 - 60	35°	
Alum, Pulverized	45 - 50	35°	
Alumina	60	30°	10-12
Aluminum Oxide	70 - 120	30°	
Ammonium Sulphate	45 - 60	45°	
Asbestos, Shredded	20 - 25	45°	
Ashes, Dry	35 - 40	45°	
Ashes, Wet	45 - 50	45°	
Ashes, Soft Coal	35 - 45	40°	
Asphalt, Crushed	45	35°	
Bagasse	7.50	45°	
Bakelite, Powder	30 - 40	45°	
Baking Powder	40 - 50	35°	
Bark, Wood Refuse	10 - 20	45°	27
Barley	38	25°	10-15
Basalt	80 - 120	25°	
Bauxite, Crushed	75 - 85	35°	20
Beans, Castor, Whole	30 - 45	25°	8-10
Beans, Cocoa	30 - 45	35°	
Beans, Navy	50	25°	
Beans, Whole	45	45°	
Bentonite, Crude	35 - 40	45°	
Bentonite, Fine	50 - 60	45°	
Bones, Pulverized	50 - 60	45°	
Borax, Fine	50 - 55	35°	
Borax Coarse	60 - 70	35°	
Bran	16	35°	
Brewers Grain, Dry	25 - 35	45°	
Brewers Grain, Wet	55 - 60	45°	
Buck Wheat	40	25°	11-13
Calcium, Carbide	70 - 80	35°	
Carbon Black, Pellets	25	25°	
Carbon Black, Powder	5	35°	
Cast Iron Chips	100 -120	45°	
Cement, Clinker	75 - 90	35°	
Cement, Portland	80 -100	35°	20-23
Chalk, Fine	65 - 75	45°	
Chalk, Lumpy	80 - 95	45°	
Charcoal, Wood	15 - 30	35°	20-25
Chromium Ore	125 - 140	35°	
Cinders, Coal	40	35°	20
Clay, Dry, Fine	100 - 120	35°	20-22
Clay, Dry, Lumpy	60 - 75	35°	18-20
Coal, Anthracite, Coarse	60 - 70	35°	18
Coal, Anthracite, Loose	50 - 60	30°	16
Coal, Bituminous, Coarse	50 - 60	35°	18
Coal, Bituminous, Loose	45 - 50	35°	16
Cocoa Nibs	35 - 40	35°	
Coconut, Shredded	20 - 25	45°	
Coffee, Fresh Beans	30 - 40	35°	10-15
Coffee, Roasted Beans	22 - 30	25°	
Coke, Loose	23 - 32	35°	18
Coke Pulverized	25 - 35	45°	20-22
Coke, Petroleum Calcinated	35 - 45	35°	20
Concrete, Cinder	112	0°	12-30
Concrete, Gravel & Sand	150	0°	
Copper Ore	120 - 150	35°	20
Copper Sulfate	75 - 85	30°	17
Cork, Ground	5 - 15	45°	
Corn, On Cob	45	0°	
Corn, Shelled	45	25°	10
Corn Sugar	30	35°	
Corn Grits	40 - 45	35°	
Cornmeal	32- 40	35°	22
Cottonseed, Dry, De-Linted	35	35°	16
Cottonseed, Dry, Not De-Linted	18- 25	45°	19
Cottonseed, Cake, Lumpy	40- 45	35°	
Cottonseed, Hulls	12	45°	
Cottonseed, Meal	35- 40	35°	22
Cottonseed, Meats	40	35°	
Cryolite	90-110	35°	
Cullet	80-120	35°	20
Diatomaceous Earth	11- 14	35°	
Dolomite, Lumpy	90-100	35°	22
Dolomite, Pulverized	46	40°	
Earth, Dry"	70- 80	35°	20
Earth, Moist	75-110	40°	23
Earth, Fullers Dry	30- 35	23°	20
Emery	225	25°	
Epsom Salt	40- 50	35°	
Feldspar, Lumps	70-100	35°	17
Feldspar, Dust	80-100	40°	
Fish, Meal	35- 40	40°	
Fish, Scrap	40- 50	0°	
Flaxseed, Whole	45	25°	12
Flaxseed, Meal	25	35°	
Flour, Wheat	35- 40	45°	21
Flue Dust, Dry	30- 40	20°	
Fluorspar, Dust	85- 95	45°	
Fluorspar, Lumps	80-110	45°	
Foundry, Refuse	60- 80	35°	
Foundry Sand, Loose	80- 90	35°	
Foundry Sand, Rammed	100-110	0°	
Galena	250	35°	
Garbage, Average	30	25°	
Glass, Batch Fiber	45 - 55	10°	
Glass, Batch Wool	80-100	35°	20-22
Glass, Broken	80-100	10°	
Glue, Animal, Flaked	35	25°	
Glue, Vegetable, Powdered	40	35°	
Gluten, Meal	39	35°	
Granite, Lumps	150 -170	25°	
Graphite, Flakes	40	35°	
Graphite, Powder	30	25°	
Graphite, Ore	65 - 75	35°	
Grass Seed	10	35°	
Gravel, Dry	90-100	35°	15-17
Gravel, Wet	100-120	35°	
Gypsum, Lumps	90-100	35°	15
Gypsum, Ground	75- 80	35°	21
Hay, Loose	5	0°	
Hay, Pressed	25	0°	
Hominy	35- 50	35°	
Hops, Spent, Dry	25- 35	45°	
Hops, Spent, Wet	55- 60	45°	
Ice, Crushed	35- 40	20-	
Ilmenite Ore	140-160	35°	
Iron Ore	120-180	35°	18-20
Iron Ore, Pellets	120-140	35°	13-15
Iron Sulphate	50- 75	35°	
Iron Sulfide	120-140	35°	

Table 16: Material Characteristics (Continued)

MATERIAL	DENSITY (LB/fT3)	ANGLE OF REPOSE (DEG)	RECOMMENDED MAXIMUM INCLINATION
Kaolin, Clay	60	35°	19
Lactose	30	35°	
Lead Ore, Crushed	180 - 270	30°	
Lead Oxides	60 - 150	40°	
Lead Sulfate	170 - 190	45°	
Lead Sulfide	240 - 260	35°	
Lignite, Air Dried	45 - 55	35°	
Lime, Ground	60 - 65	40°	23
Lime, Hydrated	40	40°	21
Lime, Pebble	30 - 40	40°	17
Limestone, Loose	80 - 100	35°	20
Limestone, Pulverized	85 - 90	45°	18
Linseed, Whole	45 - 50	25°	
Linseed, Meal	30 - 40	35°	20
Magnesium Chloride	30 - 35	40°	
Magnesium Sulfate	40 - 60	35°	
Malt, Dry	25 - 30	30°	
Malt, Wet	60 - 65	45°	
Malt, Meal	35 - 40	35°	
Manganese Ore	125 - 140	40°	
Manganese Oxide	120	35°	
Manganese Sulfate	70	35°	
Manure	25	0°	
Marble, Crushed	80 - 95	35°	
Marl	80	35°	
Mica, Flakes	20	20°	
Mica, Ground	15	35°	23
Milk, Dried, Flaked	5	35°	
Milk, Malted	25 - 35	45°	
Milk, Powdered	20 - 30	40°	
Milo Maize	55 - 60	35°	
Molybdenum Ore	100 - 110	40°	
Mortar, Wet	150	0°	
Niacin	35	35°	
Nickel-Cobalt Sulfate Ore	80 - 150	35°	
Oats	25 - 35	25°	10
Oats, Rolled	20	35°	
Oil Cake	50	45°	
Oxalic Acid Crystals	60	35°	
Oyster Shells, Ground	50 - 60	35°	
Oyster Shells, Whole	80	35°	
Paper Pulp Stock	40 - 60	20°	
Peanuts, Shelled	35 - 45	35°	
Peanuts, Not Shelled	15 - 20	35°	
Peas, Dried	45 - 50	0°	
Phosphate, Fertilizer	50 - 60	35°	30
Phosphate, Rock, Crushed	60 - 100	35°	25
Potash	70 - 80	30°	
Potassium Chloride	120 - 130	35°	
Potassium Nitrate	75 - 80	25°	
Potassium Sulfate	45	45°	
Potatoes, White”	48	0°	
Pumice, Ground	40 - 45	45°	
Pyrites, Lumps	135 - 145	25°	
Pyrites, Pellets	120 - 130	35°	
Quartz, Lumps	95 - 100	25°	
Quartz, Sand	70 - 80	25°	
Rice, Hulled	45 - 50	20°	8
Rice, Rough	35	35°	
Rice, Grits	40 - 45	35°	
Rock, Crushed	100 - 150	30°	

MATERIAL	DENSITY (LB/fT3)	ANGLE OF REPOSE (DEG)	RECOMMENDED MAXIMUM INCLINATION
Rubber, Pellets	50 - 55	35°	22
Rubber, Ground Scrap	25 - 35	45°	18
Rye	42 - 45	25°	8
Rye Meal	35 - 40	20°	
Salt Cake	80 - 95	30°	21
Salt, Coarse”	45 - 55	35°	18-22
Salt, Fine”	70 - 80	35°	11
Sand, Wet	110 - 130	45°	20-22
Sand, Dry	90 - 110	35°	16-18
Sand, Loose, Foundry	80 - 100	35°	22
Sand, Foundry, Rammed	100 - 110	0°	24
Sandstone	80 - 90	35°	
Sawdust	10 - 25	30°	22
Scale, Rolling Mill	125 - 160	45°	
Sewage Sludge, Dry	45 - 55	35°	
Sewage Sludge, Wet	50 - 60	35°	
Shale, Broken	90 - 100	25°	
Shale, Crushed	85 - 90	40°	22
Silica Gel, Dry	45	35°	
Slag, Blast Furnace	80 - 90	25°	10
Slag, Granular, Dry	60 - 65	25°	13-16
Slag, Granular, Wet	90 - 100	45°	20-22
Slate, Ground	80 - 90	30°	15
Slate, Lumps	85 - 95	0°	
Snow, Compacted	15 - 50	0°	
Soap	10 - 25	35°	
Soda Ash, Briquettes	50	20°	7
Soda Ash, Heavy	55 - 65	30°	19
Soda Ash, Light	20 - 35	35°	22
Sodium Aluminum, Ground	72	35°	
Sodium Nitrate, Ground	70 - 80	24°	11
Sodium Phosphate	50 - 65	35°	
Soybeans, Cracked	30 - 40	35°	15-18
Soybeans, Whole”	45 - 50	25°	12-16
Starch, Powdered	25 - 45	25°	12
Steel, Chips	100 - 150	35°	18
Steel, Turnings	60 - 120	45°	
Sugar, Cane, Raw	55 - 65	45°	
Sugar. Granulated, Dry	50 - 55	35°	
Sugar, Granulated, Wet	55 - 65	40°	
Sugar Cane, Knifed	15 - 18	45°	
Sulphur, Lumps	80 - 85	35°	
Sulphur, Dust	50 - 70	35°	
Saconite, Pellets	120 - 140	35°	13-15
Salc, Granulated	50 - 70	20°	
Titanium Dioxide	140	35°	
Titanium Sponge	60 - 70	45°	
Tobacco, Leaves	14	45°	
Tobacco, Scraps	15 - 25	45°	
Tobacco, Stems	15	45°	
Traprock, Crushed	95 - 110	35°	
Traprock, Lumps	100 - 110	35°	
Turf	20 - 30	0°	
Walnut, Shells	35 - 45	35°	
Wheat	48	25°	12
Wheat, Cracked	40 - 45	35°	
Wheat Germ, Dry	20 - 30	25°	27
Wood Chips	10 - 30	45°	22
Zinc Ore, Granular	160	35°	
Zinc Oxide	10 - 35	45°	

ENGINEERING

Shafting

Table 17: Typical Commercial Shaft Tolerances

Shaft Size	Plus	Minus
Up to 1-1/2”	.000	.002
Over 1-1/2 to 2-1/2”	.000	.003
Over 2-1/2 to 4”	.000	.004
Over 4 to 6”	.000	.005
Over 6 to 8”	.000	.006
Over 8 to 9”	.000	.007
Over 9”	.000	.008

Table 18: Shaft Tolerances

Shaft Size	Tolerance, Inches
Up to 1-1/2”	+.0000 -.0005”
1-5/8 to 4”	+.000 -.001”
4-7/16 to 6”	+.000 -.0015”
6-7/16 to 8”	+.000 -.002”

Table 18 lists the recommended tolerances for all setscrew locking, eccentric locking and D-LOK locking ball and roller bearings

Table 19: Shaft Tolerances

Shaft Size	Tolerance, Inches
Up to 1-1/2”	+.000 -.002”
1-9/16 to 2-1/2”	+.000 -.003”
2-5/8 to 4”	+.000 -.004”
4-3/16 to 6”	+.000 -.005”
6-7/16” and above	+.000 -.006”

Table 19 list the recommended tolerances for all tapered adapter sleeve ball and roller bearings

Standard Shafting-Table 17 indicates standard shafting is cold drawn in the smaller sizes and turned and polished in the larger diameters. It has a smooth surface, is commercially straight and is readily machinable; suitable and recommended for general power transmission and material handling service.

Special Shafting-While standard shafting is suitable for most installations, special shafting is sometimes required for certain chemical, temperature or physical requirements. Such materials as high carbon steel, alloy steel, stainless steel, brass, Monel metal, etc., can be furnished plain or heat treated. Stepped, flanged, hollow or other special forms are available.

Special shafting should be avoided in favor of standard shafting wherever possible because special shafting is usually considerably more expensive and requires a greater length of time to obtain, which is an especially important consideration should quick replacement ever become necessary.

Ordering Shafting-Standard shafting can be obtained from most supply houses and dealers who handle power transmission material.

Turning Down Shaft Ends-When necessary to turn down shaft ends, use as large a fillet as possible to keep the stress concentration to a minimum. The radius of this fillet should preferably be not less than the difference in the two diameters joined by the fillet. The fillet should be finished and polished as smoothly as possible to avoid scratches which might start cracks and lead to failure of the shaft by fatigue.

Selection of Shaft Diameters

Tables 21 - 24 inclusive can be used to find approximate shaft diameter for various service conditions For greater accuracy use chart under heading “Combined Torsion and Bending of Standard Shafts” (B20-17).

Tables and chart are based upon a safe shear stress of 6,000 pounds per square inch for standard keyseated shafting. Be generous in the selection of shaft diameters as liberal diameters not only reduce deflection and vibration but also generally increase bearing life.

When necessary to use other than standard shafting, find the required diameter for standard shafting as outlined above and multiply by proper factor shown in Table 25, under heading “Factors for Shafting Other than Standard Shafting, “(B20-16).

Table 20: No Bending Moment (Shafts without pulleys, sprockets or gears - Torsion only)

Shaft Size	Horse Power at Various Revolutions per Minute																		
	25	50	75	100	125	150	175	200	225	250	275	300	350	400	500	600	700	800	900
15/16	0.30	0.70	1.10	1.50	1.90	2.30	2.60	3.00	3.40	3.80	4.20	4.60	5.30	6.10	7.70	9.20	10.70	12.30	13.80
1-3/16	0.70	1.50	2.30	3.10	3.90	4.60	5.40	6.20	7.00	7.80	8.60	9.30	10.90	12.50	15.60	18.70	21.90	25.00	28.10
1-7/16	1.30	2.70	4.10	5.50	6.90	8.30	9.70	11.10	12.40	13.80	15.20	16.60	19.40	22.20	27.70	33.30	38.80	44.40	49.90
1-11/16	2.20	4.40	6.60	8.90	11.20	13.40	15.70	17.90	20.20	22.40	24.70	26.90	31.40	35.90	44.90	53.80	62.80	71.80	80.80
1-15/16	3.30	6.70	10.10	13.50	16.90	20.30	23.70	27.10	30.50	33.90	37.30	40.70	47.50	54.30	67.90	81.50	95.10	108.00	122.00
2-3/16	4.90	9.80	14.60	19.50	24.40	29.30	34.20	39.10	44.00	48.90	53.80	58.60	68.40	78.20	97.80	117.00	136.00	156.00	176.00
2-7/16	6.70	13.50	20.20	27.00	33.80	40.60	47.30	54.10	60.90	67.60	74.40	81.20	94.70	108.00	135.00	162.00	189.00	216.00	243.00
2-11/16	9.00	18.10	27.10	36.20	45.30	54.40	63.40	72.50	81.60	90.70	99.70	108.00	126.00	145.00	181.00	217.00	253.00	290.00	326.00
2-15/16	11.80	23.60	35.40	47.30	59.20	71.00	82.90	94.70	106.00	118.00	130.00	142.00	165.00	189.00	236.00	284.00	331.00	379.00	426.00
3-7/16	19.00	37.90	57.00	75.90	94.90	113.00	132.00	151.00	170.00	189.00	208.00	227.00	265.00	303.00	379.00	455.00	531.00	607.00	683.00
3-15/16	28.50	57.00	85.50	114.00	142.00	171.00	199.00	228.00	256.00	285.00	313.00	342.00	399.00	456.00	570.00	684.00	798.00	912.00	1026.00
4-7/16	40.80	81.60	122.00	163.00	204.00	245.00	286.00	327.00	367.00	408.00	449.00	490.00	572.00	653.00	816.00	980.00	1143.00	1306.00	1470.00

Table 21: Limited Bending Moment (Pulleys, sprockets or gears near bearings. Ordinary line shafts.)

Shaft Size	Horse Power at Various Revolutions per Minute																		
	25	50	75	100	125	150	175	200	225	250	275	300	350	400	500	600	700	800	900
15/16	0.20	0.50	0.70	1.00	1.20	1.50	1.70	2.00	2.30	2.50	2.80	3.00	3.50	4.10	5.10	6.10	7.10	8.20	9.20
1-3/16	0.50	1.00	1.50	2.00	2.60	3.10	3.60	4.10	4.70	5.20	5.70	6.20	7.30	8.30	10.40	12.50	14.60	16.70	18.80
1-7/16	0.90	1.80	2.70	3.70	4.60	5.50	6.40	7.40	8.30	9.20	10.10	11.10	12.90	14.80	18.50	22.20	25.90	29.60	33.30
1-11/6	1.40	2.90	4.30	5.90	7.40	8.90	10.40	11.90	13.40	14.90	16.40	17.90	20.90	23.90	29.90	35.90	41.90	47.90	53.90
1-15/16	2.20	4.50	6.70	9.00	11.30	13.60	15.80	18.10	20.40	22.60	24.90	27.20	31.70	36.20	45.30	54.40	63.40	72.50	81.60
2-3/16	3.20	6.50	9.70	13.00	16.30	19.50	22.80	26.10	29.30	32.60	35.80	39.10	45.60	52.20	65.20	78.30	91.30	104.00	117.00
2-7/16	4.50	9.00	13.50	18.00	22.50	27.00	31.60	36.10	40.60	45.10	49.60	54.10	63.20	72.20	90.20	108.00	126.00	144.00	162.00
2-11/16	6.00	12.10	18.10	24.20	30.20	36.30	42.30	48.40	54.40	60.50	66.50	72.60	84.70	96.80	121.00	145.00	169.00	193.00	217.00
2-15/16	7.90	15.80	23.70	31.60	39.50	47.40	55.30	63.20	71.10	79.00	86.90	94.80	110.00	126.00	158.00	189.00	221.00	252.00	284.00
3-7/16	12.60	25.30	37.90	50.60	63.30	75.90	88.60	101.00	113.00	126.00	139.00	151.00	177.00	202.00	253.00	303.00	354.00	405.00	455.00
3-15/16	19.00	38.00	57.00	76.10	94.10	114.00	133.00	152.00	171.00	190.00	209.00	228.00	266.00	304.00	380.00	456.00	532.00	608.00	685.00
4-7/16	27.00	54.00	81.00	108.00	136.00	163.00	190.00	217.00	245.00	272.00	299.00	326.00	381.00	435.00	544.00	653.00	762.00	871.00	980.00
4-15/16	37.00	75.00	112.00	150.00	187.00	225.00	262.00	300.00	337.00	375.00	412.00	450.00	525.00	600.00	750.00	900.00	1050.00	1200.00	1350.00
5-7/16	50.00	100.00	150.00	200.00	250.00	300.00	350.00	400.00	451.00	501.00	551.00	601.00	701.00	801.00	1002.00	1202.00	1403.00	1603.00	1804.00
5-15/16	65.00	130.00	195.00	261.00	326.00	391.00	456.00	522.00	587.00	652.00	717.00	783.00	913.00	1044.00	1305.00	1566.00	1827.00	2088.00	2349.00
6-1/2	85.00	171.00	256.00	342.00	427.00	513.00	598.00	684.00	769.00	855.00	940.00	1026.00	1197.00	1368.00	1710.00	2052.00	2394.00	2736.00	3078.00

Selection of Shaft Diameters (Continued)

Table 22: Heavy Bending Moment. (Use for main or important shafts.)

Shaft Size	Horse Power at Various Revolutions per Minute																		
	25	50	75	100	125	150	175	200	225	250	275	300	350	400	500	600	700	800	900
1-11/16	0.80	1.70	2.50	3.50	4.40	5.30	6.20	7.10	8.00	8.90	9.80	10.70	12.50	14.30	17.90	21.50	25.10	28.70	32.30
1-15/16	1.30	2.70	4.00	5.40	6.70	8.10	9.50	10.80	12.20	13.50	14.90	16.30	19.00	21.70	27.10	32.60	38.00	43.50	48.90
2-3/16	1.90	3.90	5.80	7.80	9.70	11.70	13.70	15.60	17.60	19.50	21.50	23.40	27.40	31.30	39.10	46.90	54.80	62.60	70.40
2-7/16	2.70	5.40	8.10	10.80	13.50	16.20	18.90	21.60	24.30	27.00	29.70	32.40	37.90	43.30	54.10	64.90	75.80	86.60	97.40
2-11/16	3.60	7.20	10.80	14.50	18.10	21.70	25.40	29.00	32.60	36.20	39.90	43.50	50.80	58.00	72.50	87.10	101	116	130
2-15/16	4.70	9.40	14.10	18.90	23.60	28.40	33.10	37.90	42.60	47.30	52.10	56.80	66.30	75.80	94.70	113	132	151	170
3-7/16	7.50	15.10	22.60	30.30	37.90	45.50	53.10	60.70	68.30	75.90	83.50	91.10	106	121	151	182	212	243	273
3-15/16	11.40	22.80	34.20	45.60	57.00	68.40	79.90	91.30	102	114	125	136	159	182	228	273	319	365	410
4-7/16	16.30	32.60	48.90	65.30	81.60	98.00	114	130	147	163	179	196	228	261	326	392	457	522	588
4-15/16	22.50	45.00	67.50	90.00	112	135	157	180	202	225	247	270	315	360	450	540	630	720	810
5-7/16	30.00	60.00	90.00	120	150	180	210	240	270	300	330	360	420	480	601	721	841	961	1082
5-15/16	39.00	78.00	117	156	195	234	273	313	352	391	430	469	547	626	782	939	1095	1252	1409
6-1/2	51.00	102	153	205	256	308	359	410	462	513	564	616	718	821	1027	1232	1437	1643	1848
7	64.00	128	192	256	320	384	448	513	577	641	705	769	897	1026	1282	1539	1795	2052	2308
7-1/2	78.50	157	235	315	394	473	552	631	709	788	867	946	1104	1262	1577	1893	2208	2524	2839
8	95.50	191	286	382	478	574	670	765	861	957	1053	1148	1340	1531	1914	2297	2680	3063	3446
8-1/2	114	229	343	459	574	688	803	918	1033	1148	1263	1377	1607	1837	2296	2755	3215	3674	4133
9	136	272	408	545	681	817	954	1090	1226	1363	1499	1635	1908	2181	2726	3271	3816	4362	4907
9-1/2	160	320	480	641	801	961	1122	1282	1442	1603	1763	1923	2244	2565	3206	3847	4488	5130	5771
10	186	373	559	747	934	1121	1308	1495	1682	1869	2056	2243	2617	2991	3739	4487	5235	5983	6731

Table 23: Severe Conditions (Heavy shock loads. Excessively tight belts, long clutch sleeves.)

Shaft Size	Horse Power at Various Revolutions per Minute																		
	25	50	75	100	125	150	175	200	225	250	275	300	350	400	500	600	700	800	900
1-11/16	0.4	0.89	1.20	1.70	2.20	2.60	3.10	3.50	4.00	4.40	4.90	5.30	6.20	7.10	8.90	10.70	12.50	14.30	16.10
1-15/16	0.6	1.39	2.00	2.70	3.30	4.00	4.70	5.40	6.10	6.70	7.40	8.10	9.50	10.80	13.50	16.30	19.00	21.70	24.40
2-3/16	0.90	1.90	2.90	3.90	4.80	5.80	6.80	7.80	8.80	9.70	10.70	11.70	13.70	15.60	19.50	23.40	27.40	31.30	35.20
2-7/16	1.30	2.70	4.00	5.40	6.70	8.10	9.40	10.80	12.10	13.50	14.80	16.20	18.90	21.60	27.00	32.40	37.90	43.30	48.70
2-11/16	1.80	3.60	5.40	7.20	9.00	10.80	12.70	14.50	16.30	18.10	19.90	21.70	25.40	29.00	36.20	43.50	50.50	58.00	65.00
2-15/16	2.30	4.70	7.00	9.40	11.80	14.20	16.50	18.90	21.30	23.60	26.00	28.40	33.10	37.90	47.30	56.50	66.00	75.50	85.00
3-7/16	3.70	7.50	11.30	15.10	18.90	22.70	26.50	30.30	34.10	37.90	41.70	45.50	53.00	60.50	75.50	91.00	106	121	136
3-15/16	5.70	11.40	17.10	22.80	28.50	34.20	39.90	45.60	51.00	57.00	62.50	68.00	79.50	91.00	114	136	159	182	205
4-7/16	8.10	16.30	24.40	32.60	40.80	49.00	57.00	65.00	73.50	81.50	89.50	98.00	114	130	163	196	228	261	294
4-15/16	11.20	22.50	33.70	45.00	56.00	67.50	78.50	90.00	101	112	123	135	157	180	225	270	315	360	405
5-7/16	15.00	30.00	45.00	60.00	75.00	90.00	105	120	135	150	165	180	210	240	300	360	420	480	541
5-15/16	19.50	39.00	58.50	78.00	97.10	117	136	156	171	195	215	234	273	313	391	469	547	626	704
6-1/2	25.50	51.00	76.50	102.5	128	154	179	205	231	256	282	308	359	410	513	616	718	821	924
7	32.00	64.90	96.00	128	160	192	224	256	288	320	352	384	448	513	641	769	897	1026	1154
7-1/2	39.20	78.50	117	157	197	236	276	315	354	394	433	473	552	631	788	946	1104	1262	1419
8	47.70	95.50	143	191	239	287	335	382	430	478	526	574	670	765	957	1148	1340	1531	1723
8-1/2	57.00	114	171	229	287	344	401	459	516	574	631	688	803	918	1148	1377	1607	1837	2066
9	68.00	136	204	272	340	408	477	545	613	681	749	817	954	1090	1363	1635	1908	2181	2453
9-1/2	80.00	160	240	320	400	480	561	641	721	801	881	961	1122	1282	1603	1923	2244	2565	2885
10	93.00	186	279	373	467	560	654	747	841	934	1028	1121	1308	1495	1869	2243	2617	2991	3365

Caution: Be generous in the selection of shaft diameters as liberal diameters not only reduce deflection and vibration but also generally increase bearing life. See notes on next page.

Selection of Shaft Diameters (Continued)

Shaft Stiffness, Shaft Deflection-Standard shafting of adequate strength usually has a sufficiently large diameter to prevent excessive deflection in ordinary installations. It is wise to select shafting of generous diameter, as the greater the diameter, the greater the stiffness. A high tensile strength alloy shaft, although stronger, is no stiffer than a standard shaft of the same diameter.

While it is sometimes possible to use an alloy shaft of less diameter than a standard shaft of equal strength, this practice is usually inadvisable, as the deflection is increased.

Shafts carrying medium or long clutch sleeves should be especially generous.

High Speed Shafts - High speed sometimes causes shaft whipping or vibration. This can be prevented by making the shaft diameter generous and the distance between bearing centers short.

Location of the bearings close to wheels and couplings is advisable whether the shaft is transmitting heavy or light loads.

The use of high tensile strength alloy shafting instead of standard shafting is of no help in preventing vibration as this will not improve the stiffness nor deflection characteristics of the shaft.

Stepped Shafts - For a heavily loaded wheel, a shaft with a boss or enlarged section under the wheel and turned to a smaller diameter at the bearings often provides the most economical installation. The two different diameters should be joined by a very generous fillet, otherwise a dangerous concentration of stress will occur at the fillet. See heading - "Turning Down Shaft Ends." (B16-15).

Shaft Keyseats - Plain keyseats are preferable to round end keyseats in respect to causing the least concentration of stress. However, round end keyseats are often used because of design and assembly requirements. Ends left by the milling cutter should not project into babbitted or bronze bushed bearing, but may project under the sleeve of any DODGE anti-friction bearing.

Shaft diameters obtained from the tables or chart allow for the use of keyseats.

Shaft Bearings - On ordinary line shafting, bearings are commonly spaced about eight feet centers. On large diameter shafts, the spacing may be somewhat greater.

Wheels and clutches should be located near bearings to avoid dangerous bending, deflection and vibration.

Bearings should be mounted on adequate supports so that accurate alignment may be maintained. Shaft misalignment may cause shaft or bearing failure.

Shaft Couplings - Where a rigid coupling is used, it is preferable to have a bearing fairly close. Where a cutoff coupling or a flexible coupling is used, locate bearings close to each end of the coupling.

Expansion of Shafting - Where changes in the length of the shaft due to changes in temperature are to be expected and the bearings are mounted on supporting structures other than steel, consideration must be given to expansion. For more detailed information see B16-20, headed: "Expansion of Shafting."

Factors for Shafting Other Than Standard Shafting

When it is necessary to use other than standard shafting, multiply required diameter for standard shafting as found in the tables or chart by proper factor from Table 24 below.

Standard keyseated shafting, using a safe shear stress of 6,000 PSI is the basis of shafting tables and chart. For safe shear stress of other materials, use 1/10 of nominal ultimate tensile strength. For example, use 8,000 for C1045 and 10,000 for 4140 keyseated shafting. When definite physical specifications are known the least of 13.5% of minimum ultimate tensile strength and 22.5% of minimum elastic limit in tension may be used for keyseated shafting; 18% and 30% respectively if not keyseated.

Caution - As the deflection of steel shafting depends upon the diameter and not upon the analysis of the steel, care should be exercised in the use of alloy shafting not to reduce the diameter unduly. Deflection should not be excessive and bearing capacities should be adequate. It is usually best to use standard shafting instead of a smaller diameter alloy shaft. The smaller alloy shaft may safely transmit the torque but often is undesirable in respect to deflection, vibration and bearing life

Table 24: Shear Stress Factors

Safe Shear Stress	Factor	Safe Shear Stress	Factor	Safe Shear Stress	Factor	Safe Shear Stress	Factor	Safe Shear Stress	Factor
500	2.289	3,000	1.260	5,500	1.029	9,000	.874	14,000	.754
1,000	1.817	3,500	1.197	6,000	1.000	10,000	.843	15,000	.737
1,500	1.587	4,000	1.145	6,500	.974	11,000	.817	16,000	.721
2,000	1.442	4,500	1.101	7,000	.950	12,000	.794	17,000	.707
2,500	1.339	5,000	1.063	8,000	.909	13,000	.773	18,000	.693

Combine Torsion and Bending of Standard Shaft (Based on a Safe Shear Stress of 6,000 PS for Keyseated Shafting)

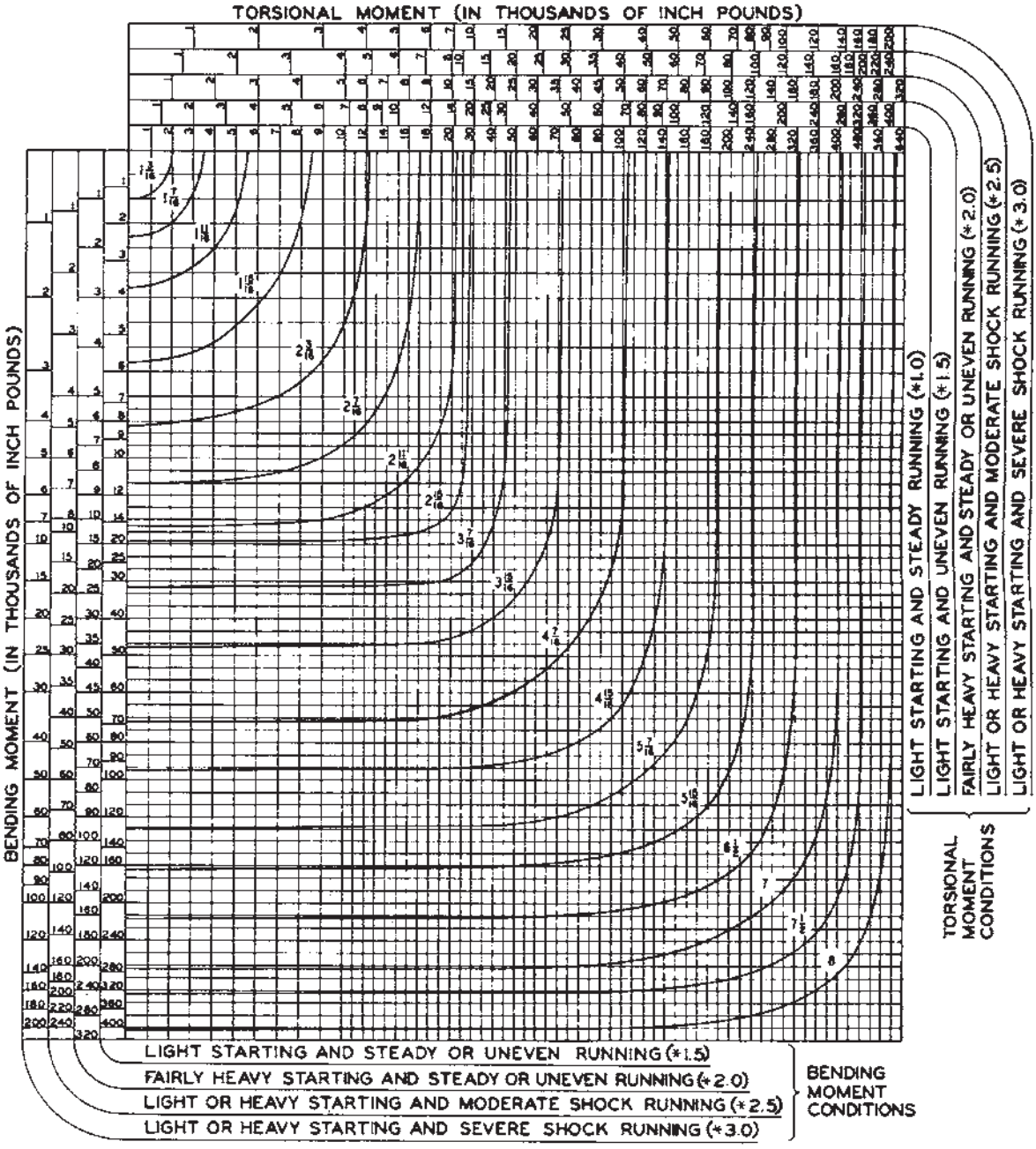

Example: Engine extension shaft driving single cylinder compressor, 15,000 pound-inches torsional moment, 14,000 pound- inches bending moment. Because of the heavy shock running load conditions use scales designated “Light or Heavy Starting and Severe Shock Running”. Project a line down from 15,000 torsional moment. Project a line to the right from 14,000 bending moment. The two lines intersect between 3-7/16 and 3-15/ 16 curves. Use 3-15/16 standard shafting.

Note: The above chart is based on ASME approved standard ASA-B17C-1927 withdrawn in 1954. If the latest shaft selection analysis is required refer to ANSI/ASME B106.1M-1985.

Note: If considering use of other shafting material refer to “Selection of Shaft Diameters” on page B16-18.

Expansion of Shafting

Provision should be made to permit the free movement of shafting endwise due to temperature changes. One bearing should serve as an anchor bearing to locate the shaft endwise. All other bearings should permit the shaft to move freely endwise.

The anchor bearing is often located near an important wheel. On long shafts it should preferably be located near the center of the shaft to keep the expansion of the two ends to a minimum. If the anchor bearing is babbitted it should be fitted with collars. If it is an anti-friction bearing it should be of the non-expansion type, which is the designation of DODGE roller and ball bearings for use as anchor bearings.

All bearings on the shafting other than the anchor bearing should permit the shaft to move freely endwise. If babbitted there should be no thrust collars. If anti-friction these bearings should be of the expansion type.

Several shafts firmly fastened together expand as if one continuous shaft. An example of this is line shafting with flange couplings. If the expansion is considered excessive a long line shaft may be split into two or more sections, the sections being connected with expansion couplings.

Amount of Expansion to be provided for-

The amount of shaft expansion is given in Table 25 below. For example, with a 100°F temperature rise on a 150 ft. line shaft with the anchor bearing located 70 ft. from one end and 80 ft. from the other end the ends will move .529” and .605” respectively away from the anchor bearing. The structure supporting the bearings may also expand depending on heat exposure. Several cases follow:

Case 1- Bearings supported on steel structures, where the shaft and structure are exposed to the same temperatures, will expand at the same rate. Expansion allowance is usually not required. If the shaft is exposed to a higher temperature than the support, allowances should be made. For example, if the shaft temperature is expected to change 80°, and the temperature of the structure 60°, the resulting movement between shafting and support ends will be equivalent to a 20° change.

Case 2 - For bearings supported on wood, brick, or concrete walls, or on piers with foundations in the ground, the amount of expansion is usually considered negligible. Therefore, the full amount of shafting expansion as calculated in Table 25 below, may be accommodated.

Case 3 - Certain structural designs have built-in flexibility. Where this is the case, expansion type bearings are not necessary.

Case 4 - Short shafts with only two bearings are usually designed without compensation for expansion, if temperature variations are not excessive.

Advice on Expansion Problems-

DODGE power transmission engineers will gladly make recommendations concerning shaft expansion problems and the use of suitable bearings.

Table 25: Linear Expansion of Steel Shafting

Base on Expansion In Inches = 0.0000063 x 12 x Length in Feet x Temp. Increase in Degrees Fahrenheit

Length (Feet)	Temperature Increase-Degrees F.					Length (Feet)	Temperature Increase-Degrees F.				
	20°	40°	60°	80°	100°		20°	40°	60°	80°	100°
1	.0015	.0030	.0045	.0060	.0075	40	.060	.121	.181	.242	.302
2	.0030	.0060	.0091	.0121	.0151	45	.068	.136	.204	.272	.340
3	.0045	.0091	.0136	.0181	.0227	50	.076	.151	.227	.302	.378
4	.0060	.0121	.0181	.0242	.0302	55	.083	.166	.249	.333	.416
5	.0076	.0151	.0227	.0302	.0378	60	.091	.181	.272	.363	.454
6	.0091	.0181	.0272	.0363	.0454	65	.098	.197	.295	.393	.491
7	.0106	.0212	.0318	.0423	.0529	70	.106	.212	.317	.423	.529
8	.0121	.0242	.0363	.0484	.0605	75	.113	.227	.340	.454	.567
9	.0136	.0272	.0408	.0544	.0680	80	.121	.242	.363	.484	.605
10	.0151	.0302	.0454	.0605	.0756	85	.129	.257	.386	.514	.643
12	.0181	.0363	.0544	.0726	.0907	90	.136	.272	.408	.544	.680
14	.0212	.0423	.0635	.0847	.1058	95	.144	.287	.431	.575	.718
16	.024	.048	.073	.097	.121	100	.151	.302	.454	.605	.756
18	.027	.054	.082	.109	.136	110	.166	.333	.499	.665	.832
20	.030	.060	.091	.121	.151	120	.181	.363	.544	.726	.907
25	.038	.076	.113	.151	.189	130	.197	.393	.590	.786	.983
30	.045	.091	.136	.181	.227	140	.212	.423	.635	.847	1.058
35	.053	.106	.158	.212	.265	150	.227	.454	.680	.907	1.134

DODGE®

ENGINEERING

Weights and Properties of Steel Shafting

Table 26: Weight of Round Steel Shafting

Shaft Size	Weight of Shafting for Various Lengths in feet																	Weight Per Inc.
	1	2	3	4	5	6	7	8	9	10	12	14	16	18	20	22	24	
3/4	1.50	3.00	4.50	6.00	7.50	9.00	10.50	12.00	13.50	15.00	18.00	21.00	24.00	27.00	30.00	33.00	36.00	.125
7/8	2.00	4.00	6.10	8.10	10.20	12.20	14.30	16.30	18.40	20.00	25.00	29.00	33.00	37.00	41.00	45.00	49.00	.170
*15/16	2.30	4.70	7.00	9.40	11.70	14.10	16.50	18.80	21.20	23.00	28.00	33.00	38.00	42.00	47.00	52.00	56.00	.195
1	2.70	5.30	8.00	10.60	13.30	16.00	18.60	21.30	24.00	27.00	32.00	37.00	43.00	48.00	53.00	59.00	64.00	.223
1-1/8	3.40	6.80	10.00	13.40	16.70	20.10	23.40	26.70	30.10	34.00	41.00	47.00	54.00	61.00	68.00	74.00	81.00	.281
*1-3/16	3.80	7.60	11.30	15.10	18.90	22.60	26.40	30.10	34.00	38.00	45.00	53.00	60.00	68.00	75.00	83.00	90.00	.314
1-1/4	4.20	8.30	12.50	16.70	20.80	25.00	29.20	33.30	37.50	42.00	50.00	58.00	67.00	75.00	83.00	92.00	100	.348
1-3/8	5.00	10.10	15.30	20.20	25.30	30.30	35.40	40.40	45.40	50.00	60.00	71.00	81.00	91.00	101	111	121	.420
*1-7/16	5.50	11.00	17.00	22.00	28.00	33.00	39.00	44.00	50.00	55.00	66.00	77.00	88.00	99.00	110	121	133	.460
1-1/2	6.00	12.00	18.00	24.00	30.00	36.00	42.00	48.00	54.00	60.00	72.00	84.00	96.00	108	120	132	144	.500
*1-11/16	7.60	15.00	23.00	30.00	38.00	46.00	53.00	61.00	68.00	76.00	91.00	107	122	137	152	167	183	.634
*1-15/16	10.00	20.00	30.00	40.00	50.00	60.00	70.00	80.00	90.00	100	120	140	161	181	201	221	241	.835
2	10.70	21.00	32.00	43.00	53.00	64.00	75.00	85.00	96.00	107	128	150	171	192	214	235	256	.890
*2-3/16	12.80	26.00	38.00	51.00	64.00	77.00	90.00	102	115	128	153	179	205	230	256	281	307	1.06
*2-7/16	15.90	32.00	48.00	63.00	79.00	95.00	111	127	143	159	190	222	254	286	317	349	381	1.32
2-1/2	16.70	34.00	50.00	67.00	83.00	100	117	134	150	167	200	234	267	301	334	367	401	1.39
*2-11/16	19.30	39.00	58.00	77.00	97.00	116	135	154	174	193	232	270	309	348	386	425	463	1.61
*2-15/16	23.00	46.00	69.00	92.00	115	138	161	184	208	231	277	323	369	415	461	507	553	1.92
*3-7/16	31.60	63.00	95.00	126	158	189	221	253	284	316	379	442	505	568	631	695	758	2.63
*3-15/16	41.40	83.00	124	166	207	248	290	331	373	414	497	580	662	745	828	911	994	3.45
*4-7/16	52.60	105	158	210	263	315	368	421	473	526	631	736	841	946	1052	1157	1262	4.38
*4-15/6	65.10	130	195	260	326	391	456	521	586	651	781	911	1041	1172	1302	1432	1562	5.42
*5-7/16	79.00	158	237	316	395	474	553	632	711	790	947	1105	1263	1421	1579	1737	1894	6.58
*6	96.00	192	288	384	481	577	673	769	865	961	1154	1346	1538	1730	1923	2115	2307	8.01

* **Recommended Diameters** These shaft diameters are recommended for use whenever possible as various transmission items such as couplings, collars, clutches, pulleys, etc., are carried in stock in these sizes, at least up to 3-15/16", in the principal cities throughout the United States.

Table 27: Weight and Properties of Round Steel Shafting

Shaft Size	Weight per Inch	Section Modulus		Moment of Inertia		Shaft Size	Weight per Inch	Section Modulus		Moment of Inertia	
		Bending	Torsion	Bending	Torsion			Bending	Torsion	Bending	Torsion
1/16	.00087	.000024	.000048	.000001	.000002	2-7/16	1.32	1.422	2.844	1.733	3.466
1/8	.0035	.000192	.000383	.000012	.000024	2-1/2	1.39	1.534	3.068	1.918	3.835
3/16	.0078	.000647	.001294	.000061	.000121	2-9/16	1.46	1.652	3.304	2.117	4.233
1/4	.0139	.001534	.003068	.000192	.000383	2-5/8	1.53	1.776	3.552	2.331	4.661
5/16	.0217	.002996	.005992	.000468	.000936	2-11/16	1.61	1.906	3.811	2.561	5.122
3/8	.0313	.005177	.010354	.000971	.001941	2-3/4	1.68	2.042	4.084	2.807	5.615
7/16	.0425	.008221	.016442	.001798	.003597	2-13/16	1.76	2.184	4.368	3.071	6.143
1/2	.0556	.0123	.0245	.0031	.0061	2-7/8	1.84	2.333	4.666	3.354	6.707
9/16	.0703	.0175	.0349	.0049	.0098	2-15/16	1.92	2.489	4.977	3.655	7.310
5/8	.0868	.0240	.0479	.0075	.0150	3	2.00	2.651	5.301	3.976	7.952
11/16	.1051	.0319	.0638	.0110	.0219	3-1/16	2.08	2.820	5.640	4.318	8.636
3/4	.125	.0414	.0828	.0155	.0311	3-1/8	2.17	2.996	5.992	4.681	9.363
13/16	.1467	.0527	.1053	.0214	.0428	3-3/16	2.26	3.179	6.359	5.067	10.13
7/8	.1701	.0658	.1315	.0288	.0575	3-1/4	2.35	3.370	6.740	5.477	10.95
15/16	.1954	.0809	.1618	.0379	.0758	3-5/16	2.44	3.568	7.137	5.910	11.82
1	.22	.0982	.1963	.0491	.0982	3-3/8	2.53	3.774	7.548	6.369	12.74
1-1/16	.25	.1178	.2355	.0626	.1251	3-7/16	2.63	3.988	7.976	6.854	13.71
1-1/8	.28	.1398	.2796	.0786	.1573	3-1/2	2.72	4.209	8.419	7.366	14.73
1-3/16	.31	.1644	.3288	.0976	.1952	3-9/16	2.82	4.439	8.878	7.907	15.81
1-1/4	.35	.1917	.3835	.1198	.2397	3-5/8	2.92	4.677	9.353	8.476	16.95
1-5/16	.38	.2220	.4439	.1457	.2913	3-11/16	3.02	4.923	9.845	9.076	18.15
1-3/8	.42	.2552	.5104	.1755	.3509	3-3/4	3.13	5.177	10.35	9.707	19.41
1-7/16	.46	.2916	.5832	.2096	.4192	3-13/16	3.23	5.440	10.88	10.37	20.74
1-1/2	.50	.3313	.6627	.2485	.4970	3-7/8	3.34	5.712	11.42	11.07	22.14
1-9/16	.54	.3745	.7490	.2926	.5852	3-15/16	3.45	5.993	11.99	11.80	23.60
1-5/8	.59	.4213	.8425	.3423	.6846	4	3.56	6.283	12.57	12.57	25.13
1-11/16	.63	.4718	.9435	.3981	.7961	4-1/16	3.67	6.582	13.16	13.37	26.74
1-3/4	.68	.5262	1.052	.4604	.9208	4-1/8	3.78	6.891	13.78	14.21	28.42
1-13/16	.73	.5846	1.169	.5298	1.060	4-3/16	3.90	7.209	14.42	15.09	30.19
1-7/8	.78	.6471	1.294	.6067	1.213	4-1/4	4.01	7.536	15.07	16.01	32.03
1-15/16	.83	.7140	1.428	.6917	1.384	4-5/16	4.13	7.874	15.75	16.98	33.96
2	.89	.7854	1.571	.7854	1.571	4-3/8	4.25	8.221	16.44	17.98	35.97
2-1/16	.94	.8614	1.723	.8883	1.777	4-7/16	4.38	8.579	17.16	19.03	38.07
2-1/8	1.00	.9421	1.884	1.001	2.002	4-1/2	4.50	8.946	17.89	20.13	40.26
2-3/16	1.06	1.028	2.055	1.124	2.248	4-9/16	4.63	9.324	18.65	21.27	42.54
2-1/4	1.13	1.118	2.237	1.258	2.516	4-5/8	4.75	9.713	19.43	22.46	44.92
2-5/16	1.19	1.214	2.428	1.404	2.808	4-11/16	4.88	10.11	20.22	23.70	47.40
2-3/8	1.25	1.315	2.630	1.562	3.124	4-3/4	5.01	10.52	21.04	24.99	49.98

Weights and Properties of Steel Shafting (Continued)

Table 28: Weight and Properties of Round Steel Shafting

Shaft Size	Weight per Inch	Section Modulus		Moment of Inertia		Shaft Size	Weight per Inch	Section Modulus		Moment of Inertia	
		Bending	Torsion	Bending	Torsion			Bending	Torsion	Bending	Torsion
4-13/16	5.15	10.94	21.88	26.33	52.66	13-1/2	40.50	241.50	483.10	1630	3261
4-7/8	5.28	11.37	22.75	27.72	55.45	13-3/4	42.00	255.20	510.40	1755	3509
4-15/16	5.42	11.82	23.63	29.17	58.35	14	43.60	269.40	538.80	1886	3771
5	5.56	12.27	24.54	30.68	61.36	14-1/4	45.10	284.10	568.20	2024	4048
5-1/16	5.70	12.74	25.48	32.24	64.49	14-1/2	46.70	299.30	598.60	2170	4340
5-1/8	5.84	13.22	26.43	33.86	67.73	14-3/4	48.40	315.00	630.10	2324	4647
5-3/16	5.98	13.70	27.41	35.55	71.09	15	50.00	331.30	662.70	2485	4970
5-1/4	6.13	14.21	28.41	37.29	74.58	15-1/4	51.70	348.20	696.40	2655	5310
5-5/16	6.27	14.72	29.44	39.10	78.20	15-1/2	53.40	365.60	731.20	2833	5667
5-3/8	6.42	15.25	30.49	40.97	81.94	15-3/4	55.10	383.60	767.10	3021	6041
5-7/16	6.58	15.78	31.57	42.91	85.82	16	56.90	402.10	804.20	3217	6434
5-1/2	6.72	16.33	32.67	44.92	89.84	16-1/4	58.70	421.30	842.50	3422	6846
5-9/16	6.88	16.90	33.79	46.99	93.99	16-1/2	60.50	441.00	882.00	3638	7277
5-5/8	7.03	17.47	34.95	49.14	98.29	16-3/4	62.40	461.40	922.70	3864	7728
5-11/16	7.19	18.06	36.12	51.36	102.70	17	64.20	482.30	964.70	4100	8200
5-3/4	7.35	18.66	37.33	53.66	107.30	17-1/4	66.10	503.90	1008	4346	8693
5-13/16	7.51	19.28	38.56	56.03	112.10	17-1/2	68.10	526.20	1052	4604	9208
5-7/8	7.67	19.91	39.82	58.48	117.00	17-3/4	70.00	549.10	1098	4873	9745
5-15/16	7.84	20.55	41.10	61.01	122.00	18	72.00	572.60	1145	5153	10306
6	8.00	21.21	42.41	63.62	127.20	18-1/4	74.00	596.70	1193	5445	10891
6-1/16	8.17	21.88	43.75	66.31	132.60	18-1/2	76.10	621.60	1243	5750	11500
6-1/8	8.34	22.56	45.12	69.09	138.20	18-3/4	78.10	647.10	1294	6067	12134
6-3/16	8.51	23.26	46.51	71.95	143.90	19	80.20	673.40	1347	6397	12794
6-1/4	8.68	23.97	47.94	74.90	149.80	19-1/4	82.40	700.30	1401	6741	13481
6-5/16	8.86	24.69	49.39	77.94	155.90	19-1/2	84.50	728.00	1456	7098	14195
6-3/8	9.03	25.44	50.87	81.08	162.20	19-3/4	86.70	756.30	1513	7469	14937
6-7/16	9.21	26.19	52.38	84.30	168.60	20	88.90	785.40	1571	7854	15708
6-1/2	9.39	26.96	53.92	87.62	175.20	20-1/4	91.10	815.20	1630	8254	16508
6-5/8	9.76	28.55	57.09	94.56	189.10	20-1/2	93.40	845.80	1692	8669	17339
6-3/4	10.10	30.19	60.39	101.90	203.80	20-3/4	95.70	877.10	1754	9100	18200
6-7/8	10.50	31.90	63.80	109.70	219.30	21	98.00	909.20	1818	9547	19093
7	10.90	33:67	67.35	117.90	235.70	21-1/4	100.40	942.10	1884	10009	20019
7-1/8	11.30	35.51	71.02	126.50	253.00	21-1/2	102.70	975.70	1951	10489	20978
7-1/4	11.70	37.41	74.82	135.60	271.20	21-3/4	105.10	1010	2020	10985	21970
7-3/8	12.10	39.38	78.76	145.20	290.40	22	107.60	1045	2091	11499	22998
7-1/2	12.50	41.42	82.84	155.30	310.60	22-1/4	110.00	1081	2163	12031	24061
7-5/8	12.90	43.52	87.05	165.90	331.90	22-1/2	112.50	1118	2237	12581	25161
7-3/4	13.30	45.70	91.40	177.10	354.20	22-3/4	115.00	1156	2312	13149	26298
7-7/8	13.80	47.95	95.89	188.80	377.60	23	117.60	1194	2389	13737	27473
8	14.30	50.27	100.50	201.10	402.10	23-1/4	120.10	1234	2468	14344	28687
8-1/8	14.70	52.66	105.30	213.90	427.90	23-1/2	122.70	1274	2548	14971	29941
8-1/4	15.10	55.13	110.30	227.40	454.80	23-3/4	125.40	1315	2630	15618	31236
8-3/8	15.60	57.67	115.30	241.50	483.00	24	128.00	1357	2714	16286	32572
8-1/2	16.10	60.29	120.60	256.20	512.50	24-1/4	130.70	1400	2800	16975	33951
8-5/8	16.50	62.99	126.00	271.60	543.30	24-1/2	133.40	1444	2888	17686	35372
8-3/4	17.00	65.77	131.60	287.70	575.50	24-1/4	136.20	1488	2977	18419	36838
8-7/8	17.50	68.63	137.30	304.50	609.10	25	138.90	1534	3068	19175	38350
9	18.00	71.57	143.10	322.10	644.10	25-1/4	141.70	1580	3161	19954	39907
9-1/8	18.50	74.59	149.20	340.30	680.70	25-1/2	144.50	1628	3256	20755	41511
9-1/4	19.00	77.70	155.40	359.40	718.70	25-3/4	147.40	1676	3352	21581	43163
9-3/8	19.50	80.89	161.80	379.20	758.40	26	150.30	1726	3451	22432	44864
9-1/2	20.10	84.17	168.30	399.80	799.60	26-1/4	153.20	1776	3552	23307	46614
9-5/8	20.60	87.54	175.10	421.30	842.60	26-1/2	156.10	1827	3654	24208	48415
9-3/4	21.10	90.99	182.00	443.60	887.20	26-3/4	159.00	1879	3758	25134	50268
9-7/8	21.70	94.54	189.10	466.80	933.60	27	162.00	1932	3865	26087	52174
10	22.20	98.17	196.30	490.90	981.70	27-1/2	168.10	2042	4083	28074	56148
10-1/4	23.40	105.72	211.40	541.80	1084	28	174.30	2155	4310	30172	60344
10-1/2	24.50	113.65	227.30	596.70	1193	28-1/2	180.50	2273	4545	32385	64771
10-3/4	25.70	121.96	243.90	655.50	1311	29	186.90	2394	4789	34719	69437
11	26.90	130.67	261.30	718.70	1437	29-1/2	193.40	2520	5041	37176	74351
11-1/4	28.10	139.78	279.60	786.30	1573	30	200.00	2651	5301	39761	79522
11-1/2	29.40	149.31	298.60	858.50	1717	30-1/2	206.80	2785	5571	42479	84957
11-3/4	30.70	159.26	318.50	935.70	1871	31	213.60	2925	5849	45333	90666
12	32.00	169.65	339.30	1018	2036	31-1/2	220.50	3069	6137	48329	96659
12-1/4	33.40	180.47	360.90	1105	2211	32	227.60	3217	6434	51472	102944
12-1/2	34.70	191.75	383.50	1198	2397	32-1/2	234.80	3370	6740	54765	109530
12-3/4	36.10	203.48	407.00	1297	2594	33	242.10	3528	7056	58214	116428
13	37.60	215.69	431.40	1402	2804	34	256.90	3859	7717	65597	131194
13-1/4	39.00	228.37	456.70	1513	3026	35	272.30	4209	8418	73662	147324

Viscosity Classification Equivalents

OIL VISCOSITY EQUIVALENCY CHART

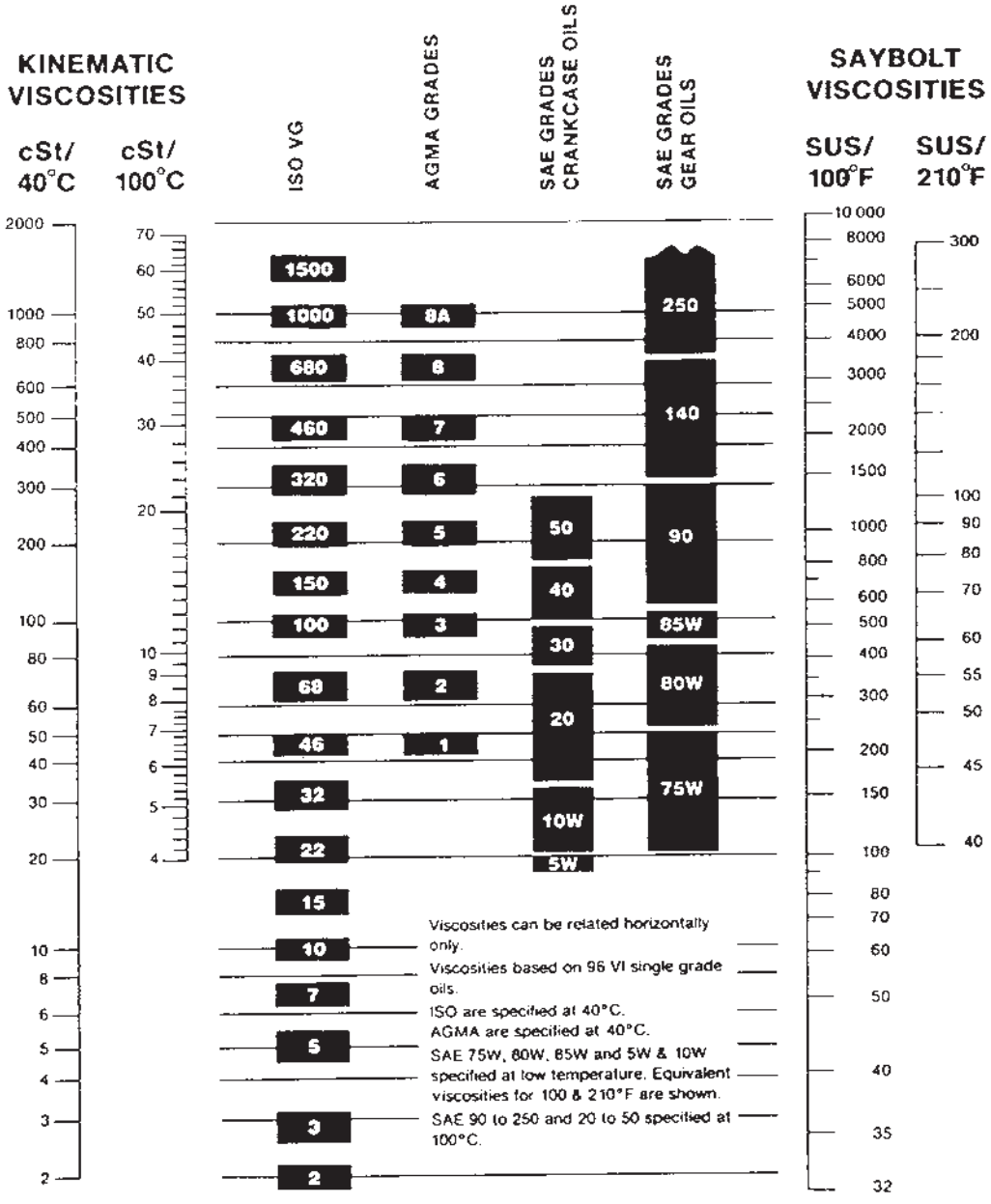

ISO VISCOSITY CLASSIFICATION SYSTEM

All industrial oils are graded according to the ISO Viscosity Classification System, approved by the International Standards Organizations (ISO). Each ISO viscosity grade number corresponds to the mid-point of viscosity range expressed in centistokes (cSt) at 40°C. For example, a lubricant with an ISO grade of 32 has a viscosity within the range of 28.80-35.2, the midpoint of which is 32.

Rule-of-Thumb: The comparable ISO grade of a competitive product whose viscosity in SUS at 100°F is known can be determined by using the following conversion formula:

SUS @ 100° F ÷ 5 = cSt @ 40°C

English Standard Measures

Long Measure

1 mile = 1760 yards = 5280 feet.
1 yard = 3 feet = 36 inches.
1 foot = 12 inches.

Surveyor's Measure

1 mile = 8 furlongs = 80 chains.
1 furlong = 10 chains = 220 yards.
1 chain = 4 rods = 22 yards = 66 feet = 100 links.
1 link = 7.92 inches.

Square Measure

1 square mile = 640 acres = 6400 square chains.
1 acre = 10 square chains = 4840 square yards = 43,560 square feet.
1 square chain = 16 square rods = 484 square yards = 4356 square feet.
1 square rod = 30.25 square yards = 272.25 square feet = 625 square links.
1 square yard = 9 square feet.
1 square foot = 144 square inches.
An acre is equal to a square, the side of which is 208.7 feet.

Dry Measure

1 bushel (U.S. or Winchester struck bushel) = 1.2445 cubic foot = 2150.42 cubic inches.
1 bushel = 4 pecks = 32 quarts = 64 pints.
1 peck = 8 quarts = 16 pints.
1 quart = 2 pints.
1 heaped bushel = 1 1/4 struck bushel.
1 cubic foot = 0.8036 struck bushel.
1 British Imperial bushel=8 Imperial gallons=1.2837 cubic foot = 2218.19 cubic inches.

Liquid Measure

1 U.S. gallon = 0.1337 cubic foot = 231 cubic inches = 4 quarts = 8 pints.
1 quart = 2 pints = 8 gills.
1 pint = 4 gills.
1 British Imperial gallon = 1.2003 U.S. gallon = 277.27 cubic inches.
1 cubic foot = 7.48 U.S. gallons.

Circular and Angular Measure

60 seconds (")	=1 minute (')
60 minutes	=1 degree (-)
360 degrees	=1 circumference (C)
57.3 degrees	=1 radian
2 π radians	=1 circumference (C)

Specific Gravity

The specific gravity of a substance is its weight as compared with the weight of an equal bulk of pure water.

For making specific gravity determinations the temperature of the water is usually taken at 62° F. when 1 cubic foot of water weighs 62.355 lbs. Water is at its greatest density at 39.20° F. or 4° Centigrade.

Temperature

The following equation will be found convenient for transforming temperature from one system to another:

Let F = degrees Fahrenheit; C = degrees Centigrade; R = degrees Reamur.

$$\frac{F-32}{180} = \frac{C}{100} = \frac{R}{80}$$

Avoirdupois or Commercial Weight

1 gross or long ton = 2240 pounds.
1 net or short ton = 2000 pounds.
1 pound = 16 ounces = 7000 grains.
1 ounce = 16 drams = 437.5 grains.

Measures of Pressure

1 pound per square inch = 144 pounds per square foot = 0.068 atmosphere = 2.042 inches of mercury at 62 degrees F. = 27.7 inches of water at 62 degrees F. = 2.31 feet of water at 62 degrees F.

1 atmosphere = 30 inches of mercury at 62 degrees F. = 14.7 pounds per square inch = 2116.3 pounds per square foot = 33.95 feet of water at 62 degrees F.

1 foot of water at 62 degrees F. = 62.355 pounds per square foot = 0.433 pound per square inch.

1 inch of mercury at 62 degrees F. = 1.132 foot of water = 13.58 inches of water = 0.491 pound per square inch.

Column of water 12 in. high, 1 in. dia. = .341 lbs.

Cubic Measure

1 cubic yard = 27 cubic feet.
1 cubic foot = 1728 cubic inches.
The following measures are also used for wood and masonry:
1 cord of wood = 4 X 4 X 8 feet = 128 cubic feet.
1 perch of masonry = 16-1/2 X 1-1/2 X 1 foot = 24-3/4 cubic feet.

Shipping Measure

For measuring entire internal capacity of a vessel: 1 register ton = 100 cubic feet.
For measurement of cargo:
1 U.S. shipping ton = 40 cubic feet = 32.143 U.S. bushels = 31.16 Imperial bushels.
British shipping ton = 42 cubic feet = 33.75 U.S. bushels = 32.72 Imperial bushels.

Troy Weight, Used for Weighing Gold and Silver

1 pound = 12 ounces = 5760 grains.
1 ounce = 20 pennyweights = 480 grains.
1 pennyweight = 24 grains.
1 carat (used in weighing diamonds) = 3.086 grains.
1 grain Troy = 1 grain avoirdupois = 1 grain apothecaries' weight.

Measure Used for Diameters and Areas of Electric Wires

1 circular inch = area of circle 1 inch in diameter = 0.7854 square inch.
1 circular inch = 1,000,000 circular mils.
1 square inch = 1.2732 circular inch = 1,273,239 circular mils.
A circular mil is the area of a circle 0.001 inch in diameter.

Board Measure

One foot board measure is a piece of wood 12 inches square by 1 inch thick, or 144 cubic inches. 1 cubic foot therefore equals 12 feet board measure

ENGINEERING

TABLE 29: Decimal and Millimeter Equivalents of Fractions

Inches Fractions		Inches Decimals	Millimeters	Inches Fractions		Inches Decimals	Millimeters	Inches Fractions		Inches Decimals	Millimeters
1/64		.015625	.397		11/32	.34375	8.7319		11/16	.6875	17.463
	1/32	.03125	.794	23/64		.359375	9.128	45/64		.703125	17.859
3/64		.046875	1.191		3/8	.375	9.525		23/32	.71875	18.256
	1/16	.0625	1.588	25/64		.390625	9.922	47/64		.734375	18.653
5/64		.078125	1.984		13/32	.40625	10.319		3/4	.750	19.050
	3/32	.09375	2.381	27/64		4.21875	10.716	49/64		.765625	19.447
7/64		.109375	2.778		7/16	4.375	11.113		25/32	.78125	19.844
	1/8	.125	3.175	29/64		4.53125	11.509	51/64		.796875	20.241
9/64		.140625	3.582		15/32	.46875	11.906		13/16	.8125	20.638
	5/32	.15625	3.969	31/64		.48376	12.303	53/64		.828125	21.034
11/64		.171875	4.366		1/2	.500	12.700		27/32	.84375	21.431
	3/16	.1875	4.763	33/64		.515625	13.097	55/64		.859375	21.828
13/64		.203125	5.159		17/32	.53125	13.494		7/8	.875	22.225
	7/32	.21875	5.556	35/64		.546875	13.891	57/64		.890625	22.622
15/64		.234375	5.953		9/16	.5625	14.288		29/32	.90524	23.019
	1/41	.250	6.350	37/64		.578125	14.684	59/64		.921875	23.416
7/64		.265625	6.747		19/32	.59375	14.081		15/16	.9375	23.813
	9/32	.28125	7.144	39/64		.609375	15.478	61/64		.953125	24.209
19/64		.296875	7.541		5/8	.625	15.875		31/32	.96875	24.606
	5/16	.3125	7.938	41/64		.60625	16.272	63/64		.984375	25.003
21/64		.328125	8.334		21/32	.65625	16.669		1	1.000	25.400
				43/64		.671875	17.066				

Table 30: Millimeter-Inch Equivalents: 1” = 25.4mm (.03937” = 1mm)

Millimeter	Decimal	Millimeter	Decimal	Millimeter	Decimal	Millimeter	Decimal	Millimeter	Decimal
1	.03937	52	2.04724	103	4.05511	154	6.06299	205	8.07086
2	.07874	53	2.08661	104	4.09448	155	6.10236	206	8.11023
3	.11811	54	2.12598	105	4.13385	156	6.14173	207	8.14960
4	.15748	55	2.16535	106	4.17322	157	6.18110	208	8.18897
5	.19685	56	2.20472	107	4.21259	158	6.22047	209	8.22834
6	.23622	57	2.24409	108	4.25196	159	6.25984	210	8.26771
7	.27559	58	2.28346	109	4.29133	160	6.29921	211	8.30708
8	.31496	59	2.32283	110	4.33070	161	6.33858	212	8.34645
9	.35433	60	2.36220	111	4.37007	162	6.37795	213	8.38582
10	.39370	61	2.40157	112	4.40944	163	6.41732	214	8.42519
11	.43307	62	2.44094	113	4.44881	164	6.45669	215	8.46456
12	.47244	63	2.48031	114	4.48818	165	6.49606	216	8.50393
13	.51181	64	2.51968	115	4.52755	166	6.53543	217	8.54330
14	.55118	65	2.55905	116	4.56692	167	6.57480	218	8.58267
15	.59055	66	2.59842	117	4.60629	168	6.61417	219	8.62204
16	.62992	67	2.63779	118	4.64566	169	6.65354	220	8.66141
17	.66929	68	2.67716	119	4.68503	170	6.69291	221	8.70078
18	.70866	69	2.71653	120	4.72440	171	6.73228	222	8.74015
19	.74803	70	2.75590	121	4.76378	172	6.77165	223	8.77952
20	.78740	71	2.79527	122	4.80315	173	6.81102	224	8.81889
21	.82677	72	2.83464	123	4.84252	174	.685039	225	8.85826
22	.86614	73	2.87401	124	4.88189	175	6.88976	226	8.897.63
23	.90551	74	2.91338	125	4.92126	176	6.92913	227	8.93700
24	.94488	75	2.95275	126	4.96063	177	.696850	228	8.97637
25	.98425	76	2.99212	127	5.00000	178	7.00787	229	9.01574
26	1.02362	77	3.03149	128	5.03937	179	7.04724	230	9.05511
27	1.06299	78	3.07086	129	5.07875	180	7.08661	231	9.09448
28	1.10236	79	3.11023	130	5.11811	181	7.12598	232	9.13385
29	1.14173	80	3.14960	131	5.15749	182	7.16535	233	9.17322
30	1.18110	81	3.18897	132	5.19685	183	7.20472	234	9.21259
31	1.22047	82	3.22834	133	5.23622	184	7.24409	235	9.25196
32	1.25984	83	3.26771	134	5.27559	185	7.28346	236	9.29133
33	1.29921	84	.303708	135	5.31496	186	7.32283	237	9.33070
34	1.33858	85	3.34645	136	5.35433	187	7.36220	238	9.37007
35	1.37795	86	3.38582	137	5.39370	188	7.40157	239	9.40944
36	1.41732	87	.342519	138	.543307	189	7.44094	240	9.44881
37	1.45669	88	3.46456	139	.547244	190	7.48031	241	9.48818
38	1.49606	89	3.50393	140	5.51181	191	7.51968	242	9.52755
39	1.53543	90	3.54330	141	5.55118	192	7.55905	243	9.56692
40	1.57480	91	.358267	142	5.59055	193	7.59842	244	9.60629
41	1.61417	92	3.62204	143	5.62992	194	7.63779	245	9.64566
42	1.65354	93	3.66141	144	5.66929	195	7.67716	246	9.68503
43	1.69291	94	3.70078	145	5.70866	196	7.71653	247	9.72440
44	1.73228	95	3.74015	146	5.748.4	197	7.75590	248	9.76378
45	1.77165	96	3.77952	147	5.78740	198	7.79527	249	9.80315
46	1.81102	97	3.81899	148	5.82677	199	7.83464	250	9.84252
47	1.85039	98	3.85826	149	5.86614	200	7.87401	251	9.88189
48	1.88976	99	3.89763	150	5.90551	201	7.91338	252	9.92126
49	1.92913	100	3.93710	151	5.94488	202	795275	253	9.96063
50	1.96850	101	3.97637	152	5.98425	203	799221	254	10.00000
51	2.00787	102	4.01574	153	6.02362	204	8.03149	-	-

Metric System of Measurements

Measures of Length

10	millimeters (mm.)	=	1 centimeter (cm.)
10	centimeters	=	1 decimeter (dm.)
10	decimeters	=	1 meter (m.)
1000	meter	=	1 kilometer (km.)

Measure of Weight

10	milligrams (mg.)	=	1 centigram (cg.)
10	centigrams	=	1 decigram (dg.)
10	decigrams	=	1 gram (g.)
10	grams	=	1 decagram (Dg.)
10	decagrams	=	1 hectogram (Hg.)
10	hectograms	=	1 Kilogram (Kg.)
1000	kilograms	=	1 (metric) ton (T.)

Surveyor's Square Measure

100	square meters (m.2)	=	1 are (ar.)
100	acres	=	1 hectare (har.)
100	hectares	=	1 sq. kilometer (Km.2)

Square Measure

100	sq. millimeters (mm.2)	=	1 sq. centimeter (cm.2)
100	sq. centimeters	=	1 sq. decimeter (dm.2)
100	sq. decimeters	=	1 sq. meter (m.2)

Cubic Measure

1000	cu. millimeters (mm.3)	=	1 cu. centimeter (cm.3)
1000	cu. centimeters	=	1 cu. decimeter (dm.3)
1000	cu. decimeters	=	1 cu. meter (m.3)

Dry and Liquid Measure

10	milliliters (ml.)	=	1 centiliter (cl.)
10	centiliters	=	1 deciliter (dl.)
10	deciliters	=	1 liter (l.)
100	liters	=	1 hectoliter (Hl.)

1 liter = 1 cubic decimeter = the volume of 1 kilogram of pure water at a temperature of 39.2 degrees F.

Metric System of Measurements (Continued)

Length Conversion Constants for Metric and U.S. Units

Millimeters X.039370 = inches.	Inches X 25.4001 = millimeters.
Meters x 39.370 = inches.	Inches X.0254 = meters.
Meters X 3.2808 = feet.	Feet x.30480 = meters.
Meters X 1.09361 = yards.	Yards X.91440 = meters.
Kilometers X 3,280.8 = feet.	Feet x.0003048 = kilometers.
Kilometers X.62137 = Statute Miles.	Statute Miles X 1.60935 = kilometers.
Kilometers x.53959 = Nautical Miles.	Nautical Miles x 1.85325 = kilometers.

Weight Conversion Constants for Metric and U.S. Units

Grams X 981 = dynes.	Dynes X.0010193 = grams.
Grams X 15.432 = grains.	Grains X.0648 = grams.
Grams X.03527 = ounces (Avd.).	Ounces (Avd.) X 28.35 = grams.
Grams x.033818 = fluid ounces (water).	Fluid Ounces (Water) X 29.57 = grams.
Kilograms X 35.27 = ounces (Avd.).	Ounces (Avd.) X.02835 = kilograms.
Kilograms X 2.20462 = pounds (Avd.).	Pounds (Avd.) X.45359 = kilograms.
Metric Tons (1000 Kg.) X 1.10231 = Net Ton (2000 lbs.).	Net Ton (2000 lbs.) X.90719 = Metric Tons (1000 Kg.).
Metric Tons (1000 Kg.) X.98421 = Gross Ton (2240 lbs.).	Gross Ton (2240 lbs.) X 1.01605 = Metric Tons (1000 Kg.).

Area Conversion Constants for Metric and U.S. Units

Square Millimeters X.00155 = square inches.	Square Inches X 645.163 = square millimeters.
Square centimeters X.155 = square inches.	Square Inches x 6.45163 = square centimeters.
Square Meters X 10.76387 = square feet.	Square Feet x.0929 = square meters.
Square Meters X 1.19599 = square yards.	Square Yards X.83613 = square meters.
Hectares X 2.47104 = acres.	Acres X.40469 = hectares.
Square Kilometers X 247.104 = acres.	Acres X.0040469 = square kilometers.
Square Kilometers X.3861 = square miles.	Square Miles X 2.5899 = square kilometers.

Volume Conversion Constants for Metric and U.S. Units

Cubic centimeters X.033818 = fluid ounces.	Fluid Ounces X 29.57 = cubic centimeters.
Cubic centimeters X.061023 = cubic inches.	Cubic Inches X 16.387 = cubic centimeters.
Cubic centimeters X.271 = fluid drams.	Fluid Drams x 3.69 = cubic centimeters.
Liters X 61.023 = cubic inches.	Cubic Inches X.016387 = liters.
Liters X 1.05668 = quarts.	Quarts x.94636 = liters.
Liters X .26417 = gallons.	Gallons x 3.78543 = liters.
Liters X.035317 = cubic feet.	Cubic Feet x 28.316 = liters.
Hectoliters X 26.417 = gallons.	Gallons x.0378543 = hectoliters.
Hectoliters X 3.5317 = cubic feet.	Cubic Feet x.28316 = hectoliters.
Hectoliters X 2.83794 = bushel (2150.42 cu. in.).	Bushels (2150.42 cu. in.) X.352379 = hectoliters.
Hectoliters X.1308 = cubic yards.	Cubic Yards x 7.645 = hectoliters.
Cubic Meters x 264.17 = gallons.	Gallons x.00378543 = cubic meters.
Cubic Meters x 35.317 = cubic feet.	Cubic Feet x.028316 = cubic meters.
Cubic Meters X 1.308 = cubic yards.	Cubic Yards x.7645 = cubic meters.

Power and Heat Conversion Constants for Metric and U.S. Units

Calorie x 0.003968 = B.T.U.	B.T.U. X 252 = calories.
Joules X.7373 = pound-feet.	Pound-Feet X 1.3563 = joules.
Newton-Meters X 8.851 = pound-inches	Pound-inches X.11298 = Newton-meters.
Cheval Vapeur X.9863 = Horsepower.	Horsepower X 1.014 = Cheval Vapeur.
Kilowatts X 1.34 = Horsepower.	Horsepower X.746 = kilowatts.
Kilowatt Hours X 3415 = B.T.U.	B.T.U. X.00029282 = kilowatt hours.
(Degrees Cent. X 1.8) +32 = degrees Fahr.	(Degrees Fahr. - 32) x.555 = degrees Cent.
(Degrees Reamur X 2.25) + 32 = degrees Fahr.	(Degrees Fahr. - 32) x.444 = degrees Reamur.

COMMON CONVERSION FACTORS USEFUL IN MECHANICAL POWER TRANSMISSION

Symbols and Abbreviations Used in Conversion Factors

Symbols and abbreviations found in this section are those currently used in many texts and product publications. Considerable effort is underway to standardize on abbreviations for metric and English units of measurement. Recently, ASTM (American Society for Testing and Materials) and IEEE (Institute of Electrical and Electronic Engineers) published a standard practice on the metric system. † This publication consolidates a great deal of the current thinking and provides a system of abbreviations and symbols that differ somewhat from those used here.

This Handbook has retained use of familiar abbreviations consistent with existing product and trade literature rather than the abbreviations found in current publications of technical and scientific societies.

Prefixes Used in the Metric System

Common prefixes and symbols used in the metric system are listed below. An example of use is 1000 meters is equivalent to 1 kilometer, and 1/1000 of one meter is equivalent to 1 millimeter.

Prefix	Symbol	Multiplication Factor-Decimal and Power of 10
exa	E	1,000,000,000,000,000,000 or 10^{18} or one quintillion
peta	P	1,000,000,000,000,000 or 10^{15} or one quadrillion
tera	T	1,000,000,000,000 or 10^{12} or one trillion
giga	G	1,000,000,000 or 10^{9} or one billion
mega	M	1,000,000 or 10^{6} or one million
kilo	k	1,000 or 10^{3} or one thousand
*hecto	h	100 or 10^{2} or one hundred
*deka	da	10 or 10^{1} or ten
**deci	d	0.1 or 10^{-1} or one tenth
**centi	c	0.01 or 10^{-2} or one hundredth
mill	m	0.001 or 10^{-3} or one thousandth
micro	μ	0.000,001 or 10^{-6} or one millionth
nano	n	0.000,000,001 or 10^{-9} or one billionth
pico	p	0.000,000,000,001 or 10^{-12} or one trillionth
femto	f	0.000,000,000,000,001 or 10^{-15} or one quadrillionth
atto	a	0.000,000,000,000,000,001 or 10^{-18} or one quintillionth

* Not commonly used.

** Not commonly used except for special situations.
The centimeter as a unit of length is in common use.
The decibel is a unit in both electrical and acoustical work.

† ASTM/IEEE Standard Metric Practice, ASTM E 380-75, IEEE Std. 268-1976.
"Reprinted with Permission of the Power Transmission Distributors Association"

Symbol or Abbreviation	Term
atm	atmosphere
avdp	avoirdupois
bbl	barrels
bu	bushels
C	degrees Centigrade or Celsius
cc	cubic centimeters
cfm	cubic feet per minute
cfs	cubic feet per second
cm	centimeter
cu	cubic
deg	degrees
F	degrees Fahrenheit
fps	feet per second
ft	feet
ft-lb	foot-pounds (work or energy)
ft per sec	feet per second (alternate)
ft per sec^2	feet per second per second
g	acceleration due to gravity
g	grams
gal	gallons
gpm	gallons per minute
hp	horsepower
hr	hour
in	inches
in-lb	inch-pounds (work or energy)
K	degrees Kelvin
kg	kilograms
km	kilometers
kn	knots
kW	kilowatts
l	liters
lb	pounds
lb-ft	pound-feet (torque)
m	meters
m per sec^2	meters per second per second
mi	miles
mm	millimeters
mph	miles per hour
MGD	millions of gallons per day
N	Newtons
oz	ounces
oz-in	ounce-inches (torque)
Pa	Pascals
psi	pounds per square inch
psia or psig	pounds per square inch "absolute" or gauge
pt	pint
qt	quart
R	degrees Rankine (Fahrenheit, absolute)
rad	radians
rev	revolutions
rpm	revolutions per minute
sec	seconds
sq	square
std	standard
temp	temperature
wt	weight
yd	yard
yr	year

Rounding of Numbers

A minimum of four significant figures are used in conversion factors presented here. Where the conversion factor is exact (for example, 1 foot contains 12 inches), decimal fractions are not necessary. Also, where large whole numbers are used (for example, 1 square kilometer contains 1195990 square yards), decimal fractions are not used unless justified by the accuracy of ordinary computations.

1195990	(sq yd in a sq km)
4389.12	(cc in a cu ft)
448.86	(gpm in a liter per sec)
14.70	(psi in an atmosphere)
0.4331	(psi in a ft of water)
0.0625	(lb-in in an oz-in)

ENGINEERING

VELOCITY

centimeters per second (cm per sec)	feet per second (fps or ft per sec)	0.3281
feet per second (fps)	centimeters per second (cm per sec)	30.48
	meters per second (m per sec)	0.3048
	kilometers per hour (km per hr)	1.097
	miles per hour (mph)	0.6818
kilometers per hour (km per hr)	knots (kn)	0.5396
	feet per second (fps)	1.467
	kilometers per hour (km per hr)	1.609
	feet per minute (ft per min.)	88
knots (kn)	miles per hour (mph)	1.152
	kilometers per hour (km per hr)	1.853
radians per second (rad per sec)	revolutions per minute (rpm)	9.55
	degrees per minute (deg per min.)	3437.7
revolutions per minute (rpm)	radians per second (rad per sec)	0.1047
	degrees per minute (deg per min.)	360

ACCELERATION

COLUMN A

To Convert From...	To...	Multiply Col. A by
feet per second per second (ft per sec^2)	meters per second per second (m per sec^2)	0.3048
m per sec^2	ft per sec^2	3.281
revolutions per minute per second (rpm per sec)	radians per second per second (rad per sec^2)	0.1047
rad per sec^2	rpm per sec	9.55

VOLUMETRIC FLOW RATES

gallons per minute, US (gpm)	liters per second (l per sec)	0.008434
	cubic feet per minute (cfm)	0.1337
	cubic feet per hour (cu ft per hr)	8.022
gallons per minute, UK or Canadian (gpm)	liters per second (l per sec)	0.0101
	cubic feet per minute (cfm)	0.1606
	cubic feet per hour (cu ft per hr)	9.634
cubic feet per second (cfs)	gpm (UK or Canadian)	373.77
	gpm (US)	448.86
	liters per second (l per sec)	1699.2
liters per second (l per sec)	cubic feet per minute (cfm)	2.119
	gpm (UK or Canadian)	13.20
	gpm (US)	15.85
millions of gallons per day, US (MGD)	liters per second (l per sec)	43.81
	cubic feet per minute (cfm)	92.85
	gallons per minute, US (gpm)	694.44

PRESSURE

pascals (Pa)	pounds per square inch (psi)	0.0001450
	pounds per square foot (lb per ft^2)	0.02089
	newtons per square meter	1
pounds per square inch (psi)	atmospheres, std. (atm)	0.0680
	pounds per square foot (lb per ft^2)	144
	pascals (Pa)	6894.8
	foot of water (ft of H20) 60F	2.301
atmospheres (atm), standard	psi	14.70
	lb per ft^2	2116.8
	Pa	101325
inch of water, 60F (in of H20)	psi	0.03609
	lb per ft^2	5.197
	Pa	248.84
foot of water, 60F (ft of H20)	psi	0.4331
	lb per ft^2	62.36
	Pa	2985.9

WEIGHT, MASS, INERTIA

pounds (lb)*	kilograms (kg)	0.4536
	ounces (oz)	16
kilograms (kg)	pounds (lb)	2.205
	ounces (oz)	35.27

WEIGHT, MASS, INERTIA, (Continued)

COLUMN A

Convert From	To	Multiply Col A By This Factor
tons (short)	metric tons	0.9072
	kilograms (kg)	907.2
	pounds (lb)	2000
metric tons	tons (short)	1.102
	kilograms	1000
	pounds	2205
pounds, weight (lb)	slugs, mass (lb-sec2 per ft)	0.03106
pound-foot2 (lb-ft2)	kilogram-meters2 (kg-m2)	0.04214

*pounds and ounces are avoirdupois

FORCE AND TORQUE

pounds (lb)	newtons(N)	4.448
newtons (N)	pounds (lb)	0.2248
newton-meters (N-m)	pound-feet (lb-ft)	0.7376
	pound-inches (lb-in)	8.851
	ounce-inches (oz-in)	141.60
ounce-inches (oz-in)	lb-ft.	0.005208
	N-m	0.007062
	lb-in	0.0625
pound-inches (lb-in)	lb-ft.	0.0833
	N-m	0.1298
	oz-ln	16
pound-feet (lb-ft)	N-m	1.356
	lb -in	12
	oz-ln	192

POWER

horsepower (hp)	kilowatts (kW)	0.7457
	foot-pounds per second (ft-lb per sec)	550
	foot-pounds per minute (ft-lb per min.)	33000
kilowatts (kW)	horsepower (hp)	1.341

TEMPERATURE

		Use This Relationship
degrees Fahrenheit (F)	degrees Celsius (C)	C =5/9 (F-32)
degrees Celsius (C)	degrees Fahrenheit (F)	F=9/5C+32
degrees Fahrenheit (F)	degrees Rankine (R)	R =F+459.69
degrees Celsius (C)	degrees Kelvin (K)	K=C+273.16

Examples:

1. Convert 12F to C. C = 5/9 (F-32) = 5/9 (12-32) = 5/9 (-20)
   Answer = -11.1C
2. Convert 40C to F. F = 9/5C + 32 = 9/5 (40) + 32 = 72 + 32
   Answer = 104F

GRAVITATIONAL CONSTANT

g = 32.174 feet per second per second (ft per sec2)
= 9.8067 meters per second per second (m per sec2)

APPROXIMATE DENSITIES OF COMMON MATERIALS

	REPRESENTATIVE DENSITIES	
	Grams per cc	lb per cu ft
GASES @ 68F, std atm		
Air	1.30 grams per liter	0.07528
Oxygen	1.45 grams per liter	0.08305
Hydrogen	0.09 grams per liter	0.005234
Nitrogen	1.25 grams per liter	0.07274
	All Other Materials grams per cc	
LIQUIDS		
Water @ 4C	1.000 grams per cc	62.43
20C	0.998	62.32
40C	0.992	61.94
SeaWater	1.02-1.03	64.00
Ethyl alcohol 100%	0.789	49.2
Kerosene	0.78-0.82	50
Gasoline	0.70-0.75	45
METALS		
Aluminum (95% Al)	2.70	169
Bronze (90% Cu, 10% Zn)	8.80	549
Copper (Annealed, ACS)	8.89	555
Gold	19.32	1206
Iron, gray cast	7.10	443
Lead	11.36	709
Magnesium	1.74	109
Steel (0.4-0.5% Carbon)	7.80	487
Steel, 410 stainless	7.70	480
ENGINEERING PLASTICS		
ABS, general purpose	1.01-1.05	64
Acrylics, cast sheet	1.19	74
Nylon 6/6	1.13-1.15	71
Phenolic, general purpose	1.35-1.46	87
Polycarbonates, general purpose	1.2	75
Polyesters, thermoplastic, unreinforced	1.31 - 1.43	86
Polyehtylene, medium density	0.926-0.940	58
Polyvinyl Chloride	1.30-1.58	89

APPROXIMATE DENSITIES OF COMMON MATERIALS

	REPRESENTATIVE DENSITIES	
	Grams per cc	lb per cu ft
OTHER MATERIALS		
Concrete (stone and sand)	2.2-2.4	144
Limestone	1.5	94
Anthracite coal, not piled	1.4-1.8	100
Bituminous coal, not piled.	1.2-1.5	83
Lignite coal, not piled	1.1-1.4	78
Wood, air dried:		
Douglas fir	0.48-0.55	32
White oak	0.77	48
White maple	0.53	33
Oregon pine.	0.51	32
Hickory	0.74-0.80	48
Mahogany	0.56-0.85	44
African teak	0.99	62
Indian teak	0.66-0.88	48

Formulas and Constants

1 HP = 33,000 Foot-pounds of work per minute.

1 HP =.746 K.W. = K.W.P 1.341.

1 HP = 2547 B.T.U. per hour.

1 B.T.U. = Heat required to raise 1 lb. water 1-F.

1 B.T.U. = 777.6 Foot-pounds work.

1 Kilowatt Hour = 3415 B.T.U.

Heat Value of Carbon = 14,600 B.T.U. per pound.

Latent Heat of Fusion of Ice = 143.15 B.T.U. per pound.

Latent Heat of Evaporation of Water at 212° F. = 970.4 B.T.U. per pound.

Total Heat of Saturated Steam at atmospheric pressure = 1,150.4 B.T.U. per pound.

1 Ton of Refrigeration = 288,000 B.T.U. per 24 hours.

g = Acceleration of Gravity (commonly taken as 32.16 feet per second per second).

1 Radian = 57.296 degrees.

1 Meter = 100 cm. = 39.37 inches.

1 Kilometer =.62137 miles.

1 Gallon = 231 cubic inches.

1 Barrel = 31.5 gallons.

Atmospheric Pressure = 14.7 pounds per sq. in. = 29.92 inches mercury at 32º F.

1 Lb. per Sq. In. Pressure = 2.3095 feet fresh water at 62º F. = 2.0355 inches mercury at 32º F. = 2.0416 inches mercury at 62º F.

Water Pressure (pounds per sq. in.) =.433 X height of water in feet (Fresh water at 62ºF.).

Weight of 1 cu. ft. fresh Water = 62.355 lbs. at 62ºF. = 59.76 lbs. at 212º F.

Weight of 1 cu. ft. Air at 14.7 lbs. per sq. in. Pressure = .07608 lbs. at 62º F. =.08073 lbs. at 32º F.

† Also look in the General Index under Weights, Measures, or the subject material required.

Flywheel Formulas

Flywheels are used on some machines, for example air compressors, to even out load pulsations. The following formulas are useful in designing entire flywheels and flywheel rims. A V-belt sheave may also be used as a flywheel eliminating the need for a separate flywheel in the system.

Formulas for Entire Flywheel

Kinetic energy of rotation of a flywheel (foot pounds)
$=.0001705\ N^2(WR^2)^*$.

Torque to uniformly accelerate or decelerate a flywheel

$$= \frac{.03908\ (N_2 - N_1)\ (WR^2),\ ^*\ \text{pound-inches}}{t}$$

where N_2 = final R.P.M. and N_1 = initial R.P.M.
Velocity at outside diameter (feet per minute) = 0.2618 ND.

W = weight (pounds).

R = radius of gyration (feet).

N = speed (R.P.M.)

t = time to change from N_1 to N_2 (seconds).

F = face of rim (inches).

D = outside diameter of rim (inches).

d = inside diameter of rim (inches).

K = weight per cubic inch of material (pounds).

*WR^2 = flywheel effect (pounds X feet^2). See table to the right for WR^2 of rims. Ordinarily the WR^2 of the rim only is considered. In unusual instances the relatively small WR^2 values of the hub and arms or web can be added directly to the WR^2 of the rim if desired. To find the WR^2 of a hub or web use the WR^2 formula for rims, substituting the hub or web outside diameter, inside diameter, and width for D, d and F respectively. When arms are used instead of a web an approximate WR^2 value of the arms is the total weight of the arms in pounds times the square of the radius in feet from the shaft center line to the mid point of the arms between hub and rim.

Table 31: Formulas for Flywheel Rims

Property	Cast Iron Rim (Based on.26 lbs. per cu. in.)	Steel Rim (Based on .283 lbs. per cu. in.)	Rim of any material weighing K pounds per cubic inch
Volume (Cubic Inches)	$.7854F(D^2-d^2)$	$.7854F(D^2-d^2)$	$.7854F(D^2-d^2)$
W Weight (Pounds)	$.2042F(D^2-d^2)$	$.2223F(D^2-d^2)$	$.7854FK(D^2-d^2)$
R Radius of Gyration (Feet)	$\sqrt{\frac{.8681\ (D^2-d^2)}{1000}}$	$\sqrt{\frac{0.8681\ (D^2-d^2)}{1000}}$	$\sqrt{\frac{.8681\ (D^2-d^2)}{1000}}$
WR^2 Wt X Sq. of Radius of Gyration (Lbs. X Ft.^{2})	$\frac{.1773F(D^4-d^4)}{1000}$	$\frac{.1929F(D^4-d^4)}{1000}$	$\frac{.6818FK(D^4-d^4)}{1000}$
T ▲ Tensile Load in rim (Lbs.)	$\frac{.3078FN2(D^3-d^3)}{1000000}$	$\frac{.3350FN2(D^3-d^3)}{1000000}$	$\frac{1,184FKN2(D^3-d^3)}{1000000}$

▲ Centrifugal force causes this tensile load at each and every section of the rim. Hence, on rims split into two or more sections the fastening at each joint should be designed to take the full load as calculated from the formula here given.

Centrifugal Force

R = Distance from the axis of rotation to the center of gravity of the body (feet).

N = Revolutions per minute.

v = Velocity of the center of gravity of the body (feet per second).

g = Acceleration due to gravity (32.16 commonly).

$$F = \frac{Wv^2}{gR} = \frac{WRN^2}{2933} = .000341\ WRN^2$$

F = Centrifugal force tending to move the body outward from the axis of rotation (pounds).

W = Weight of body (pounds).

ENGINEERING

Torque and Horsepower Equivalents

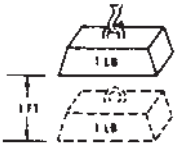

A foot-pound is the amount of energy expended in lifting a one-pound mass a distance of one foot against the pull of gravity

FOOT-POUNDS INDICATE ENERGY

TORQUE

It is: a turning moment or twisting effort.
Is it expressed in foot-pounds? or pound-feet?

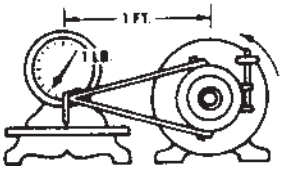

A pound-foot is the moment created by a force of one pound applied to the end of a lever arm one

POUND-FEET INDICATE TORQUE

Torque (in Pound-Inches) = $\frac{63025 \times HP}{RPM}$ = Force X Lever Arm (In Inches)

Torque (in Pound-Feet) = $\frac{5252 \times HP}{RPM}$ = Force X Lever Arm (In Feet)

Force = Working Load in Pounds.
FPM = Feet Per Minute.
RPM = Revolutions Per Minute.
Lever Arm = Distance from the Force to the center of rotation in Inches or Feet.

HORSEPOWER

Common Unit of Mechanical power - (HP)
One HP is the rate of work required to raise 33,000 pounds one foot in one minute

Example:

25 HP at 150 RPM = 10504 Pound-Inches Torque
2.5 HP at 150 RPM = 1050.4 Pound-Inches Torque

For other values of RPM move decimal point in RPM values to the left or right as desired, and in Torque values move to the right or left (opposite way) the same number of places.

Example:

25 HP at 150 RPM = 10504 Pound-Inches Torque
25 HP at 1.50 RPM = 1050400 Pound-Inches Torque
2.5 HP at 1.50 RPM = 105040 Pound-Inches Torque

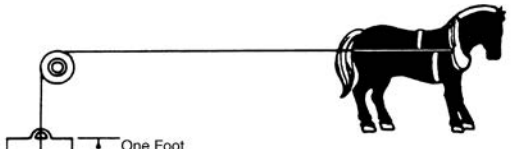

$HP = \frac{Force \times FPM}{33{,}000}$

$HP = \frac{Torque\ (in\ Pounds\text{-}Inches) \times RPM}{63{,}025}$

$HP = \frac{Torque\ (in\ Pounds\text{-}Feet) \times RPM}{5{,}252}$

Overhung Loads

An overhung load is a bending force imposed on a shaft due to the torque transmitted by V-drives, chain drives and other power transmission devices, other than flexible couplings.

Most motor and reducer manufacturers list the maximum values allowable for overhung loads. It is desirable that these figures be compared with the load actually imposed by the connected drive.

Overhung loads may be calculated as follows:

$$O.H.L. = \frac{63{,}000 \times HP \times F}{N \times R}$$

Where HP = Transmitted hp X service factor
N = RPM of shaft
R = Radius of sprocket, pulley. etc. (inches)
F = Factor (See chart to right)

Weights of the drive components are usually negligible. The formula is based on the assumption that the load is applied at a point equal to one shaft diameter from the bearing face. Factor F depends on the type of drive used:

F= { 1.00 for single chain drives.
1.3 for TIMING Belt Drives and Sync belt Drives.
1.25 for spur or helical gear or double chain drives.
1.50 for V-belt drives.
2.50 for flat belt drives.

Example: Find the overhung load imposed on a reducer by a double chain drive transmitting 7 hp @ 30 RPM. The pitch diameter of the sprocket is 10"; service factor is 1.3.
Solution:

$$O.H.L. = \frac{(63{,}000)\ (7 \times 1.3)\ (1.25)}{(30)\ (5)} = 4{,}780\ lbs.$$

Mathematical Equations

To find circumference of a circle, multiply diameter by 3.1416.
To find diameter of a circle, multiply circumference by .31831.
To find area of a circle, multiply square of diameter by .7854.
To find area of a rectangle, multiply length by breadth.
To find area of a triangle, multiply base by 1/2 perpendicular height.
To find area of ellipse, multiply product of both diameters by .7854.
To find area of parallelogram, multiply base by altitude.
To find side of an inscribed square, multiply diameter by 0.7071 or multiply circumference by 0.2251 or divide circumference by 4.4428.
To find side of inscribed cube, multiply radius of sphere by 1.1547.
To find side of an equal square, multiply diameter by .8862.
To find the surface of a sphere, square the diameter and multiply by 3.1416.
To find the volume of a sphere, cube the diameter and multiply by .5236.
A side of a square multiplied by 1.4142 equals diameter of its circumscribing circle.
A side of a square multiplied by 4.443 equals circumference of its circumscribing circle.

Table 32: Strength and Physical Properties of Various Metals

Metals and Alloys	Stress in Thousands of Pounds per Sq. Inch				Modulus of Elasticity Millions	Elongation%
	Tension Ultimate	Tension Yield Point	Compression Ultimate	Shear Ultimate		
Aluminum, Type 1100.0, Annealed	13	5	.....	9	10	45
Aluminum, Type 1100-H18, Hard	24	22	.....	13	10	15
Aluminum. Type 3003-0, Annealed	16	6	.....	11	10	40
Aluminum, Type 3003-H18, Hard	29	27	.....	16	10	10
Aluminum, Type 5052-0, Annealed	28	13	.....	18	10.20	30
Aluminum, Type 5052-H38, Hard	42	37	.....	24	10.20	8
Aluminum, Type 5056-0, Annealed	42	22	.....	26	10.30	35
Aluminum, Type 2014-0, Annealed	27	14	.....	18	10.60	18
Aluminum, Type 2014-T4, Heat Treated	62	42	.....	38	10.60	20
Aluminum, Type C4A, Casting. Solution Heat Treat	32	16	16▲	24	.....	8.50
Aluminum, Type S5C, As Die Cast	30	16	16▲	19	.....	9
Brass, Admiralty, Annealed	53	22	.....	.....	16	65
Brass, Aluminum, Annealed	60	27	.....	.....	16	55
Brass, Cartridge, 30% Zn, Annealed	44	11	.....	32	16	66
Brass, Cartridge, 30% Zn, Hard	76	63	.....	44	16	8
Brass, Naval, Annealed	57†	25†	.....	40 †	15	47†
Brass, Naval, Leaded, Annealed	57†	25†	.....	36 †	15	40†
Brass, Red, 15% Zn, Annealed	39	10	.....	31	17	48
Brass, Red, 15% Zn, Hard	70	57	.....	42	17	5
Brass, Red, Leaded, Cast, Grade 4A	33-46	17-24	10-12▲	.....	9.1-14.8	20-35
Brass, Red, Leaded, Cast, Grade 4B	30-38	12-17	11-12▲	.....	.....	15-27
Brass, Semi-Red, Leaded, Cast, Grade 5A	29-39	13-17	.....	.....	7.7-14.3	18-30
Brass, Semi-Red, Leaded, Cast, Grade 5B	30-40	12-16	8-10▲	.....	10-14	20-35
Brass, Yellow, 35% Zn, Annealed	46	14	.....	32	15	65
Brass, Yellow, 35% Zn, Hard	74	60	.....	43	15	8
Bronze, Aluminum, As Cast	67-95	27-45	.....	.....	15-18	5-35
Bronze, Commercial, 10% Zn, Annealed	37†	10†	.....	28 †	17	45=
Bronze, Manganese, Annealed	65†	30†	.....	42 v	15	33=
Bronze, Phosphor, Annealed	40-66	14-24	.....	.....	16-17	48-70
Bronze, Tin, High Leaded, Cast	23-38	11-22	12-16▲	.....	8.5-13	7-20
Bronze, Tin, Leaded, Cast	33-48	16-26	9-15▲	.....	10.6-16	15-40
Copper, Beryllium, Annealed	60-80	25-35v	.....	50-60 †	19	35-50†
Copper, Electrolytic, Tough Pitch, Annealed	32†	10†	.....	22 †	17	45†
Inconel, Cast	65-90	.....	.....	.....	23	10-20
Inconel, S, Cast	90-120	80-100	.....	.....	25	1-3
Inconel, Shapes, Plate, Etc., Annealed	80-100†	30-45†	.....	.....	31	35-55†
Inconel, X, Shapes, Plate, Etc., Annealed	110-130†	45-65†	.....	.....	31	40-55†
Iron, Cast, Class 30	30-34	.....	115	44	15	.....
Iron, Cast, Class 35	35-40	.....	125	43	16	.....
Iron, Ingot, Hot Rolled	44	23	.....	.....	29.80	47
Iron, Malleable, Class 32510	50	33	90	46	25	10-18
Iron, Malleable, Class 35018	55	37	90	51	25	18-25
Iron, Nodular (Ductile) Class 60-45-10	60	45	120	.....	22-25	10-25
Iron, Nodular (Ductile) Class 80-60-3	80	60	160	.....	22-25	3-10
Iron, Pearlitic, Malleable	60-90	40-70	.....	.....	28	3-12
Iron, Wrought, Hot Rolled	34-47	23-24	.....	.....	29	7-35
Lead, Hard, Rolled	4.0-4.6	.....	.....	.....	.....	31-48
Magnesium Alloy, Extruded, ASTM MIA	26-28	23-28	10-13	16	6.50	8-11
Magnesium Alloy, Extruded, ASTM AZ6IA-F	40-45	22-32	15-21	21	6.50	15-16
Magnesium Alloy, Cast, ASTM MIB	14	4.50	.....	11	6.50	5
Magnesium Alloy, Cast, ASTM AZ92A	24	14	.....	19	6.50	2
Magnesium Alloy, Cast, ASTM AZ9IA	36	23	.....	20	6.50	4

Table 32: Strength and Physical Properties of Various Metals

Metals and Alloys	Stress in Thousands of Pounds per Sq. Inch				Modulus of Elasticity Millions	Elongation%
	Tension Ultimate	Tension Yield Point	Compression Ultimate	Shear Ultimate		
Monel, Cast	65-90	32-45	.....	.....	23	20-50
Monel, S, Cast	120-145	80-130	.....	.....	24.20	1-4
Monel, Shapes, Plate, Etc., Annealed	70-85†	25-45†	.....	.....	26	35-50†
Monel, K, Shapes, Plate, Etc., Annealed	90-105†	40-65†	.....	26	25-45	35-55†
Muntz Metal, Cu 59.63%, Zn balance	54	21	.....	40	15	45
Nickel, Cast .	50-65	15-30	.....	.....	21.50	15-30
Nickel, Silver, Annealed	49-63†	18-30†	.....	.....	17-18	35-60†
Steel, Cast Carbon, Class 70,000 Normalized	70	38	.....	.....	30	28
Steel, Cast Low Alloy, Class 100,000, Normalized and Tempered	100	68	.....	.....	29-30	20
Steel, Cast Low Alloy, Class 120,000, Quenched and Tempered	120	95	.....	.....	29-30	16
Steel, Cast Low Alloy, Class 200,000, Quenched and Tempered	200	170	.....	.....	29-30	5
Steel, Sheets	48	25	.....	.....	29-30	18-27
Steel, Stainless, Austenitic, Types 304, 316	85	35	.....	.....	28	55-60
Steel, Stainless, Martensitic, Type 416	75	40	.....	.....	29	30
Steel, Structural, Bridge and Building, ASTM A7	60-72	33	33▲	45-54	29-30	21
Steel, Structural, High Strength, Low Alloy, ASTM A242	63-70	42-50	42-50▲	47-53	29-30	18-24
Zinc, Die Cast Alloy XXIII	41	.....	60▲	31	.....	10

† When hardened, strength values are higher, elongation less

▲ Compression yield point

Table 33: Properties of Sections

A = area
I = moment of inertia
J = polar moment of inertia
Z = section modulus π
k = radius of gyration
y = centroidal distance

Rectangle

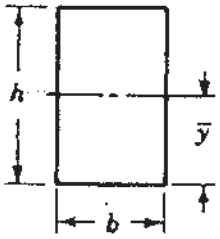

$A = bh$

$I = \frac{bh^3}{12}$

$Z = \frac{bh^2}{6}$

$k = 0.289h$

$\bar{y} = \frac{h}{2}$

Triangle

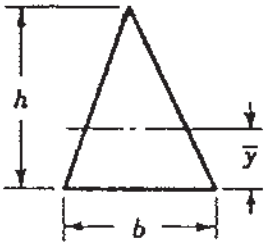

$A = \frac{bh}{2}$

$I = \frac{bh^3}{36}$

$Z = \frac{bh^2}{24}$

$k = 0.236h$

$\bar{y} = \frac{h}{3}$

Circle

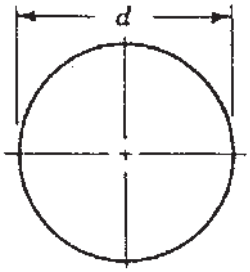

$A = \frac{\pi d^2}{4}$

$I = \frac{\pi d^4}{64}$

$Z = \frac{\pi d^3}{32}$

$J = \frac{\pi d^4}{32}$

$k = \frac{d}{4}$

$\bar{y} = \frac{d}{2}$

Hollow Circle

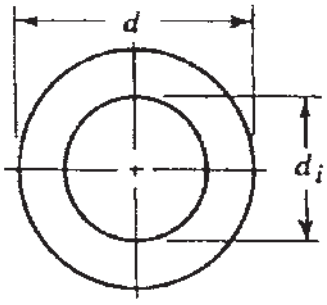

$A = \frac{\pi d}{4}(d^2 - d_i^2)$

$I = \frac{\pi}{64}(d^4 - d_i^4)$

$Z = \frac{\pi}{32d}(d^4 - d_i^4)$

$J = \frac{\pi}{32}(d^4 - d_i^4)$

$k = \sqrt{\frac{d^2 - d_i^2}{16}}$

$\bar{y} = \frac{d}{2}$

ENGINEERING

Table 34: Coefficients of Friction "f"

Material	Static		Sliding	
	Dry	Lubricated	Dry	Lubricated
Aluminum on aluminum	1.35	....	....	....
Canvas belt on rubber lagging	0.30	....	....	....
Canvas belt, stitched, on steel	....	....	0.20	0.10
Canvas belt, woven, on steel	....	....	0.22	0.10
Cast iron on asbestos, fabric	....	....	....	....
brake material	....	....	0.35-0.40	....
Cast iron on brass	....	....	0.30	....
Cast iron on bronze	....	....	0.22	0.07-0.08
Cast iron on cast iron	1.10	....	0.15	0.06-0.10
Cast iron on copper	1.05	....	0.29	....
Cast iron on lead	....	....	0.43	....
Cast iron on leather	0.60	....		0.13-0.36
Cast iron on oak (parallel)	....	....	0.30-0.50	0.07-0.20
Cast iron on magnesium	....	....	0.25	....
Cast iron on steel, mild	....	0.18	0.23	1/0/00 3:11
Cast iron on tin	....	....	0.32	....
Cast iron on zinc	0.85	....	0.21	....
Earth on earth	0.25-1.0	....	....	....
Glass on glass	0.94	....	0.40	....
Hemp rope on wood	0.50-0.80	....	0.40-0.70	....
Nickel on nickel	1.10	....	0.53	0.12
Oak on leather (parallel)	0.50-0.60	....	0.30-0.50	....
Oak on oak (parallel)	0.62	....	0.48	0.16
Oak on oak (perpendicular)	0.54	....	0.32	0.07
Rubber tire on pavement	0.8-0.9	0.6-0.7 *	0.75-0.85	0.5-0.7*
Steel on ice	0.03	....	0.01	....
Steel, hard, on babbit	0.42-0.70	0.08-0.25	0.33-0.35	0.05-0.16
Steel, hard. on steel, hard	0.78	0.11-0.23	0.42	0.03-0.12
Steel, mild, on aluminum	0.61	....	0.47	....
Steel, mild, on brass	0.51	....	0.44	....
Steel, mild, on bronze	....	....	0.34	0.17
Steel, mild, on copper	0.53	....	0.36	0.18
Steel, mild, on steel, mild	0.74	....	0.57	0.09-0.19
Stone masonry on concrete	0.76	....	....	....
Stone masonry on ground	0.65	....	....	....
Wrought iron on bronze	0.19	0.07-0.08	0.18	....
Wrought iron on wrought iron	....	0.11	0.44	0.08-0.10

* Wet pavement

Table 35: U.S. Standard Sheet Metal Gages

Gage No.	Thickness in Decimal Parts of an Inch	Gage No.	Thickness in Decimal Parts of an Inch
1	.2813	20	.0359
2	.2656	21	.0329
3	.2391	22	.0299
4	.2242	23	.0269
5	.2092	24	.0239
6	.1943	25	.0209
7	.1793	26	.0179
8	.1644	27	.0164
9	.1495	28	.0149
10	.1345	29	.0135
11	.1196	30	.0120
12	.1046	31	.0109
13	.0897	32	.0102
14	.0747	33	.0094
15	.0673	34	.0086
16	.0598	35	.0078
17	.0538	36	0070
18	.0478	37	.0066
19	.0418	38	.0063

Hardness Comparison Chart

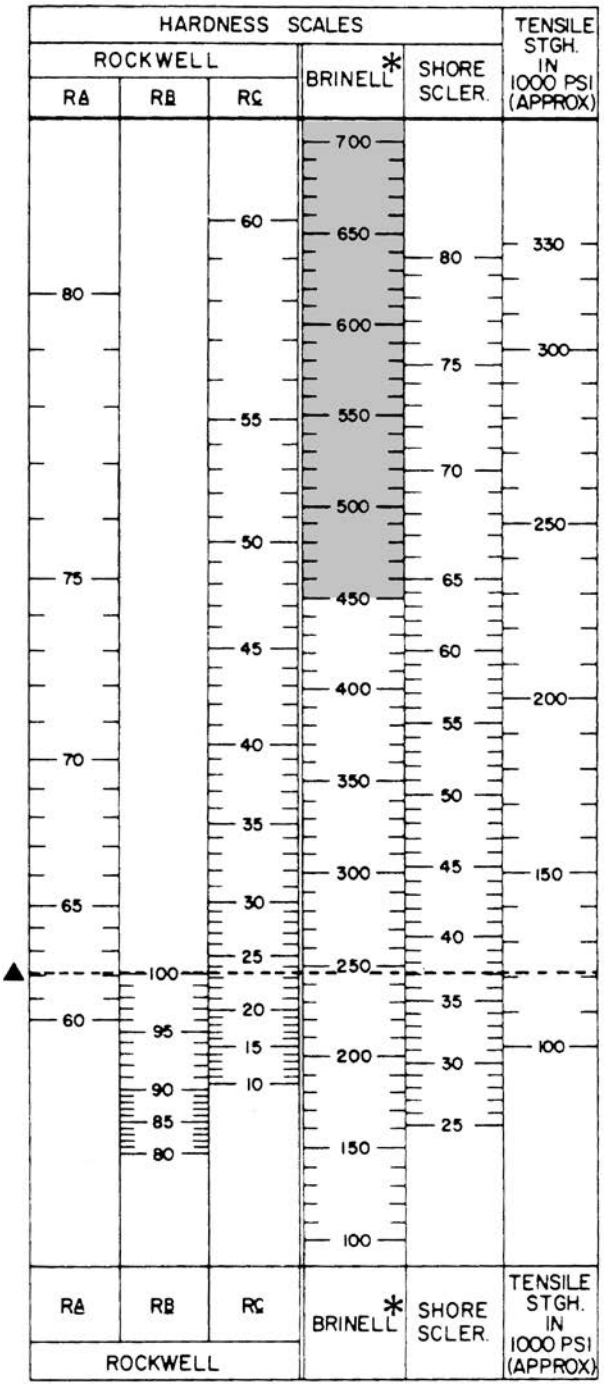

* Shaded area indicates values may vary depending on type of ball used.

▲ Example: A Brinell number of 245 is equal to 62 Rockwell "A", 100 Rockwell "B", 23 Rockwell "C", 37 Shore with a tensile of approximately 120,000 psi.

Trigonometric Formula

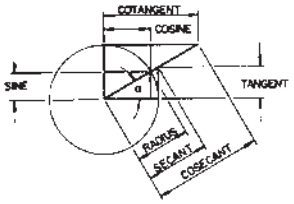

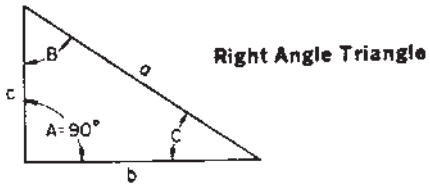

Table 36: Formulas for Finding Functions of Angles

Side opposite / Hypotenuse	=	SINE
Side adjacent / Hypotenuse	=	COSINE
Side opposite / Side adjacent	=	TANGENT
Side adjacent / Side opposite	=	COTANGENT
Hypotenuse / Side adjacent	=	SECANT
Hypotenuse / Side opposite	=	COSECANT

Table 37: Formulas for Finding Sides of Right Angle Triangles with an Angle and Side Known

To find: Length of side opposite	Hypotenuse x Sine Hypotenuse ÷ Coscant Side adjacent x Tangent Side adjacent ÷ Cotangent
To find: Length of side adjacent	Hypotenuse X Cosine Hypotenuse ÷ Secant Side opposite X Cotangent Side opposite ÷ Tangent
To find: Length of Hypotenuse	Side opposite X Cosecant Side opposite ÷ Sine Side adjacent X Secant Side adjacent ÷ Cosine

Table 38: To Find Angles and Sides of Right Angle Triangles

To Find Angles				To Find Angles		
To Find:	Formulas			To Find:	Formulas	
C	$\frac{c}{a}$	=	Sine C	a	$\sqrt{b^2 + c^2}$	- - -
C	$\frac{b}{a}$	=	Cosine C	a	c x Cosec. C	$\frac{c}{\text{Sine C}}$
C	$\frac{c}{b}$	=	Tan. C	a	c x Secant B	$\frac{c}{\text{Cosine B}}$
C	$\frac{b}{c}$	=	Cotan C	a	b x Cosec. B	$\frac{b}{\text{Sine B}}$
C	$\frac{a}{b}$	=	Secant C	a	b x Secant C	$\frac{b}{\text{Cosine C}}$
C	$\frac{a}{c}$	=	Cosec. C	b	$\sqrt{a^2 - c^2}$	- - -
B	$\frac{c}{a}$	=	Sine B	b	a x Sine B	$\frac{a}{\text{Cosecant B}}$
B	$\frac{c}{a}$	=	Cosine B	b	a x Cos. C	$\frac{a}{\text{Secant C}}$
B	$\frac{b}{c}$	=	Tan. B	b	c x Tan. B	$\frac{c}{\text{Cotangent B}}$
B	$\frac{c}{d}$	=	Cotan. B	b	c x Cot. C	$\frac{c}{\text{Tangent C}}$
B	$\frac{a}{c}$	=	Secant B	c	$\sqrt{a^2 - b^2}$	- - -
B	$\frac{a}{b}$	=	Cosec. B	c	a x Cos. B	$\frac{a}{\text{Secant B}}$
				c	a x Sine C	$\frac{a}{\text{Cosecant C}}$
				c	b x Cot. B	$\frac{b}{\text{Tangent B}}$
				c	b x Tan. C	$\frac{b}{\text{Cotangent C}}$

Table 39: To Find Angles and Sides of Oblique Angle Triangle

Oblique Angle Triangle

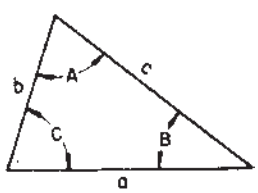

To Find Angles and Sides of Oblique Angle Triangle					
To find:	Known	Formulas	To Find:	Known	Formulas
C	A, B	180° (A + B)	A	B, C	180°- (B + C)
b	a, B, A	$\frac{\text{a x Sin. B}}{\text{Sin A}}$	Cos. A	a, b, c	$\frac{b^2 + c^2 - a^2}{2bc}$
c	a, A, C	$\frac{\text{a x Sin. C}}{\text{Sin. A}}$	Sin. C	c, A, a	$\frac{\text{c x Sin. A}}{\text{a}}$
Tan. A	a, C, b	$\frac{\text{a x Sin. C}}{\text{b - (a x Cos. C)}}$	Cot. B	a, C, b	$\frac{\text{a x Cosec. C}}{\text{b}}$
B	A, C	180° - (A + C)	c	b, C, B	b x Sin. C x Cosec. B
Sin. B	b, A, a	$\frac{\text{b x Sin. A}}{\text{a}}$	- - -	- - -	- - - - -

DODGE®

ENGINEERING

NEMA QUICK REFERENCE CHART

- Dimensions are for reference only
- Drawings represent standard TEFC general purpose motors

Contact your local DODGE/Reliance Sales Office at 1-864-284-5700 for "C" dimensions.

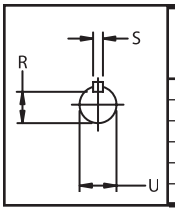

FRAME		NEMA SHAFT	KEYSEAT DIMENSIONS		FRAME		NEMA SHAFT	KEYSEAT DIMENSIONS	
		U	R	S			U	R	S
48	48	1/2	29/64	FLAT	284T	286T	1-7/8	1-19/32	1/2
56	56	5/8	33/64	3/16	324T	326T	2-1/8	1-27/32	1/2
143T	145T	7/8	49/64	3/16	364T	365T	2-3/8	2-1/64	5/8
182T	184T	1-1/8	63/64	1/4	404T	405T	2-7/8	2-29/64	3/4
213T	215T	1-3/8	1-13/64	5/16	444T	445T	3-3/8	2-7/8	7/8
254T	256T	1-5/8	1-13/32	3/8	447T	449T	3-3/8	2-7/8	7/8

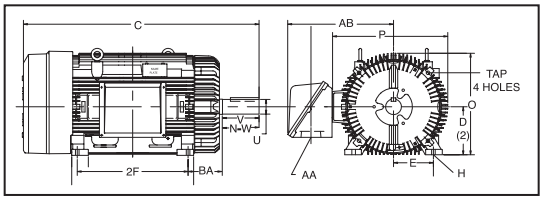

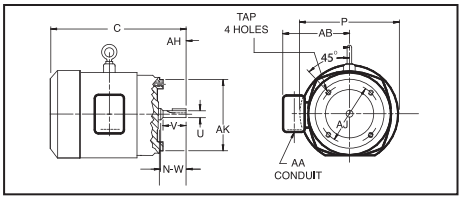

NEMA C-FACE	BA Dimensions
143TC - 145TC	2-3/4
182TC - 184 TC	3-1/2
213TC - 215TC	4-1/4
254TC- 256TC	4-3/4

NEMA Frame	D	E	2F	H	N-W	O	P	U	Keyway	V	AA	AB	AH	AJ	AK	BA	Tap Size
48	3	2-1/8	2-3/4	11/32 SLOT	1-1/2	5-13/16	5-5/8	1/2		1-1/2	1/2	-	1-11/16	3-3/4	3	2-1/2	1/4-20
56	3-1/2	2-7/16	3	11/32	1-7/8	8-9/16	7-9/32	5/8	3/16x3/32	1-7/8	1/2	-	2-1/16	5-7/8	4-1/4	2-3/4	3/8-16
56H	3-1/2	2-7/16	5	SLOT	1-7/8	8-9/16	7-9/32	5/8	3/16x3/32	1-7/8	1/2	-	2-1/16	5-7/8	4-1/2	2-3/4	3/8-16
143T	3-1/2	2-7/16	4	11/32	2-1/4	8-9/16	7-9/32	7/8	3/16x3/32	2-1/4	3/4	-	2-1/8	5-7/8	4-1/2	2-1/4	3/8-16
145T	3-1/2	2-3/4	5	11/32	2-1/4	8-9/16	7-9/32	7/8	3/16x3/32	2-1/4	3/4	-	2-1/8	5-7/8	4-1/2	2-1/4	3/8-16
182	4-1/2	3-3/4	4-1/2	13/32	2-1/4	9-7/8	9-1/4	7/8	3/16x3/32	2-1/4	3/4	8-7/16	2-1/8	5-7/8	4-1/2	2-3/4	3/8-16
184	4-1/2	3-3/4	5-1/2	13/32	2-1/4	9-7/8	9-1/4	7/8	3/16x3/32	2-1/4	3/4	8-7/16	2-1/8	5-7/8	4-1/2	2-3/4	3/8-16
182T	4-1/2	3-3/4	4-1/2	13/32	2-3/4	9-7/8	9-1/4	1-1/8	1/4x1/8	2-3/4	3/4	7-13/16	2-5/8	7-1/4	8-1/2	2-3/4	1/2-13
184T	4-1/2	3-3/4	5-1/2	13/32	2-3/4	9-7/8	9-1/4	1-1/8	1/4x1/8	2-3/4	3/4	7-13/16	2-5/8	7-1/4	8-1/2	2-3/4	1/2-13
213	5-1/4	4-1/4	5-1/2	13/32	3	11-1/4	10-1/2	1-1/8	1/4x1/8	3	1	9-5/16	2-3/4	7-1/4	8-1/2	3-1/2	1/2-13
215	5-1/4	4-1/4	7	13/32	3	11-1/4	10-1/2	1-1/8	1/4x1/8	3	1	9-5/16	2-3/4	7-1/4	8-1/2	3-1/2	1/2-13
213T	5-1/4	4-1/4	5-1/2	13/32	3-3/8	11-1/4	10-1/2	1-3/8	5/16x5/32	3-3/8	1	8-11/16	3-1/8	7-1/4	8-1/2	3-1/2	1/2-13
215T	5-1/4	4-1/4	7	13/32	3-3/8	11-1/4	10-1/2	1-3/8	5/16x5/32	3-3/8	1	8-11/16	3-1/8	7-1/4	8-1/2	3-1/2	1/2-13
254U	6-1/4	5	8-1/4	17/32	3-3/4	13-1/4	13-1/4	1-3/8	5/16x5/32	3-3/4	1-1/4	10-13/16	3-1/2	7-1/4	8-1/2	4-1/4	1/2-13
256U	6-1/4	5	10	17/32	3-3/4	13-1/4	13-1/4	1-3/8	5/16x5/32	3-3/4	1-1/4	10-13/16	3-1/2	7-1/4	8-1/2	4-1/4	1/2-13
254T	6-1/4	5	8-1/4	17/32	4	13-1/4	13-1/4	1-5/8	3/8x3/16	4	1-1/4	10-3/4	3-3/4	7-1/4	8-1/2	4-1/4	1/2-13
256T	6-1/4	5	10	17/32	4	13-1/4	13-1/4	1-5/8	3/8x3/16	4	1-1/4	10-3/4	3-3/4	7-1/4	8-1/2	4-1/4	1/2-13
284U	7	5-1/2	9-1/2	17/32	4-7/8	14-3/4	14-7/8	1-5/8	3/8x3/16	4-7/8	1-1/2	12-5/8	4-5/8	9	10-1/2	4-3/4	1/2-13
286U	7	5-1/2	11	17/32	4-7/8	14-3/4	14-7/8	1-5/8	3/8x3/16	4-7/8	1-1/2	12-5/8	4-5/8	9	10-1/2	4-3/4	1/2-13
284T	7	5-1/2	9-1/2	17/32	4-5/8	14-3/4	14-7/8	1-7/8	1/2x1/4	4-5/8	1-1/2	12-3/4	4-3/8	9	10-1/2	4-3/4	1/2-13
286T	7	5-1/2	11	17/32	4-5/8	14-3/4	14-7/8	1-7/8	1/2x1/4	4-5/8	1-1/2	12-3/4	4-3/8	9	10-1/2	4-3/4	1/2-13
284TS	7	5-1/2	9-1/2	17/32	3-1/4	14-3/4	14-7/8	1-5/8	3/8x3/16	3-1/4	1-1/2	12-3/4	3	9	10-1/2	4-3/4	1/2-13
286TS	7	5-1/2	11	17/32	3-1/4	14-3/4	14-7/8	1-5/8	3/8x3/16	3-1/4	1-1/2	12-3/4	3	9	10-1/2	4-3/4	1/2-13
324U	8	6-1/4	10-1/2	21/32	5-5/8	16-11/16	17	1-7/8	1/2x1/4	5-5/8	2	15-7/16	5-3/8	11	12-1/2	5-1/4	5/8-11
326U	8	6-1/4	12	21/32	5-5/8	16-11/16	17	1-7/8	1/2x1/4	5-5/8	2	15-7/16	5-3/8	11	12-1/2	5-1/4	5/8-11
324T	8	6-1/4	10-1/2	21/32	5-1/4	16-11/16	17	2-1/8	1/2x1/4	5-1/4	2	15-3/16	5	11	12-1/2	5-1/4	5/8-11
326T	8	6-1/4	12	21/32	5-1/4	16-11/16	17	2-1/8	1/2x1/4	5-1/4	2	15-3/16	5	11	12-1/2	5-1/4	5/8-11
324TS	8	6-1/4	10-1/2	21/32	3-3/4	16-11/16	17	1-7/8	1/2x1/4	3-3/4	2	15-3/16	3-1/2	11	12-1/2	5-1/4	5/8-11
326TS	8	6-1/4	12	21/32	3-3/4	16-11/16	17	1-7/8	1/2x1/4	3-3/4	2	15-3/16	3-1/2	11	12-1/2	5-1/4	5/8-11
364U	9	7	11-1/4	21/32	6-3/8	18-1/2	19-1/2	2-1/8	1/2x1/4	6-3/8	2-1/2	18	6-1/8	11	12-1/2	5-7/8	5/8-11
365U	9	7	12-1/4	21/32	6-3/8	18-1/2	19-1/2	2-1/8	1/2x1/4	6-3/8	2-1/2	18	6-1/8	11	12-1/2	5-7/8	5/8-11
364T	9	7	11-1/4	21/32	5-7/8	18-1/2	19-1/2	2-3/8	5/8x5/16	5-7/8	2-1/2	18-1/16	5-5/8	11	12-1/2	5-7/8	5/8-11
365T	9	7	12-1/4	21/32	5-7/8	18-1/2	19-1/2	2-3/8	5/8x5/16	5-7/8	2-1/2	18-1/16	5-5/8	11	12-1/2	5-7/8	5/8-11
364TS	9	7	11-1/4	21/32	3-3/4	18-1/2	19-1/2	1-7/8	1/2x1/4	3-3/4	2-1/2	18-1/16	3-1/2	11	12-1/2	5-7/8	5/8-11
365TS	9	7	12-1/4	21/32	3-3/4	18-1/2	19-1/2	1-7/8	1/2x1/4	3-3/4	2-1/2	18-1/16	3-1/2	11	12-1/2	5-7/8	5/8-11
404U	10	8	12-1/4	13/16	7-1/8	21-5/16	22-1/2	2-3/8	5/8x5/16	7-1/8	3	19-1/4	6-7/8	11	12-1/2	6-5/8	5/8-11
405U	10	8	13-3/4	13/16	7-1/8	21-5/16	22-1/2	2-3/8	5/8x5/16	7-1/8	3	19-1/4	6-7/8	11	12-1/2	6-5/8	5/8-11
404T	10	8	12-1/4	13/16	7-1/4	21-5/16	22-1/2	2-7/8	3/4x3/8	7-1/4	3	19-5/16	7	11	12-1/2	6-5/8	5/8-11
405T	10	8	13-3/4	13/16	7-1/4	21-5/16	22-1/2	2-7/8	3/4x3/8	7-1/4	3	19-5/16	7	11	12-1/2	6-5/8	5/8-11
404TS	10	8	12-1/4	13/16	4-1/4	21-5/16	22-1/2	2-1/8	1/2x1/4	4-1/4	3	19-5/16	4	11	12-1/2	6-5/8	5/8-11
405TS	10	8	13-3/4	13/16	4-1/4	21-5/16	22-1/2	2-1/8	1/2x1/4	4-1/4	3	19-5/16	4	11	12-1/2	6-5/8	5/8-11
444U	11	9	14-1/2	13/16	8-5/8	23-3/8	25-1/4	2-7/8	3/4x3/8	8-5/8	3	22-3/16	8-3/8	14	16	7-1/2	5/8-11
445U	11	9	16-1/2	13/16	8-5/8	23-3/8	25-1/4	2-7/8	3/4x3/8	8-5/8	3	22-3/16	8-3/8	14	16	7-1/2	5/8-11
444T	11	9	14-1/2	13/16	8-1/2	23-3/8	25-1/4	3-3/8	7/8x7/16	8-1/2	3	23-3/8	8-1/4	14	16	7-1/2	5/8-11
445T	11	9	16-1/2	13/16	8-1/2	23-3/8	25-1/4	3-3/8	7/8x7/16	8-1/2	3	23-3/8	8-1/4	14	16	7-1/2	5/8-11
447T	11	9	20	13/16	8-1/2	23-5/8	26	3-3/8	7/8x7/16	8-1/2	3	23-7/8	8-1/4	14	16	7-1/2	5/8-11
449T	11	9	25	13/16	8-1/2	23-5/8	26	3-3/8	7/8x7/16	8-1/2	3	23-7/8	8-1/4	14	16	7-1/2	5/8-11
444TS	11	9	14-1/2	13/16	4-3/4	23-3/8	25-1/4	2-3/8	5/8x5/16	4-3/4	3	23-3/8	4-1/2	14	16	7-1/2	5/8-11
445TS	11	9	16-1/2	13/16	4-3/4	23-3/8	25-1/4	2-3/8	5/8x5/16	4-3/4	3	23-3/8	4-1/2	14	16	7-1/2	5/8-11
447TS	11	9	20	13/16	4-3/4	23-5/8	26	2-3/8	5/8x5/16	4-3/4	4 NPT	23-7/8	4-1/2	14	16	7-1/2	5/8-11
449TS	11	9	25	13/16	4-3/4	23-5/8	26	2-3/8	5/8x5/16	4-3/4	4 NPT	23-7/8	4-1/2	14	16	7-1/2	5/8-11

IEC QUICK REFERENCE CHART

- Dimensions are for reference only
- Drawings represent standard TEFC general purpose motors

Contact your local DODGE/Reliance Sales Office at 1-864-284-5700 for "C" dimensions.

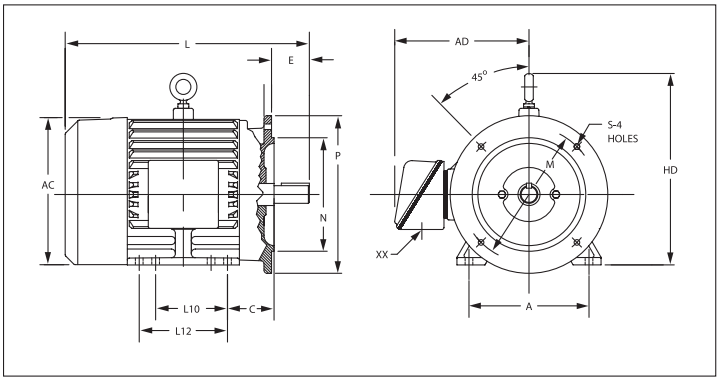

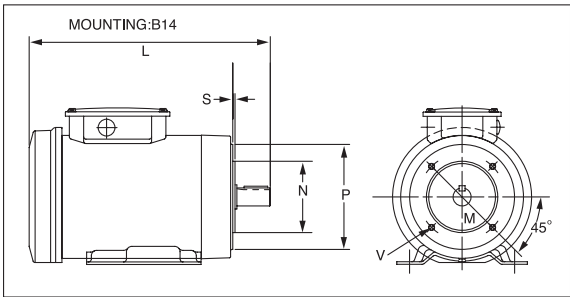

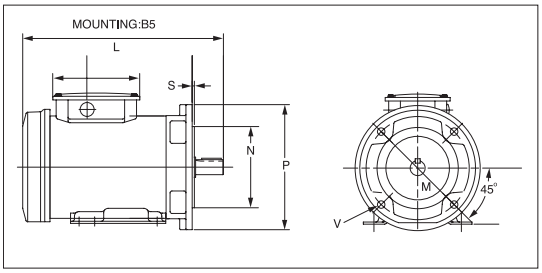

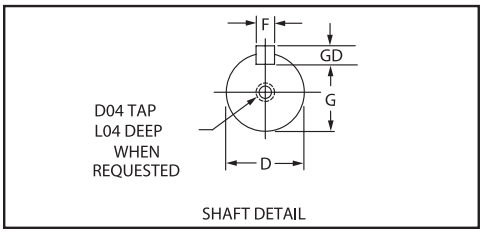

KEY AND KEYSEAT DIMENSIONS

FRAME	D	G	F	GD	FRAME	D	G	F	GD
71	14	11	5	5	160	37	42	12	8
80	19	15.5	6	6	180	48	42.5	14	9
90	24	20	8	7	200	55	49	16	10
100	28	24	8	7	225	60	53	18	11
112	28	24	8	7	250	70	67.5	20	12
132	38	33	10	8	280	80	71	22	14

Frame	B3 RIGID BASE					SHAFT		B5 FLANGE					B14 FACE					GENERAL		
	A	L10	L12	HD	C	E	D	N	M	P	S	V	N	M	P	S	V	AC	AD	XX
71	–	–	–	–	–	–	–	110	130	160	"3,5"	"9,5"	70	85	105	2.5	M6	143	–	13
80	125	100	–	188	50	40	19	130	165	200	"3,5"	"11,5"	80	100	120	3	M6	143	–	13
90	140	100	125	208	56	50	24	130	165	200	"3,5"	"11,5"	95	115	140	3	M8	163	–	13
100	160	112	140	229	63	60	28	180	215	250	4	14	110	130	160	3.5	M8	175	–	19
112S	190	114	–	301.8	71.4	60	28	180	215	250	4	14	110	130	160	3.5	M8	243	210	32
112M	190	–	140	301.8	71.4	60	28	180	215	250	4	14	110	130	160	3.5	M8	243	210	32
132S	216	140	–	336.6	88.9	80	38	230	265	300	4	14	130	165	200	3.5	M8	286	243	32
132M	216	–	178	336.6	88.9	80	38	230	265	300	4	14	130	165	200	3.5	M8	286	243	32
160M	254	210	–	399	108	110	42	250	300	350	5	18	180	215	250	4	M12	324	320	40
160L	254	–	254	399	108	110	42	250	300	350	5	18	180	215	250	4	M12	324	320	40
180M	279	241	–	436	121	110	48	250	300	350	5	18	398	355	40			398	355	40
180L	279	–	279	436	121	110	48	250	300	350	5	18	398	355	40			398	355	40
200M	318	267	–	486	133	110	55	300	350	400	5	18	442	445	50			442	445	50
200L	318	–	305	486	133	110	55	300	350	400	5	18	442	445	50			442	445	50
225S	356	286	–	545	149	140	60	350	400	450	5	18	490	470	50			490	470	50
225M	356	–	311	545	149	140	60	350	400	450	5	18	490	470	50			490	470	50
250S	406	311	–	616	168	140	65											600	510	63
250M	406	–	349	616	168	140	65											600	535	63
280S	457	368	-	677	190	140	75											650	535	63
280M	457	-	419	677	190	140	75											650	535	63
280K	457	500	-	677	190	140	75											650	535	63
280H	457	630	-	677	190	140	75											650	535	63
L280H	457	635	-	677	202	205	75											650	535	63

LEGEND
Metric Dimensions in MM
1 mm = .03937"

NOTES

PART NUMBER INDEX

Part Number	Page	Part Number	Page	Part Number	Page	Part Number	Page
004060	B17-42	005195	B17-49	006140	B17-38	010130	B17-53
004063	B17-42	005198	B17-49	006144	B17-38	010131	B17-53
004066	B17-42	005199	B17-49	006148	B17-38	012215	B17-46
004069	B17-42	005201	B17-49	006152	B17-38	012216	B17-46
004072	B17-42	006001	B17-40	010020	B17-53	012217	B17-46
004075	B17-42	006004	B17-40	010021	B17-53	012302	B4-82
004078	B17-42	006007	B17-40	010024	B17-53	012303	B4-82
004081	B17-42	006010	B17-40	010028	B17-53	012340	B4-82
004084	B17-42	006013	B17-40	010029	B17-53	012341	B4-82
004087	B17-42	006016	B17-40	010032	B17-53	012342	B4-82
004090	B17-42	006019	B17-40	010036	B17-53	012343	B4-82
004093	B17-42	006022	B17-40	010039	B17-53	013497	B19-24, B19-25
004096	B17-42	006025	B17-40	010043	B17-53	013498	B19-24, B19-25
004099	B17-42	006028	B17-40	010048	B17-53	013499	B19-24, B19-25
004102	B17-42	006031	B17-40	010051	B17-53	013511	B19-24, B19-25
004105	B17-42	006034	B17-40	010054	B17-53	013512	B19-24, B19-25
004108	B17-42	006037	B17-40	010055	B17-53	013513	B19-24, B19-25
004113	B17-42	006040	B17-40	010056	B17-53	013514	B19-24, B19-25
004114	B17-42	006043	B17-40	010057	B17-53	013515	B19-24, B19-25
004115	B17-42	006046	B17-40	010058	B17-53	013519	B19-24, B19-25
004116	B17-42	006049	B17-40	010059	B17-53	013520	B19-24, B19-25
005050	B17-37	006052	B17-40	010060	B17-53	013900	B19-24, B19-25
005051	B17-37	006055	B17-40	010061	B17-53	013901	B19-24, B19-25
005052	B17-37	006058	B17-40	010075	B17-53	013902	B19-24, B19-25
005053	B17-37	006061	B17-40	010076	B17-53	013903	B19-24, B19-25
005055	B17-37	006064	B17-40	010077	B17-53	013904	B19-24, B19-25
005056	B17-37	006067	B17-40	010078	B17-53	013905	B19-24, B19-25
005057	B17-37	006070	B17-40	010080	B17-53	013906	B19-24, B19-25
005058	B17-37	006073	B17-40	010081	B17-53	013907	B19-24, B19-25
005059	B17-37	006076	B17-40	010084	B17-53	013908	B19-24, B19-25
005060	B17-37	006079	B17-40	010085	B17-53	013909	B19-24, B19-25
005061	B17-37	006082	B17-40	010088	B17-53	013910	B19-24, B19-25
005062	B17-37	006102	B17-38	010089	B17-53	013916	B19-24, B19-25
005063	B17-37	006104	B17-38	010092	B17-53	013917	B19-24, B19-25
005064	B17-37	006107	B17-38	010093	B17-53	013918	B19-24, B19-25
005065	B17-37	006109	B17-38	010096	B17-53	019200	B19-27, B19-28
005066	B17-37	006110	B17-38	010097	B17-53	019201	B19-27, B19-28
005067	B17-37	006111	B17-38	010100	B17-53	019202	B19-27, B19-28
005068	B17-37	006113	B17-38	010104	B17-53	019203	B19-27, B19-28
005070	B17-48	006114	B17-38	010105	B17-53	019204	B19-27, B19-28
005073	B17-48	006115	B17-38	010107	B17-53	019210	B19-27, B19-28
005076	B17-48	006117	B17-38	010110	B17-53	019211	B19-27, B19-28
005079	B17-48	006118	B17-38	010112	B17-53	019212	B19-27, B19-28
005082	B17-48	006119	B17-38	010114	B17-53	019213	B19-27, B19-28
005085	B17-49	006120	B17-38	010117	B17-53	019214	B19-27, B19-28
005088	B17-49	006124	B17-38	010120	B17-53	019220	B19-27, B19-28
005091	B17-49	006125	B17-38	010123	B17-53	019221	B19-27, B19-28
005094	B17-49	006128	B17-38	010126	B17-53	019222	B19-27, B19-28
005097	B17-49	006129	B17-38	010127	B17-53	019223	B19-27, B19-28
005100	B17-49	006132	B17-38	010128	B17-53	019224	B19-27, B19-28
005117	B17-37	006136	B17-38	010129	B17-53	019230	B19-27, B19-28

PART NUMBER INDEX

DODGE®

Part Number	Page	Part Number	Page	Part Number	Page	Part Number	Page
019231	B19-27, B19-28	023019	B10-23	023076	B10-31	023127	B10-29
019232	B19-27, B19-28	023020	B10-23	023077	B10-31	023128	B10-29
019233	B19-27, B19-28	023021	B10-23	023078	B10-31	023129	B10-29
019234	B19-27, B19-28	023022	B10-23	023079	B10-31	023130	B10-29
019240	B19-27, B19-28	023023	B10-25	023080	B10-31	023131	B10-29
019241	B19-27, B19-28	023024	B10-25	023081	B10-31	023132	B10-29
019242	B19-27, B19-28	023025	B10-25	023082	B10-31	023133	B10-29
019243	B19-27, B19-28	023026	B10-25	023083	B10-31	023134	B10-29
019244	B19-27, B19-28	023027	B10-25	023084	B10-31	023135	B10-29
019250	B19-27, B19-28	023028	B10-25	023085	B10-31	023136	B10-29
019251	B19-27, B19-28	023029	B10-25	023086	B10-31	023137	B10-29
019252	B19-27, B19-28	023030	B10-25	023087	B10-31	023138	B10-29
019253	B19-27, B19-28	023031	B10-25	023088	B10-31	023139	B10-29
019254	B19-27, B19-28	023032	B10-25	023089	B10-31	023140	B10-29
019260	B19-27, B19-28	023033	B10-25	023090	B10-31	023141	B10-29
019261	B19-27, B19-28	023040	B10-25	023091	B10-31	023142	B10-29
019262	B19-27, B19-28	023041	B10-25	023092	B10-31	023143	B10-29
019263	B19-27, B19-28	023042	B10-25	023093	B10-27	023144	B10-29
019264	B19-27, B19-28	023043	B10-25	023094	B10-27	023145	B10-29
019270	B19-27, B19-28	023044	B10-25	023095	B10-27	023146	B10-29
019271	B19-27, B19-28	023045	B10-25	023096	B10-27	023147	B10-29
019272	B19-27, B19-28	023046	B10-25	023097	B10-27	023148	B10-29
019273	B19-27, B19-28	023047	B10-23	023098	B10-27	023149	B10-33
019274	B19-27, B19-28	023048	B10-23	023099	B10-27	023150	B10-33
019280	B19-27, B19-28	023049	B10-23	023100	B10-27	023151	B10-33
019281	B19-27, B19-28	023050	B10-23	023101	B10-27	023152	B10-33
019282	B19-27, B19-28	023051	B10-23	023102	B10-27	023153	B10-33
019283	B19-27, B19-28	023052	B10-23	023103	B10-27	023154	B10-33
019284	B19-27, B19-28	023053	B10-23	023104	B10-27	023155	B10-33
021218	B17-46	023054	B10-23	023105	B10-27	023156	B10-33
021219	B17-46	023055	B10-23	023106	B10-27	023157	B10-33
021220	B17-46	023056	B10-23	023107	B10-27	023158	B10-33
023000	B10-23	023057	B10-23	023108	B10-27	023159	B10-33
023001	B10-23	023058	B10-23	023109	B10-27	023160	B10-33
023002	B10-23	023059	B10-23	023110	B10-27	023161	B10-33
023003	B10-23	023060	B10-23	023111	B10-27	023162	B10-33
023004	B10-23	023061	B10-23	023112	B10-27	023163	B10-33
023005	B10-23	023062	B10-23	023113	B10-27	023164	B10-33
023006	B10-23	023063	B10-23	023114	B10-27	023165	B10-33
023007	B10-23	023064	B10-23	023115	B10-27	023166	B10-33
023008	B10-23	023065	B10-23	023116	B10-27	023167	B10-41
023009	B10-23	023066	B10-23	023117	B10-27	023168	B10-41
023010	B10-23	023067	B10-23	023118	B10-27	023170	B10-41
023011	B10-23	023068	B10-23	023119	B10-27	023171	B10-41
023012	B10-23	023069	B10-23	023120	B10-29	023172	B10-41
023013	B10-23	023070	B10-25	023121	B10-29	023173	B10-41
023014	B10-23	023071	B10-25	023122	B10-29	023174	B10-41
023015	B10-23	023072	B10-25	023123	B10-29	023175	B10-41
023016	B10-23	023073	B10-25	023124	B10-29	023176	B10-41
023017	B10-23	023074	B10-25	023125	B10-29	023177	B10-41
023018	B10-23	023075	B10-25	023126	B10-29	023178	B10-41

PART NUMBER INDEX

Part Number	Page	Part Number	Page	Part Number	Page	Part Number	Page
023179	B10-41	023254	B10-43	023316	B10-49	023388	B10-51
023180	B10-41	023256	B10-47	023318	B10-49	023389	B10-51
023181	B10-41	023261	B10-47	023322	B10-49	023390	B10-51
023182	B10-41	023263	B10-47	023325	B10-49	023391	B10-51
023183	B10-41	023265	B10-47	023327	B10-49	023392	B10-51
023184	B10-41	023266	B10-47	023329	B10-51	023393	B10-51
023186	B10-41	023269	B10-47	023330	B10-51	023394	B10-51
023187	B10-41	023270	B10-47	023331	B10-51	023396	B10-51
023188	B10-41	023271	B10-45	023332	B10-51	023397	B10-51
023189	B10-41	023272	B10-45	023333	B10-51	023399	B10-53
023190	B10-41	023273	B10-45	023334	B10-51	023400	B10-53
023192	B10-41	023274	B10-45	023335	B10-51	023401	B10-53
023193	B10-41	023275	B10-45	023337	B10-51	023403	B10-53
023194	B10-41	023276	B10-45	023338	B10-51	023404	B10-53
023195	B10-41	023277	B10-45	023339	B10-51	023407	B10-53
023196	B10-41	023278	B10-45	023340	B10-51	023408	B10-53
023197	B10-41	023279	B10-45	023341	B10-51	023409	B10-53
023198	B10-41	023280	B10-45	023342	B10-51	023410	B10-53
023199	B10-41	023281	B10-45	023343	B10-51	023411	B10-53
023200	B10-41	023282	B10-45	023344	B10-51	023412	B10-53
023201	B10-41	023283	B10-45	023345	B10-51	023413	B10-53
023203	B10-41	023284	B10-45	023346	B10-51	023414	B10-53
023204	B10-41	023285	B10-45	023347	B10-51	023415	B10-53
023205	B10-41	023286	B10-45	023349	B10-51	023416	B10-53
023206	B10-41	023287	B10-45	023350	B10-51	023425	B10-55
023208	B10-41	023288	B10-45	023352	B10-53	023431	B10-55
023209	B10-41	023289	B10-45	023353	B10-53	023432	B10-55
023210	B10-41	023290	B10-45	023354	B10-53	023433	B10-55
023212	B10-43	023291	B10-45	023356	B10-53	023435	B10-55
023214	B10-43	023292	B10-45	023357	B10-53	023436	B10-55
023215	B10-43	023293	B10-45	023360	B10-53	023439	B10-55
023219	B10-43	023294	B10-45	023361	B10-53	023440	B10-55
023220	B10-43	023295	B10-45	023362	B10-53	023443	B10-55
023221	B10-43	023296	B10-45	023363	B10-53	023445	B10-55
023223	B10-43	023297	B10-45	023364	B10-53	023447	B10-55
023224	B10-43	023298	B10-45	023365	B10-53	023448	B10-55
023227	B10-43	023299	B10-45	023366	B10-53	023449	B10-55
023228	B10-43	023300	B10-45	023367	B10-53	023454	B10-55
023230	B10-43	023301	B10-45	023368	B10-53	023460	B10-55
023232	B10-43	023302	B10-45	023369	B10-53	023461	B10-55
023234	B10-43	023303	B10-45	023376	B10-51	023462	B10-55
023236	B10-43	023304	B10-45	023377	B10-51	023464	B10-55
023237	B10-43	023305	B10-45	023378	B10-51	023465	B10-55
023241	B10-43	023306	B10-45	023379	B10-51	023468	B10-55
023242	B10-43	023307	B10-45	023380	B10-51	023469	B10-55
023243	B10-43	023308	B10-45	023381	B10-51	023472	B10-55
023245	B10-43	023309	B10-45	023382	B10-51	023474	B10-55
023246	B10-43	023310	B10-45	023384	B10-51	023476	B10-55
023249	B10-43	023311	B10-45	023385	B10-51	023477	B10-55
023250	B10-43	023312	B10-45	023386	B10-51	023478	B10-55
023252	B10-43	023314	B10-49	023387	B10-51	023480	B10-57

PART NUMBER INDEX

DODGE®

Part Number	Page
023481	B10-57
023482	B10-57
023483	B10-57
023484	B10-57
023485	B10-57
023486	B10-57
023487	B10-57
023488	B10-57
023489	B10-57
023490	B10-57
023491	B10-57
023492	B10-57
023493	B10-57
023494	B10-57
023495	B10-57
023496	B10-57
023497	B10-57
023498	B10-57
023499	B10-57
023500	B10-57
023501	B10-57
023502	B10-57
023503	B10-57
023504	B10-57
023505	B10-57
023506	B10-57
023507	B10-57
023508	B10-51, B10-57
023509	B10-51, B10-57
023510	B10-51, B10-57
023511	B10-51, B10-57
023512	B10-51, B10-57
023513	B10-51, B10-57
023514	B10-51, B10-57
023515	B10-57
023516	B10-51, B10-57
023517	B10-51, B10-57
023518	B10-51, B10-57
023519	B10-51, B10-57
023520	B10-51, B10-53, B10-57
023521	B10-51, B10-53, B10-57
023522	B10-51, B10-53, B10-57
023523	B10-51, B10-57
023524	B10-51, B10-53, B10-57
023525	B10-51, B10-53, B10-57
023526	B10-51, B10-57
023527	B10-57
023528	B10-51, B10-53, B10-57
023529	B10-51, B10-53, B10-57
023530	B10-53, B10-57
023531	B10-53, B10-57
023532	B10-53, B10-57
023533	B10-53, B10-57
023534	B10-53, B10-57
023535	B10-53, B10-57
023536	B10-53, B10-57
023537	B10-53, B10-57
023538	B10-57
023539	B10-57
023540	B10-57
023541	B10-57
023542	B10-57
023543	B10-57
023545	B10-57
023546	B10-57
023547	B10-57
023548	B10-57
023550	B10-57
023552	B10-57
023553	B10-57
023554	B10-57
023556	B10-57
023557	B10-57
023558	B10-57
023559	B10-57
023560	B10-57
023561	B10-57
023564	B10-57
023565	B10-57
023566	B10-57
023567	B10-57
023568	B10-57
023569	B10-57
023570	B10-57
023571	B10-57
023584	B10-61
023585	B10-61
023586	B10-61
023587	B10-61
023588	B10-61
023589	B10-61
023590	B10-61
023603	B10-61
023604	B10-61
023605	B10-61
023606	B10-61
023607	B10-61
023608	B10-61
023609	B10-61
023610	B10-61, B10-63
023611	B10-61, B10-63
023612	B10-61, B10-63
023613	B10-61, B10-63
023614	B10-61, B10-63
023615	B10-61, B10-63
023616	B10-61, B10-63
023620	B10-75
023621	B10-75
023622	B10-75
023623	B10-75
023624	B10-75
023625	B10-75
023626	B10-75
023627	B10-75
023628	B10-75
023629	B10-75
023630	B10-75
023631	B10-75
023632	B10-75
023633	B10-75
023634	B10-75
023635	B10-75
023636	B10-75
023637	B10-75
023638	B10-75
023639	B10-75
023640	B10-75
023641	B10-75
023690	B10-25
023691	B10-25
023692	B10-25
023693	B10-25
023694	B10-25
023695	B10-25
023700	B10-77
023701	B10-77
023702	B10-77
023703	B10-77
023704	B10-77
023705	B10-77
023706	B10-77
023707	B10-77
023708	B10-77
023709	B10-77
023710	B10-77
023711	B10-77
023712	B10-77
023713	B10-77
023714	B10-77
023715	B10-77
023795	B10-65
023796	B10-65
023797	B10-65
023798	B10-65
023799	B10-65
023800	B10-65
023801	B10-65
032867	B2-76
032868	B2-76
032871	B2-76
032872	B2-76
032874	B2-76
032875	B2-76
032876	B2-76
032877	B2-76
032878	B2-76
032879	B2-76
032881	B2-76
032882	B2-76
032886	B2-76
032887	B2-76
032923	B17-15
032937	B17-15
032940	B17-12
032941	B17-12
032942	B17-12
032943	B17-12
032945	B17-12
032946	B17-12
032947	B17-12
032949	B17-12
032950	B17-12
032951	B17-12
032953	B17-12
032954	B17-12
032955	B17-12
032956	B17-12
032957	B17-12
032959	B17-12
032960	B17-12
032970	B17-12
032971	B17-12
032972	B17-12
032973	B17-12
032975	B17-12
032976	B17-12
032977	B17-12

PART NUMBER INDEX

DODGE®

Part Number	Page	Part Number	Page	Part Number	Page	Part Number	Page
032979	B17-12	033212	B17-18	033592	B17-26	033696	B17-33
032980	B17-12	033213	B17-18	033593	B17-26	033697	B17-33
032981	B17-12	033214	B17-18	033594	B17-26	033698	B17-33
032983	B17-12	033215	B17-18	033595	B17-26	033699	B17-33
032984	B17-12	033216	B17-18	033596	B17-26	033739	B17-24
032985	B17-12	033217	B17-18	033597	B17-26	033740	B17-24
032986	B17-12	033218	B17-18	033598	B17-26	033741	B17-24
032987	B17-12	033247	B17-14	033599	B17-26	033742	B17-24
032989	B17-12	033251	B17-14	033600	B17-26	033743	B17-24
032990	B17-12	033260	B17-18	033601	B17-26	033744	B17-24
033077	B17-10	033261	B17-18	033602	B17-26	033745	B17-24
033085	B17-16	033262	B17-18	033610	B17-26	033750	B17-24
033086	B17-16	033263	B17-18	033611	B17-26	033751	B17-24
033087	B17-16	033264	B17-18	033612	B17-26	033752	B17-24
033088	B17-16	033265	B17-18	033613	B17-26	033753	B17-24
033089	B17-16	033266	B17-18	033614	B17-26	033754	B17-24
033090	B17-16	033267	B17-18	033615	B17-26	033755	B17-24
033091	B17-16	033268	B17-18	033616	B17-26	033756	B17-24
033092	B17-16	033269	B17-18	033617	B17-26	033810	B17-20
033093	B17-16	033270	B17-18	033618	B17-26	033811	B17-20
033094	B17-16	033271	B17-18	033619	B17-26	033812	B17-20
033095	B17-16	033272	B17-18	033620	B17-26	033813	B17-20
033096	B17-16	033273	B17-18	033621	B17-26	033814	B17-20
033097	B17-16	033274	B17-18	033622	B17-26	033815	B17-20
033098	B17-16	033275	B17-18	033623	B17-26	033816	B17-20
033185	B17-16	033276	B17-18	033624	B17-26	033817	B17-20
033186	B17-16	033277	B17-18	033625	B17-26	033818	B17-20
033187	B17-16	033278	B17-18	033626	B17-26	033819	B17-20
033188	B17-16	033321	B17-15	033627	B17-26	033820	B17-20
033189	B17-16	033323	B17-15	033667	B17-10	033821	B17-20
033190	B17-16	033347	B17-14	033668	B17-10	033822	B17-20
033191	B17-16	033351	B17-14	033669	B17-10	033823	B17-20
033192	B17-16	033475	B17-14	033670	B17-10	033824	B17-20
033193	B17-16	033480	B17-14	033672	B17-10	033825	B17-20
033194	B17-16	033485	B17-14	033673	B17-10	033826	B17-20
033195	B17-16	033490	B17-14	033674	B17-10	033840	B17-20
033196	B17-16	033500	B17-14	033676	B17-10	033841	B17-20
033197	B17-16	033505	B17-14	033677	B17-10	033842	B17-20
033198	B17-16	033510	B17-14	033678	B17-10	033843	B17-20
033200	B17-18	033515	B17-14	033680	B17-10	033844	B17-20
033201	B17-18	033525	B17-14	033681	B17-10	033845	B17-20
033202	B17-18	033530	B17-14	033682	B17-10	033846	B17-20
033203	B17-18	033535	B17-14	033683	B17-10	033847	B17-20
033204	B17-18	033540	B17-14	033684	B17-10	033848	B17-20
033205	B17-18	033585	B17-26	033686	B17-10	033849	B17-20
033206	B17-18	033586	B17-26	033687	B17-10	033850	B17-20
033207	B17-18	033587	B17-26	033688	B17-10	033851	B17-20
033208	B17-18	033588	B17-26	033692	B17-32	033852	B17-20
033209	B17-18	033589	B17-26	033693	B17-32	033853	B17-20
033210	B17-18	033590	B17-26	033694	B17-32	033854	B17-20
033211	B17-18	033591	B17-26	033695	B17-32	033855	B17-20

PART NUMBER INDEX

Part Number	Page	Part Number	Page	Part Number	Page	Part Number	Page
033856	B17-20	033919	B17-22	033998	B17-10	034260	B17-16
033862	B17-15	033920	B17-22	034020	B19-44	034261	B17-16
033863	B17-15	033921	B17-22	034021	B19-44	034262	B17-16
033867	B17-15	033922	B17-22	034022	B19-44	034263	B17-16
033868	B17-15	033923	B17-22	034023	B19-44	034264	B17-16
033869	B17-15	033924	B17-22	034024	B19-44	034265	B17-16
033870	B17-22	033925	B17-22	034025	B19-44	034266	B17-16
033871	B17-22	033926	B17-22	034030	B17-50, B19-44	034267	B17-16
033872	B17-22	033927	B17-22	034031	B17-50, B19-44	034268	B17-16
033873	B17-22	033928	B17-22	034032	B17-50, B19-44	034269	B17-16
033874	B17-22	033929	B17-15	034033	B17-50, B19-44	034270	B17-16
033875	B17-22	033930	B17-15	034034	B17-50, B19-44	034271	B17-16
033876	B17-22	033931	B17-15	034035	B17-50, B19-44	034272	B17-16
033877	B17-22	033932	B17-15	034117	B17-26	034273	B17-18
033878	B17-22	033933	B17-15	034218	B17-16	034274	B17-18
033879	B17-22	033934	B17-15	034221	B17-10	034275	B17-18
033880	B17-22	033937	B17-30	034225	B17-10	034276	B17-18
033881	B17-22	033938	B17-30	034226	B17-10	034277	B17-18
033882	B17-22	033939	B17-30	034227	B17-10	034278	B17-18
033883	B17-22	033940	B17-30	034228	B17-10	034279	B17-18
033884	B17-22	033952	B17-30	034229	B17-10	034280	B17-18
033885	B17-22	033953	B17-30	034230	B17-10	034281	B17-18
033886	B17-22	033954	B17-30	034231	B17-10	034282	B17-18
033887	B17-22	033955	B17-30	034232	B17-10	034283	B17-18
033888	B17-22	033960	B17-29	034233	B17-10	034284	B17-18
033890	B17-31	033961	B17-29	034234	B17-10	034285	B17-18
033891	B17-31	033962	B17-29	034235	B17-10	034286	B17-18
033892	B17-31	033963	B17-29	034236	B17-10	034287	B17-18
033893	B17-31	033964	B17-29	034237	B17-10	034288	B17-18
033894	B17-31	033965	B17-29	034238	B17-10	034289	B17-18
033895	B17-31	033966	B17-29	034239	B17-10	034290	B17-18
033896	B17-31	033967	B17-29	034240	B17-10	034291	B17-18
033897	B17-31	033968	B17-29	034241	B17-10	034292	B17-18
033899	B17-15	033974	B17-10	034242	B17-10	034293	B17-20
033900	B17-31	033977	B17-10	034243	B17-10	034294	B17-20
033901	B17-31	033978	B17-10	034244	B17-12	034295	B17-20
033902	B17-31	033979	B17-10	034245	B17-12	034296	B17-20
033903	B17-31	033980	B17-10	034246	B17-12	034297	B17-20
033904	B17-31	033982	B17-10	034247	B17-12	034298	B17-20
033905	B17-31	033983	B17-10	034248	B17-12	034299	B17-20
033906	B17-31	033984	B17-10	034249	B17-12	034300	B17-20
033907	B17-31	033986	B17-10	034250	B17-12	034303	B17-20
033910	B17-22	033987	B17-10	034251	B17-12	034304	B17-20
033911	B17-22	033988	B17-10	034252	B17-12	034305	B17-20
033912	B17-22	033990	B17-10	034253	B17-12	034306	B17-20
033913	B17-22	033991	B17-10	034254	B17-12	034307	B17-20
033914	B17-22	033992	B17-10	034255	B17-12	034308	B17-20
033915	B17-22	033993	B17-10	034256	B17-12	034309	B17-20
033916	B17-22	033994	B17-10	034257	B17-12	034310	B17-20
033917	B17-22	033996	B17-10	034258	B17-12	034313	B17-22
033918	B17-22	033997	B17-10	034259	B17-12	034314	B17-22

PART NUMBER INDEX

DODGE®

Part Number	Page
034315	B17-22
034316	B17-22
034317	B17-22
034318	B17-22
034319	B17-22
034320	B17-22
034321	B17-22
034322	B17-22
034323	B17-22
034324	B17-22
034325	B17-22
034326	B17-22
034327	B17-22
034328	B17-22
034329	B17-22
034330	B17-22
034331	B17-22
034332	B17-22
034438	B17-28
034439	B17-28
034440	B17-28
034441	B17-28
034442	B17-28
034443	B17-28
034444	B17-28
034445	B17-28
034446	B17-28
034447	B17-28
034448	B17-28
034449	B17-28
034450	B17-28
034451	B17-28
034452	B17-28
034453	B17-28
034454	B17-26
034455	B17-26
034456	B17-26
034457	B17-26
034458	B17-26
034459	B17-26
034460	B17-26
034461	B17-26
034462	B17-26
034463	B17-26
034464	B17-26
034465	B17-26
034466	B17-26
034467	B17-26
034468	B17-26
034469	B17-26
034470	B17-26
034471	B17-26
034472	B17-26
034473	B17-26
034525	B17-26
034596	B17-12
034597	B17-12
034598	B17-12
034599	B17-12
034700	B2-71
034701	B2-71
034702	B2-71
034703	B2-71
034704	B2-71
034705	B2-71
034706	B2-71
034709	B2-71
034710	B2-72
034711	B2-72
034712	B2-72
034713	B2-72
034714	B2-72
034715	B2-72
034716	B2-75
034717	B2-75
034718	B2-75
034719	B2-75
034720	B2-75
034721	B2-75
034722	B2-75
034725	B2-75
034726	B2-73
034727	B2-73
034728	B2-73
034729	B2-73
034730	B2-73
034731	B2-73
034732	B2-73
034735	B2-73
034736	B2-74
034737	B2-74
034738	B2-74
034739	B2-74
034740	B2-74
034741	B2-74
034748	B2-71
034749	B2-71
034750	B2-71
034751	B2-71
034752	B2-71
034754	B2-71
034755	B2-72
034756	B2-72
034757	B2-72
034758	B2-72
034759	B2-75
034760	B2-75
034761	B2-75
034762	B2-75
034763	B2-75
034765	B2-75
034766	B2-73
034767	B2-73
034768	B2-73
034769	B2-73
034770	B2-73
034772	B2-73
034773	B2-74
034774	B2-74
034775	B2-74
034776	B2-74
035025	B17-51
035026	B17-51
035027	B17-51
035028	B17-51
035029	B17-51
035030	B17-51
035031	B17-52
035032	B17-52
035033	B17-52
035034	B17-52
035035	B17-52
035036	B17-52
035083	B17-52
035107	B17-51
035108	B17-51
035116	B17-52
035117	B17-52
035183	B15-85
035185	B15-85
035417	B15-85
035418	B15-85
035431	B15-95
035432	B15-95
035433	B15-95
035437	B15-112
035438	B15-112
035439	B15-112
035744	B15-113, B15-119
035745	B15-113, B15-119
035747	B15-113, B15-119
035748	B15-113, B15-119
035749	B15-113, B15-119
035750	B15-113, B15-119
035751	B15-113, B15-119
035752	B15-113, B15-119
035762	B15-50
035763	B15-50
035764	B15-50
035765	B15-50
035766	B15-50
035767	B15-50
035768	B15-50
035769	B15-50
035770	B15-50
035771	B15-51
035772	B15-51
035773	B15-51
035774	B15-51
035775	B15-50
035776	B15-50
035777	B15-50
035778	B15-50
035779	B15-50
035780	B15-50
035781	B15-51
035782	B15-51
035783	B15-51
035784	B15-51
035785	B15-51
035786	B15-51
035787	B15-51
035788	B15-51
035789	B15-51
035790	B15-51
035791	B15-51
035915	B15-112
035916	B15-112
035917	B15-112
035929	B15-95
035930	B15-95
035931	B15-95
035943	B15-85
035944	B15-85
035945	B15-85
035946	B15-85
036054	B11-17
036116	B11-17
036118	B11-17
036119	B11-17
036120	B11-17
036121	B11-17
036180	B19-45
036181	B19-45

PART NUMBER INDEX

DODGE®

Part Number	Page
036182	B19-45
036183	B19-45
036184	B19-45
036185	B19-45
036186	B19-45
036187	B19-45
036188	B19-45
036193	B19-45
036194	B19-45
036196	B19-45
036197	B19-45
036198	B19-45
036199	B19-45
036200	B19-45
036270	B19-45
036274	B19-45
036350	B19-21
036351	B19-21
036352	B19-21
036353	B19-21
036354	B19-21
036355	B19-21
036356	B19-21
036357	B19-21
036358	B19-21
036359	B19-21
036360	B19-21
036361	B19-21
036362	B19-21
036363	B19-21
036364	B19-21
036365	B19-21
036366	B19-21
036367	B19-21
036567	B5-20
037001	B17-48
037010	B17-48
037002	B17-48
037011	B17-48
037003	B17-48
037012	B17-48
037004	B17-48
037005	B17-48
037013	B17-48
037006	B17-48
037007	B17-48
037017	B17-48
037009	B17-48
037020	B17-48
037022	B17-48
037024	B17-48
037026	B17-48
037426	B15-84
037427	B15-84
037428	B15-84, B15-85
037429	B15-85
037430	B15-85
037431	B15-85
037432	B15-84
037433	B15-84
037434	B15-84
037435	B15-84
037436	B15-84, B15-85
037437	B15-84, B15-85
037438	B15-85
037439	B15-85
037440	B15-85
037441	B15-85
037442	B15-84
037443	B15-84
037444	B15-84
037446	B15-84
037447	B15-84
037448	B15-84
037449	B15-84, B15-85
037450	B15-84, B15-85
037451	B15-85
037452	B15-85
037461	B15-84
037462	B15-84
037464	B15-84
037465	B15-84
037540	B10-59
037541	B10-59
037542	B10-59
037543	B10-59
037544	B10-59
037545	B10-59
037546	B10-59
037547	B10-59
037548	B10-61, B10-67
037549	B10-61
037550	B10-61, B10-67
037551	B10-61, B10-67
037552	B10-61, B10-67
037553	B10-61, B10-67
037554	B10-61, B10-67
037555	B10-59
037556	B10-59
037557	B10-59
037558	B10-59
037559	B10-59
037560	B10-59
037561	B10-59
037562	B10-59
037563	B10-61
037564	B10-61
037565	B10-61
037566	B10-61
037567	B10-61
037568	B10-61
037569	B10-61
037580	B10-59
037581	B10-59
037582	B10-59
037583	B10-59
037584	B10-59
037585	B10-59
037586	B10-59
037587	B10-59
037588	B10-59
037589	B10-59
037590	B10-59
037591	B10-59
037592	B10-59
037593	B10-59
037594	B10-59
037595	B10-59
037596	B10-59
037597	B10-59
037598	B10-59
037599	B10-59
037600	B10-59
037601	B10-59
037602	B10-59
037603	B10-59
037604	B10-61
037605	B10-61
037606	B10-61
037607	B10-61
037608	B10-61
037609	B10-61
037610	B10-61
037611	B10-61
037612	B10-61
037613	B10-61
037614	B10-61
037615	B10-61
037616	B10-61
037617	B10-61
037618	B10-61
037619	B10-61
037620	B10-61
037621	B10-61
037622	B10-61
037623	B10-61
037624	B10-61
037625	B10-61
037626	B10-61
037627	B10-61
037628	B10-61
037629	B10-61
037630	B10-61
037631	B10-61
037632	B10-59, B10-63
037633	B10-59, B10-63
037634	B10-59, B10-63
037635	B10-59, B10-63
037636	B10-59, B10-61, B10-63
037637	B10-59, B10-61, B10-63
037638	B10-59, B10-61, B10-63
037639	B10-59, B10-61, B10-63
037640	B10-59, B10-61, B10-63
037641	B10-59, B10-61, B10-63
037642	B10-59, B10-61, B10-63
037643	B10-59, B10-61, B10-63
037644	B10-61, B10-63
037645	B10-61, B10-63
037646	B10-61, B10-63
037647	B10-61, B10-63
037648	B10-61, B10-63
037649	B10-61, B10-63
037650	B10-64
037651	B10-64
037652	B10-64
037653	B10-64
037654	B10-64
037655	B10-64
037656	B10-64
037657	B10-64
037658	B10-64
037659	B10-64
037660	B10-64
037673	B10-64
037674	B10-64
037681	B10-66

PART NUMBER INDEX

Part Number	Page
037682	B10-66
037683	B10-66
037684	B10-66
037685	B10-66
037686	B10-66
037687	B10-66
037688	B10-66
037689	B10-66
037690	B10-66
037850	B14-54
037851	B14-54
037852	B14-54
037853	B14-54
037854	B14-54
037855	B14-54
037856	B14-54
037857	B14-54
037901	B14-54
037902	B14-54
037903	B14-54
037904	B14-54
037905	B14-54
037906	B14-54
037907	B14-54
037908	B14-54
037909	B14-54
037910	B14-54
037911	B14-54
037912	B14-54
037913	B14-54
037914	B14-54
037915	B14-54
037916	B14-54
037917	B14-54
037918	B14-54
037919	B14-54
037920	B14-54
037921	B14-54
037922	B14-54
037923	B14-54
037924	B14-54
037925	B14-102
037926	B14-102
037927	B14-102
037928	B14-102
037929	B14-102
037930	B14-102
037931	B14-102
037932	B14-102
037933	B14-102
037934	B14-102
037935	B14-102
037936	B14-102
037937	B14-102
037938	B14-102
037939	B14-102
037940	B14-102
038060	B19-12
038061	B19-12
038062	B19-12
038063	B19-12
038064	B19-12
038070	B19-12
038071	B19-12
038072	B19-12
038073	B19-12
038074	B19-12
038075	B19-12
038076	B19-12
038077	B19-12
038078	B19-12
038109	B19-8
038110	B19-8
038111	B19-8
038112	B19-8
038113	B19-8
038114	B19-8
038115	B19-8
038116	B19-8
038117	B19-8
038118	B19-8
038119	B19-8
038200	B19-11
038201	B19-11
038202	B19-11
038203	B19-11
038204	B19-11
038205	B19-11
038206	B19-11
038207	B19-11
038208	B19-11
038209	B19-11
038210	B19-11
038211	B19-11
038212	B19-11
038213	B19-11
038214	B19-11
038215	B19-11
038216	B19-11
038217	B19-11
038218	B19-11
038219	B19-11
038220	B19-11
038221	B19-11
038222	B19-11
038223	B19-11
038224	B19-11
038225	B19-11
038226	B19-11
038227	B19-11
038228	B19-11
038229	B19-11
038910	B19-31, B19-32
038911	B19-31, B19-32
038912	B19-31, B19-32
038913	B19-31, B19-32
038914	B19-31, B19-32
038915	B19-31, B19-32
038916	B19-31, B19-32
038917	B19-31, B19-32
038918	B19-31, B19-32
038919	B19-31, B19-32
038920	B19-31, B19-32
038921	B19-31, B19-32
038922	B19-31, B19-32
038923	B19-31, B19-32
038924	B19-31, B19-32
038925	B19-31, B19-32
038926	B19-31, B19-32
038927	B19-31, B19-32
038928	B19-31, B19-32
038929	B19-31, B19-32
038930	B19-31, B19-32
038932	B19-31, B19-32
039002	B19-31, B19-32
039003	B19-31, B19-32
039004	B19-31, B19-32
039005	B19-31, B19-32
039006	B19-31, B19-32
039007	B19-31, B19-32
039008	B19-31, B19-32
039009	B19-31, B19-32
039010	B19-31, B19-32
039011	B19-31, B19-32
039012	B19-31, B19-32
039013	B19-31, B19-32
039014	B19-31, B19-32
039015	B19-31, B19-32
039016	B19-31, B19-32
039017	B19-31, B19-32
039018	B19-31, B19-32
039019	B19-31, B19-32
039043	B19-31, B19-32
039044	B19-31, B19-32
039073	B19-31, B19-32
039084	B19-31, B19-32
039097	B19-31, B19-32
039100	B15-48
039101	B15-48
039102	B15-48
039103	B15-48
039104	B15-48
039105	B15-48
039106	B15-48
039107	B15-48
039108	B15-48
039109	B15-49
039110	B15-49
039111	B15-49
039112	B15-49
039113	B15-48
039114	B15-48
039115	B15-48
039116	B15-48
039117	B15-48
039118	B15-48
039119	B15-49
039120	B15-49
039121	B15-49
039122	B15-49
039123	B15-49
039124	B15-49
039125	B15-49
039126	B15-49
039127	B15-49
039128	B15-49
039129	B15-49
039138	B15-33
039141	B15-33
039142	B15-33
039147	B15-33
039148	B15-33
039151	B15-33
039152	B15-33
039155	B15-33
039156	B15-33
039159	B15-33
039160	B15-33
039163	B15-33
039164	B15-34
039165	B15-34
039166	B15-34
039167	B15-34
039168	B15-34

PART NUMBER INDEX

DODGE®

Part Number	Page
039169	B15-34
039170	B15-34
039171	B15-34
039172	B15-34
039173	B15-34
039174	B15-34
039175	B15-101
039177	B15-101
039179	B15-101
039181	B15-101
039183	B15-101
039185	B15-101
039187	B15-101
039189	B15-101
039191	B15-101
039193	B15-101
039195	B15-101
039197	B15-101
039199	B15-101
039201	B15-101
039203	B15-101
039205	B15-101
039207	B15-101
039209	B15-101
039211	B15-101
039213	B15-101
039215	B15-101
039217	B15-33, B15-35
039218	B15-33, B15-35
039219	B15-33, B15-35
039220	B15-33, B15-35
039221	B15-33, B15-35
039222	B15-33, B15-35
039223	B15-33, B15-35
039224	B15-33, B15-34, B15-35
039225	B15-34, B15-35
039226	B15-34, B15-35
039227	B15-34, B15-35
039228	B15-34, B15-35
039289	B15-103,B15-106, B15-113, B15-119
039290	B15-119
039291	B15-103, B15-106, B15-113, B15-119
039292	B15-103, B15-106, B15-113, B15-119
039297	B15-103, B15-106, B15-115, B15-119
039355	B15-112
039356	B15-112
039357	B15-112
039358	B15-112
039359	B15-112
039360	B15-112
039361	B15-112
039362	B15-112
039371	B15-112
039372	B15-112
039373	B15-112
039374	B15-112
039375	B15-112
039376	B15-112
039377	B15-114
039378	B15-114
039380	B15-114
039381	B15-114
039382	B15-114
039383	B15-114
039384	B15-114
039385	B15-114
039386	B15-114
039404	B15-95
039405	B15-95
039406	B15-95
039407	B15-95
039413	B15-95
039414	B15-95
039415	B15-95
039416	B15-95
039417	B15-95
039419	B15-95
039420	B15-95
039421	B15-95
039422	B15-95
039423	B15-95
039424	B15-95
039425	B15-95
039426	B15-95
039427	B15-95
039508	B15-32, B15-35
039509	B15-32, B15-35
039515	B15-103, B15-106, B15-113, B15-119
039530	B15-27, B15-32, B15-41, B15-54, B15-95
039538	B15-27, B15-32, B15-41, B15-54, B15-95
039544	B15-32, B15-35
039545	B15-32, B15-35
039553	B15-95
039568	B15-103, B15-106, B15-113
039575	B15-32
039576	B15-32
039577	B15-32
039578	B15-32
039579	B15-26
039580	B15-32
039581	B15-32
039582	B15-32, B15-95
039583	B15-32, B15-95
039584	B15-32
039585	B15-32
039586	B15-32
039587	B15-32
039588	B15-32
039589	B15-32
039590	B15-32
039591	B15-32
039592	B15-32
039593	B15-32
039594	B15-32
039595	B15-32
039596	B15-32
039597	B15-33
039598	B15-33
039599	B15-33
039600	B15-33
039601	B15-33
039602	B15-33
039603	B15-33
039604	B15-33
039605	B15-33
039606	B15-28
039665	B15-32, B15-35
039666	B15-32, B15-35
039667	B15-32, B15-35
039668	B15-32, B15-35
039669	B15-26, B15-35, B15-48, B15-50, B15-52, B15-77
039670	B15-32, B15-35
039671	B15-32, B15-35
039672	B15-32, B15-35
039673	B15-32, B15-35
039674	B15-32, B15-35
039675	B15-32, B15-33, B15-35
039676	B15-32, B15-33, B15-35
039677	B15-33, B15-35
039678	B15-33, B15-35
039679	B15-33, B15-35
039680	B15-33, B15-35
039681	B15-28, B15-35
039682	B15-101
039684	B15-101
039686	B15-101
039688	B15-101
039690	B15-101
039692	B15-101
039694	B15-101
039696	B15-101
039698	B15-101
039700	B15-101
039702	B15-101
039704	B15-101
039706	B15-101
039708	B15-101
039710	B15-101
039711	B15-101
039712	B15-101
039713	B15-101
039714	B15-101
039715	B15-101
039716	B15-101
039717	B15-112
039719	B15-112
039721	B15-112
039723	B15-112
039725	B15-112
039727	B15-112
039729	B15-112
039731	B15-112
039733	B15-112
039735	B15-112
039737	B15-112
039739	B15-112
039741	B15-112
039743	B15-112
039745	B15-114
039747	B15-114
039749	B15-114
039750	B15-114
039751	B15-114
039752	B15-114
039753	B15-114
039754	B15-114
039755	B15-114
039760	B15-95
039762	B15-35, B15-95

PART NUMBER INDEX

Part Number	Page
039764	B15-95
039766	B15-95
039768	B15-95
039770	B15-95
039772	B15-95
039774	B15-95
039776	B15-95
039780	B15-95
039781	B15-95
039782	B15-95
039783	B15-95
039784	B15-95
039785	B15-95
039852	B15-27, B15-32, B15-41
039853	B15-27, B15-32, B15-41
039854	B15-27, B15-32, B15-41
039855	B15-27, B15-32, B15-41, B15-95
039856	B15-27, B15-32, B15-41
039857	B15-27, B15-32, B15-41, B15-103, B15-106, B15-113, B15-119
039858	B15-27, B15-32, B15-41
039859	B15-29, B15-32, B15-41, B15-54, B15-95
039860	B15-29, B15-33, B15-41
039861	B15-29, B15-33, B15-41, B15-54
039862	B15-29, B15-33, B15-41
039863	B15-29, B15-33, B15-41, B15-95, B15-103, B15-106, B15-115, B15-119
039864	B15-29, B15-33, B15-41, B15-54, B15-95
039865	B15-29, B15-33, B15-41
039866	B15-29, B15-33, B15-41, B15-54, B15-95
039867	B15-29, B15-33, B15-41
040001	B17-53
040002	B17-53
040003	B17-53
040004	B17-53
040005	B17-53
040006	B17-53
040007	B17-53
040008	B17-53
040009	B17-53
040010	B17-53
040011	B17-53
040012	B17-53
040013	B17-53
040014	B17-53
040015	B17-53
040016	B17-53
040017	B17-53
040018	B17-53
040019	B17-53
040020	B17-53
040021	B17-53
040022	B17-53
040023	B17-53
040024	B17-53
040025	B17-53
040026	B17-53
040027	B17-53
040028	B17-53
040029	B17-53
040030	B17-53
040031	B17-53
040032	B17-53
040033	B17-53
040034	B17-53
040681	B15-29, B15-41, B15-69, B15-95, B15-103, B15-106, B15-115, B15-119
040682	B15-29, B15-41, B15-69, B15-103, B15-106, B15-115, B15-119
040683	B15-29, B15-41, B15-69, B15-95, B15-103, B15-106
040684	B15-29, B15-41, B15-69, B15-103, B15-106
040685	B15-29, B15-31, B15-41, B15-69
040687	B15-106
040689	B15-31
040690	B15-29, B15-33, B15-41, B15-69
040691	B15-41, B15-69, B15-103, B15-115
040700	B15-27, B15-41, B15-48, B15-50, B15-113, B15-119
040701	B15-27, B15-41, B15-48, B15-50, B15-95, B15-113, B15-119
040702	B15-27, B15-41, B15-48, B15-50, B15-69, B15-95, B15-113, B15-119
040703	B15-27, B15-41, B15-48, B15-50, B15-69, B15-95, B15-113, B15-119
040704	B15-27, B15-41, B15-48, B15-50, B15-69, B15-95
040705	B15-27, B15-41, B15-48, B15-50, B15-69, B15-95, B15-103, B15-106, B15-113, B15-119
040706	B15-27, B15-41, B15-48, B15-49, B15-50, B15-51, B15-69, B15-95, B15-103, B15-106, B15-113, B15-119
040707	B15-27, B15-41, B15-49, B15-51, B15-69
040708	B15-29, B15-41, B15-49, B15-51, B15-69, B15-95
040709	B15-29, B15-41, B15-49, B15-51, B15-69, B15-103, B15-106, B15-115, B15-119
040710	B15-29, B15-41, B15-49, B15-51, B15-69, B15-95, B15-103, B15-106, B15-115, B15-119
040711	B15-29, B15-41, B15-49, B15-51, B15-69, B15-95, B15-103, B15-106, B15-115, B15-119
040712	B15-29, B15-41, B15-49, B15-51, B15-69, B15-95, B15-103, B15-106, B15-115, B15-119
040713	B15-29, B15-41, B15-69, B15-95, B15-103, B15-106, B15-115, B15-119
040714	B15-29, B15-41, B15-69, B15-95
040830	B15-85, B15-93
040838	B15-101, B15-111
040850	B15-125
040890	B15-27, B15-32, B15-41, B15-69
040891	B15-27, B15-32, B15-41, B15-69
040892	B15-27, B15-32, B15-41, B15-69
040893	B15-29, B15-33, B15-41, B15-69
040894	B15-29, B15-33, B15-41, B15-69
040895	B15-29, B15-33, B15-41, B15-69
040896	B15-29, B15-33, B15-41, B15-69
040897	B15-31, B15-34, B15-41, B15-69
040898	B15-31, B15-34, B15-41, B15-69
040899	B15-41, B15-69, B15-84, B15-91
040900	B15-31, B15-34, B15-41, B15-69, B15-84, B15-91
040901	B15-31, B15-34, B15-41, B15-69, B15-84, B15-91

PART NUMBER INDEX

DODGE®

Part Number	Page
040918	B15-27, B15-32, B15-41, B15-69
040919	B15-29, B15-33, B15-41, B15-69
040995	B15-31, B15-34, B15-41, B15-69, B15-84, B15-91
041064	B15-101, B15-111, B15-114, B15-124
041065	B15-101, B15-111, B15-114, B15-124
041066	B15-101, B15-111, B15-114, B15-124
041067	B15-101, B15-111, B15-114, B15-124
041068	B15-101, B15-111, B15-114, B15-124
041069	B15-101, B15-111
041070	B15-101, B15-111
041071	B15-101, B15-111, B15-114, B15-124
041072	B15-101, B15-111, B15-114, B15-124
041082	B15-31, B15-34, B15-41, B15-69
041161	B15-45, B15-125
041172	B15-45, B15-125
041173	B15-45, B15-125
041174	B15-45, B15-125
041175	B15-45, B15-125
041176	B15-45, B15-125
041177	B15-45, B15-125
041178	B15-45, B15-125
041179	B15-45, B15-125
041180	B15-45, B15-125
041181	B15-45, B15-125
041182	B15-45, B15-125
041183	B15-45, B15-125
041184	B15-45, B15-125
041185	B15-45, B15-125
041186	B15-45, B15-125
041213	B15-45, B15-125
041628	B15-30
041646	B15-29, B15-33, B15-41, B15-69
041685	B15-41
041686	B15-41
041687	B15-27, B15-32, B15-41, B15-69
041688	B15-27, B15-32, B15-41, B15-69
041860	B15-26
041861	B15-26
041862	B15-26
041863	B15-26
041864	B15-26
041865	B15-26
041866	B15-26
041867	B15-26
041868	B15-28
041869	B15-28
041870	B15-28
041871	B15-28
041872	B15-28
041873	B15-28
041874	B15-28
041875	B15-28
041876	B15-28
041877	B15-28
041878	B15-28
041879	B15-28
041880	B15-28
041881	B15-28
041882	B15-28
041883	B15-28
041884	B15-28
041885	B15-28
041886	B15-28
041887	B15-30
041987	B15-45, B15-125
042001	B15-64
042002	B15-64
042003	B15-64
042004	B15-64
042005	B15-64
042006	B15-64
042007	B15-64
042008	B15-64
042009	B15-64
042010	B15-64
042011	B15-64
042015	B15-65
042016	B15-65
042017	B15-65
042019	B15-65
042020	B15-65
042021	B15-65
042022	B15-65
042023	B15-65
042024	B15-65
042025	B15-65
042028	B15-103, B15-106
042029	B15-103, B15-106
042030	B15-65
042031	B15-103, B15-106, B15-115, B15-119
042032	B15-103, B15-106, B15-115, B15-119
042036	B15-31, B15-34, B15-41, B15-69, B15-84, B15-91
042037	B15-84, B15-91
042038	B15-84, B15-91
042039	B15-84, B15-91
042040	B15-84, B15-91
042049	B15-103, B15-106, B15-115, B15-119
042085	B15-103, B15-106, B15-115, B15-119
042088	B15-103, B15-106, B15-113, B15-119
042089	B15-103, B15-106, B15-113, B15-119
042090	B15-85, B15-91
042091	B15-85, B15-91
042092	B15-85, B15-91
042093	B15-85, B15-91
042094	B15-85, B15-91
042095	B15-85, B15-91
042098	B15-103, B15-106, B15-115, B15-119
042100	B15-67
042103	B15-67
042106	B15-67
042109	B15-67
042111	B15-67
042114	B15-67
042116	B15-67
042119	B15-67
042121	B15-67
042124	B15-67
042126	B15-67
042129	B15-67
042131	B15-67
042134	B15-67
042137	B15-67
042140	B15-67
042143	B15-67
042146	B15-67
042149	B15-67
042152	B15-67
042155	B15-67
042158	B15-67
042161	B15-67
042164	B15-67
042167	B15-67
042193	B15-27, B15-32, B15-41, B15-50, B15-52, B15-113, B15-119
042199	B15-27, B15-32, B15-41, B15-50, B15-52, B15-95, B15-113, B15-119
042220	B15-103, B15-106
042221	B15-103, B15-106
042248	B15-103, B15-106, B15-115, B15-119
042249	B15-103, B15-106, B15-115, B15-119
042270	B15-65
042271	B15-65
042272	B15-65
042273	B15-65
042274	B15-65
042282	B15-65
042283	B15-65
042284	B15-65
042303	B15-65
042304	B15-65
042305	B15-65
042306	B15-65
042307	B15-65
042308	B15-65
042309	B15-65
042315	B15-45, B15-125
042316	B15-45, B15-52, B15-125
042335	B15-45, B15-125
042368	B15-31, B15-41, B15-69
042369	B15-31, B15-41, B15-69
042370	B15-65
042371	B15-65
042372	B15-65
042373	B15-65
042374	B15-65
042375	B15-65
042376	B15-65
042377	B15-65
042378	B15-65
042379	B15-65

PART NUMBER INDEX

Part Number	Page
042380	B15-27, B15-32, B15-41, B15-54, B15-69
042381	B15-27, B15-32, B15-41, B15-69
042382	B15-27, B15-32, B15-41, B15-54, B15-69
042383	B15-29, B15-32, B15-41, B15-54, B15-69
042384	B15-29, B15-33, B15-41, B15-54, B15-69
042385	B15-29, B15-33, B15-41, B15-54, B15-69
042386	B15-29, B15-33, B15-41, B15-69
042387	B15-29, B15-33, B15-41, B15-54, B15-69
042388	B15-29, B15-41, B15-69
042389	B15-29, B15-33, B15-41, B15-54, B15-69
042390	B15-29, B15-33, B15-41, B15-69
042391	B15-29, B15-33, B15-41, B15-69
042392	B15-29, B15-33, B15-41, B15-54, B15-69
042393	B15-29, B15-33, B15-41, B15-69
042394	B15-31, B15-34, B15-41, B15-69
042395	B15-31, B15-34, B15-41, B15-69
042396	B15-31, B15-34, B15-41, B15-69, B15-84, B15-91
042397	B15-41, B15-69
042400	B15-61
042401	B15-61
042402	B15-61
042403	B15-61
042404	B15-61
042405	B15-61
042406	B15-26
042407	B15-61
042408	B15-61
042409	B15-26
042410	B15-61
042411	B15-61
042412	B15-61
042413	B15-61
042414	B15-61
042415	B15-61
042416	B15-61
042417	B15-61
042420	B15-61
042421	B15-61
042422	B15-26
042423	B15-26
042424	B15-61
042425	B15-61
042428	B15-61
042430	B15-61
042431	B15-28
042432	B15-61
042433	B15-61
042436	B15-61
042438	B15-28
042439	B15-61
042440	B15-61
042443	B15-61
042445	B15-28
042446	B15-61
042447	B15-30
042448	B15-30
042449	B15-30
042450	B15-61
042453	B15-30
042454	B15-30
042455	B15-61
042458	B15-30
042460	B15-61
042463	B15-30
042464	B15-30
042465	B15-61
042468	B15-61
042469	B15-61
042472	B15-61
042477	B15-61
042510	B15-31, B15-34, B15-41, B15-69, B15-84, B15-91
042511	B15-31, B15-34, B15-41, B15-69
042512	B15-27, B15-32, B15-41, B15-50, B15-52, B15-69, B15-95, B15-113, B15-119
042513	B15-27, B15-32, B15-41, B15-50, B15-52, B15-69, B15-95
042514	B15-27, B15-32, B15-41, B15-50, B15-52, B15-54, B15-69, B15-95
042515	B15-27, B15-32, B15-41, B15-50, B15-69
042516	B15-27, B15-32, B15-41, B15-50, B15-52, B15-69, B15-95
042517	B15-27, B15-32, B15-41, B15-50, B15-69
042518	B15-27, B15-32, B15-41, B15-50, B15-52, B15-54, B15-69, B15-95
042519	B15-27, B15-32, B15-41, B15-51, B15-69, B15-103, B15-106, B15-113, B15-119
042520	B15-27, B15-32, B15-41, B15-51, B15-52, B15-69
042521	B15-29, B15-32, B15-41, B15-51, B15-52, B15-54, B15-69, B15-95
042522	B15-29, B15-33, B15-41, B15-51, B15-69
042523	B15-29, B15-33, B15-41, B15-51, B15-52, B15-54, B15-69
042524	B15-29, B15-33, B15-41, B15-51, B15-69
042525	B15-29, B15-33, B15-41, B15-51, B15-69, B15-95, B15-103, B15-106, B15-115, B15-119
042526	B15-29, B15-33, B15-41, B15-51, B15-54, B15-69, B15-95
042527	B15-29, B15-33, B15-41, B15-51, B15-69, B15-103, B15-106, B15-115, B15-119
042528	B15-29, B15-33, B15-41, B15-51, B15-54, B15-69, B15-95, B15-103, B15-106, B15-115, B15-119
042529	B15-29, B15-33, B15-41, B15-51, B15-69
042530	B15-29, B15-33, B15-41, B15-69, B15-95
042531	B15-29, B15-33, B15-41, B15-69, B15-95
042532	B15-29, B15-33, B15-41, B15-69
042533	B15-29, B15-33, B15-41, B15-54, B15-69, B15-95
042534	B15-29, B15-33, B15-41, B15-69, B15-95
042535	B15-29, B15-33, B15-41, B15-69, B15-103, B15-106, B15-115, B15-119
042536	B15-29, B15-33, B15-41, B15-69
042537	B15-29, B15-33, B15-41, B15-54, B15-69, B15-95
042538	B15-29, B15-33, B15-41, B15-69, B15-95, B15-103, B15-106, B15-115, B15-119

PART NUMBER INDEX

DODGE®

Part Number	Page
042539	B15-29, B15-33, B15-41, B15-69
042540	B15-29, B15-33, B15-41, B15-69
042541	B15-31, B15-34, B15-41, B15-69
042542	B15-31, B15-34, B15-41, B15-69
042543	B15-31, B15-34, B15-41, B15-69
042544	B15-31, B15-34, B15-41, B15-69, B15-84, B15-91
042545	B15-31, B15-34, B15-41, B15-69, B15-84, B15-91
042547	B15-113
042562	B15-33
042568	B15-61
042569	B15-61
042570	B15-61
042571	B15-61
042572	B15-61
042573	B15-61
042574	B15-61
042575	B15-61
042576	B15-61
042577	B15-61
042578	B15-61
042579	B15-61
042580	B15-61
042581	B15-61
042594	B15-34, B15-69
042627	B10-61
042628	B10-61, B10-67
042629	B10-61
042630	B10-61, B10-67
042631	B10-61
042632	B10-61
042633	B10-61
042634	B10-61, B10-67
043015	B15-26
043048	B15-26
043109	B15-29, B15-33, B15-41, B15-69
043248	B15-26
043249	B15-26
043386	B15-29, B15-33, B15-41, B15-69
043393	B15-77, B15-81
043400	B15-77, B15-81
043401	B15-77
043402	B15-77, B15-81
043403	B15-77, B15-81
043404	B15-77, B15-81
043405	B15-77, B15-81
043406	B15-77, B15-81
043407	B15-77, B15-81
043408	B15-77, B15-81
043410	B15-77, B15-81
043411	B15-77, B15-81
043412	B15-77, B15-81
043421	B15-77
043501	B15-77, B15-80
043502	B15-77, B15-80
043504	B15-77, B15-80
043506	B15-77, B15-80
043508	B15-77, B15-80
043509	B15-77, B15-80
043511	B15-77, B15-80
043512	B15-77, B15-80
043513	B15-77, B15-80
043514	B15-77, B15-80
043516	B15-77, B15-80
043519	B15-77, B15-80
043520	B15-77, B15-80
043521	B15-77, B15-80
043522	B15-80
043538	B15-31, B15-34, B15-41, B15-69, B15-84, B15-91
043540	B15-27, B15-32, B15-41, B15-48, B15-69, B15-95, B15-113, B15-119
043541	B15-27, B15-32, B15-41, B15-48, B15-69, B15-95
043542	B15-27, B15-32, B15-41, B15-48, B15-54, B15-69, B15-95
043543	B15-27, B15-32, B15-41, B15-48, B15-69
043544	B15-27, B15-32, B15-41, B15-48, B15-69, B15-95
043545	B15-27, B15-32, B15-41, B15-48, B15-69
043546	B15-27, B15-32, B15-41, B15-48, B15-54, B15-69, B15-95
043547	B15-27, B15-32, B15-41, B15-49, B15-69, B15-103, B15-106, B15-119
043548	B15-27, B15-32, B15-41, B15-49, B15-69
043549	B15-29, B15-32, B15-41, B15-49, B15-54, B15-69, B15-95
043550	B15-29, B15-33, B15-41, B15-49, B15-69
043551	B15-29, B15-33, B15-41, B15-49, B15-54, B15-69
043552	B15-29, B15-33, B15-41, B15-49, B15-69
043553	B15-29, B15-33, B15-41, B15-49, B15-69, B15-95, B15-103, B15-106, B15-115, B15-119
043554	B15-29, B15-33, B15-41, B15-49, B15-54, B15-69, B15-95
043555	B15-29, B15-33, B15-41, B15-49, B15-69, B15-103, B15-106, B15-115, B15-119
043556	B15-29, B15-33, B15-41, B15-49, B15-54, B15-69, B15-95, B15-103, B15-106, B15-115, B15-119
043557	B15-29, B15-33, B15-41, B15-49, B15-69
043558	B15-29, B15-33, B15-41, B15-69, B15-95
043559	B15-29, B15-33, B15-41, B15-69, B15-95
043560	B15-29, B15-33, B15-41, B15-54, B15-69, B15-95
043561	B15-29, B15-33, B15-41, B15-69, B15-95
043562	B15-29, B15-41, B15-69, B15-103, B15-106, B15-115, B15-119
043563	B15-29, B15-33, B15-41, B15-69
043564	B15-29, B15-33, B15-41, B15-54, B15-69, B15-95
043565	B15-29, B15-33, B15-41, B15-69, B15-95, B15-103, B15-106, B15-115, B15-119
043566	B15-29, B15-33, B15-41, B15-69
043567	B15-29, B15-33, B15-41, B15-69
043568	B15-31, B15-34, B15-41, B15-69
043569	B15-31, B15-34, B15-41, B15-69
043570	B15-31, B15-34, B15-41, B15-69
043571	B15-31, B15-34, B15-41, B15-69, B15-84, B15-91
043572	B15-31, B15-34, B15-41, B15-69, B15-84, B15-91
043573	B15-31, B15-34, B15-41, B15-69
043574	B15-29, B15-33, B15-41, B15-69
043575	B15-31, B15-34, B15-41, B15-69
043578	B15-27, B15-32, B15-41, B15-48, B15-113, B15-119
043579	B15-27, B15-32, B15-41, B15-48, B15-95, B15-113, B15-119

PART NUMBER INDEX

Part Number	Page
043580	B15-31, B15-44, B15-71
043581	B15-84, B15-93
043582	B15-84, B15-93
043583	B15-84, B15-93
043584	B15-84, B15-93
043585	B15-31, B15-44, B15-71
043586	B15-31, B15-44, B15-71
043618	B15-29, B15-33, B15-44, B15-71
043619	B15-29, B15-33, B15-44, B15-71, B16-57, B16-59, B16-61, B16-63
043620	B15-29, B15-33, B15-44, B15-54, B15-71
043621	B15-29, B15-33, B15-44, B15-71
043622	B15-29, B15-33, B15-44, B15-71
043623	B15-29, B15-33, B15-44, B15-71
043624	B15-29, B15-33, B15-44, B15-54, B15-71
043625	B15-29, B15-33, B15-44, B15-71
043626	B15-29, B15-33, B15-44, B15-71
043627	B15-29, B15-33, B15-44, B15-71
043628	B15-31, B15-44, B15-71
043629	B15-31, B15-44, B15-71
043630	B15-31, B15-44, B15-71
043631	B15-31, B15-44, B15-71
043632	B15-31, B15-44, B15-71
043633	B15-31, B15-44, B15-71
043634	B15-29, B15-33, B15-44, B15-71
043635	B15-85, B15-93
043636	B15-85, B15-93
043637	B15-85, B15-93
043638	B15-85, B15-93
043639	B15-85, B15-93
043640	B15-85, B15-93
043958	B15-77
043959	B15-77
043960	B15-77
043961	B15-77
043962	B15-77
043963	B15-77
043964	B15-77
043965	B15-77
043966	B15-77
043967	B15-77
043968	B15-77
043969	B15-77
043970	B15-77
043971	B15-77
043972	B15-77
043974	B15-77
043976	B15-77
043977	B15-77
043978	B15-77
043995	B15-26, B15-35, B15-48, B15-50, B15-52
043996	B15-26, B15-35, B15-48, B15-50, B15-52
043997	B15-26, B15-35, B15-48, B15-50, B15-52
043998	B15-26, B15-48, B15-50, B15-52, B15-77
044000	B15-26, B15-35, B15-48, B15-50, B15-52, B15-77
044003	B15-26, B15-35, B15-48, B15-50, B15-52, B15-77
044007	B15-26, B15-35, B15-48, B15-50, B15-52, B15-77
044010	B15-26, B15-35, B15-48, B15-50, B15-51, B15-52, B15-77
044013	B15-26, B15-35, B15-48, B15-49, B15-50, B15-51, B15-52
044015	B15-26
044020	B15-28, B15-35, B15-49, B15-51, B15-52, B15-77
044023	B15-28, B15-35, B15-49, B15-51, B15-52, B15-77
044025	B15-28, B15-35, B15-49, B15-51, B15-52, B15-77
044031	B15-28, B15-35, B15-49, B15-51, B15-77
044034	B15-28, B15-35, B15-49, B15-51, B15-77
044040	B15-28, B15-35, B15-77
044043	B15-28, B15-35, B15-77
044046	B15-28, B15-35
044049	B15-28, B15-35
044054	B15-28, B15-35
044055	B15-28, B15-30, B15-35
044114	B15-26, B15-35, B15-49, B15-51, B15-52, B15-77
044115	B15-26
044164	B15-85
044165	B15-85
044166	B15-85
044198	B15-26, B15-35, B15-48, B15-50, B15-52, B15-77
044199	B15-26, B15-35, B15-49, B15-51, B15-52, B15-77
044200	B15-30, B15-35
044201	B15-30, B15-35
044202	B15-28, B15-35, B15-49, B15-51, B15-77
044203	B15-28, B15-35
044231	B15-61
044232	B15-61
044233	B15-61
044234	B15-61
044235	B15-61
044236	B15-61
044360	B15-29, B15-33, B15-41, B15-69
044440	B15-84, B15-91
045338	B2-42
045412	B2-42
045431	B15-84, B15-93
045434	B15-85, B15-93
045464	B15-84, B15-93
045600	B2-42
045601	B2-42
045602	B2-42
045603	B2-42
045604	B2-42
045605	B2-42
045606	B2-42
045677	B2-42
045778	B15-84, B15-91
045781	B15-84, B15-91
045784	B15-84, B15-91
045787	B15-84, B15-91
045790	B15-84, B15-91
045793	B15-85, B15-91
045796	B15-85, B15-91
045799	B15-85, B15-91
045802	B15-85, B15-91
045805	B15-85, B15-91
045808	B15-85, B15-91
045874	B4-90, B4-94
045927	B15-103, B15-106, B15-113, B15-119
045928	B15-103, B15-106, B15-113, B15-119
045931	B15-103, B15-106, B15-113, B15-119
045934	B15-103, B15-106
045936	B15-103, B15-106
045939	B15-103, B15-106, B15-115, B15-119
045943	B15-103, B15-106, B15-115, B15-119
045949	B15-103, B15-106, B15-115, B15-119
045951	B15-103, B15-106, B15-115, B15-119
045953	B15-103, B15-106, B15-115, B15-119
045955	B15-103, B15-106
045956	B15-103, B15-106
046110	B15-77
046166	B15-113, B15-119
046167	B15-113, B15-119

PART NUMBER INDEX

DODGE®

Part Number	Page
046168	B15-113, B15-119
046175	B15-113, B15-119
046176	B15-113, B15-119
046177	B15-113, B15-119
046219	B16-38, B16-39
046221	B16-38, B16-39
046222	B16-38, B16-39
046223	B16-38, B16-39
046224	B16-38, B16-39, B16-65
046225	B16-38, B16-39, B16-65
046226	B16-38, B16-39, B16-65
046227	B16-38, B16-39, B16-65
046228	B16-38, B16-65
046229	B16-38, B16-65
046230	B16-38, B16-65
046231	B16-38, B16-65
046232	B16-38, B16-65
046233	B16-49, B16-53, B16-65
046234	B16-49, B16-53, B16-65
046235	B16-49, B16-53, B16-65
046236	B16-49, B16-53, B16-65
046237	B16-49, B16-53, B16-65
046238	B16-41
046239	B16-41
046285	B16-35, B16-41
046286	B16-35, B16-41
046287	B16-35, B16-41
046288	B16-35, B16-41
046289	B16-35, B16-41
046290	B16-35, B16-41
046291	B16-35, B16-41
046292	B16-35, B16-57, B16-59, B16-61, B16-63
046293	B16-35, B16-41, B16-57, B16-59, B16-61, B16-63
046294	B16-35, B16-57, B16-59, B16-61, B16-63
046295	B16-35, B16-57, B16-59, B16-61, B16-63
046296	B16-35, B16-57, B16-59, B16-61, B16-63
046297	B16-35, B16-57, B16-59, B16-61, B16-63
046298	B16-35, B16-57, B16-59, B16-61, B16-63
046299	B16-35, B16-57, B16-59, B16-61, B16-63
046300	B16-57, B16-59, B16-61, B16-63
046301	B16-57, B16-59, B16-61, B16-63
046302	B16-57, B16-59, B16-61, B16-63
046304	B16-35, B16-41
046305	B16-35, B16-41
046306	B16-35, B16-41
046307	B16-35, B16-41
046308	B16-35, B16-41
046309	B16-35, B16-41
046310	B16-35, B16-41, B16-57, B16-59, B16-61, B16-63
046311	B16-35, B16-57, B16-59, B16-61, B16-63
046312	B16-35, B16-41, B16-57, B16-59, B16-61, B16-63
046313	B16-35, B16-57, B16-59, B16-61, B16-63
046314	B16-35, B16-57, B16-59, B16-61, B16-63
046315	B16-35, B16-57, B16-59, B16-61, B16-63
046316	B16-35, B16-57, B16-59, B16-61, B16-63
046317	B16-35, B16-57, B16-59, B16-61, B16-63
046318	B16-35, B16-57, B16-59, B16-61, B16-63
046323	B15-67
046324	B15-67
046325	B15-67
046326	B15-67
046331	B16-38, B16-39
046332	B16-38, B16-39
046333	B16-38, B16-39
046350	B15-27, B15-32, B15-44, B15-48, B15-50, B15-52
046351	B15-27, B15-32, B15-44, B15-48, B15-50, B15-52
046352	B15-27, B15-32, B15-44, B15-48, B15-50, B15-52, B15-71
046353	B15-27, B15-32, B15-44, B15-48, B15-50, B15-52, B15-71
046354	B15-27, B15-32, B15-44, B15-48, B15-50, B15-52, B15-54, B15-71
046355	B15-27, B15-32, B15-44, B15-48, B15-50, B15-71
046356	B15-27, B15-32, B15-44, B15-48, B15-50, B15-52, B15-71
046357	B15-27, B15-32, B15-44, B15-48, B15-50, B15-71
046358	B15-27, B15-32, B15-44, B15-48, B15-50, B15-52, B15-54, B15-71
046359	B15-27, B15-32, B15-44, B15-49, B15-51, B15-71
046360	B15-27, B15-32, B15-44, B15-49, B15-51, B15-52, B15-71
046361	B15-29, B15-32, B15-44, B15-49, B15-51, B15-52, B15-54, B15-71
046362	B15-29, B15-33, B15-44, B15-49, B15-51, B15-71
046363	B15-29, B15-33, B15-44, B15-49, B15-51, B15-52, B15-54, B15-71
046364	B15-29, B15-33, B15-44, B15-49, B15-51, B15-71
046400	B15-103, B15-106, B15-113, B15-119
046401	B15-103, B15-106, B15-113, B15-119
046402	B15-103, B15-106, B15-113, B15-119
046403	B15-103, B15-106, B15-113, B15-119
046404	B15-103, B15-106, B15-113, B15-119
046405	B15-103, B15-106
046406	B15-103, B15-106
046407	B15-103, B15-106, B15-115, B15-119
046408	B15-103, B15-106, B15-115, B15-119
046409	B15-103, B15-106, B15-115, B15-119
046410	B15-103, B15-106, B15-115, B15-119
046411	B15-103, B15-106, B15-115, B15-119
046412	B15-103, B15-106, B15-115, B15-119
046413	B15-103, B15-106, B15-115, B15-119
046414	B15-103, B15-106, B15-115, B15-119
046415	B15-103, B15-106, B15-115, B15-119
046416	B15-103, B15-106, B15-115, B15-119
046417	B15-103, B15-106
046418	B15-103, B15-106
046419	B15-103, B15-106, B15-115, B15-119

PART NUMBER INDEX

Part Number	Page
046420	B15-103, B15-106, B15-115, B15-119
046421	B15-29, B15-33, B15-41, B15-69
046422	B15-103, B15-106
046423	B15-103, B15-106
046424	B15-103, B15-106
046425	B15-103, B15-106
046430	B15-29, B15-33, B15-44, B15-49, B15-51, B15-71
046431	B15-29, B15-33, B15-44, B15-49, B15-51, B15-54,B15-71
046432	B15-29, B15-33, B15-44, B15-49, B15-51, B15-71
046433	B15-29, B15-33, B15-44, B15-49, B15-51, B15-54, B15-71
046434	B15-29, B15-33, B15-44, B15-49, B15-51, B15-71
046463	B15-113, B15-119
046464	B15-113, B15-119
046465	B15-113, B15-119
046466	B15-113, B15-119
046467	B15-113, B15-119
046468	B15-113, B15-119
046469	B15-113, B15-119
046470	B15-113, B15-119
046471	B15-113, B15-119
046472	B15-113, B15-119
046473	B15-113, B15-119
046474	B15-113, B15-119
046475	B15-113, B15-119
046476	B15-113, B15-119
046477	B15-113, B15-119
046478	B15-113, B15-119
046487	B16-35, B16-41
046488	B16-35, B16-41, B16-57, B16-59, B16-61, B16-63
046489	B16-35, B16-41
046490	B16-35, B16-57, B16-59, B16-61, B16-63
046492	B16-41
046496	B16-41
046498	B15-85, B15-91
046499	B15-85, B15-91
046545	B15-29, B15-33, B15-44, B15-71
046550	B15-99
046551	B15-95, B15-99
046552	B15-95, B15-99
046553	B15-95, B15-99
046554	B15-95, B15-99
046555	B15-95, B15-99
046556	B15-99
046557	B15-91, B15-95, B15-99
046558	B15-95, B15-99
046559	B15-95, B15-99
046560	B15-95, B15-99
046561	B15-95, B15-99
046562	B15-95, B15-99
046563	B15-95, B15-99
046564	B15-95, B15-99
046565	B15-95, B15-99
046566	B15-85, B15-91
046567	B15-85, B15-91
046568	B15-85, B15-91
046569	B15-85, B15-91
046570	B15-85, B15-91
046572	B15-85, B15-91
046632	B15-45, B15-125
046634	B15-45, B15-125
046635	B15-45, B15-125
046637	B15-45, B15-125
046638	B15-45, B15-125
046639	B15-45, B15-125
046642	B15-45, B15-125
046643	B15-45, B15-125
046680	B15-95, B15-99
046682	B15-95, B15-99
046710	B16-43
046711	B16-43
046712	B16-43
046713	B16-43
046714	B16-43
046715	B16-43
046717	B16-43
046718	B16-43
046719	B16-39, B16-43
046720	B16-39, B16-43
046721	B16-39
046722	B16-39
046723	B16-39
046751	B15-123
046752	B15-123
046753	B15-123
046754	B15-123
046755	B15-123
046756	B15-109, B15-123
046757	B15-109, B15-123
046758	B15-109, B15-123
046759	B15-109
046760	B15-109, B15-123
046761	B15-109, B15-123
046762	B15-109, B15-123
046763	B15-109, B15-123
046764	B15-109, B15-123
046765	B15-109, B15-123
046766	B15-109, B15-123
046767	B15-109, B15-123
046768	B15-109
046769	B15-109, B15-123
046770	B15-109
046771	B15-109
046772	B15-123
046773	B15-123
046850	B15-47
046851	B15-47
046855	B16-57, B16-59, B16-61, B16-63
046856	B16-57, B16-59, B16-61, B16-63
046872	B15-47
046873	B15-47
046874	B15-47
046875	B15-47
046876	B15-47
046877	B15-47
046878	B15-47
046879	B15-47
046880	B15-47
046881	B15-47
046882	B15-47
046883	B15-47
046884	B15-47
046885	B15-47
046886	B15-47
046887	B15-47
046891	B15-47
046892	B15-47
046893	B15-47
046894	B15-47
046960	B15-47
046961	B15-47
046962	B15-47
046963	B15-47
046964	B15-47
046965	B15-47
046966	B15-47
046967	B15-47
046968	B15-47
046969	B15-47
046970	B15-47
046971	B15-47
046972	B15-47
046973	B15-47
046974	B15-47
046975	B15-47
046976	B15-47
046977	B15-47
046978	B15-47
046979	B15-47
046980	B15-47
046981	B15-47
046982	B15-47
046983	B15-47
046984	B15-47
046985	B15-47
046986	B15-47
046987	B15-47
046988	B15-47
046989	B15-47
046991	B15-47
046992	B15-47
046993	B15-47
047628	B15-84, B15-93
047629	B15-84, B15-93
047630	B15-84, B15-93
047631	B15-84, B15-93
047632	B15-85, B15-93
047635	B15-85, B15-93
047636	B15-85, B15-93
047637	B15-84, B15-93
047638	B15-84, B15-93
047639	B15-84, B15-93
047641	B15-85, B15-93
047642	B15-85, B15-93
047643	B15-85, B15-93
047644	B15-85, B15-93
047645	B15-85, B15-93
047646	B15-84, B15-93
047647	B15-84, B15-93
047648	B15-84, B15-93
047649	B15-84, B15-93
047678	B15-84, B15-93
047679	B15-84, B15-93

PART NUMBER INDEX

DODGE®

Part Number	Page	Part Number	Page	Part Number	Page	Part Number	Page
047680	B15-84, B15-93	048009	B13-13	048060	B13-15	048934	B14-105, B16-23
047681	B15-85, B15-93	048010	B13-13	048061	B13-15	048937	B16-23
047682	B15-85, B15-93	048011	B13-13	048062	B13-15	048938	B16-23
047815	B15-47	048012	B13-13	048063	B13-15	048939	B16-23
047816	B15-47	048013	B13-13	048064	B13-15	048940	B16-23
047817	B15-47	048014	B13-13	048065	B13-15	049235	B10-67
047818	B15-47	048015	B13-13	048066	B13-15	049380	B2-56
047819	B15-47	048016	B13-13	048067	B13-15	049385	B7-34
047820	B15-47	048017	B13-13	048109	B13-19	049415	B6-50
047821	B15-47	048018	B13-13	048110	B13-19	049430	B6-53
047822	B15-47	048019	B13-13	048111	B13-19	049437	B4-36
047823	B15-47	048020	B13-13	048113	B13-19	049447	B6-31
047824	B15-47	048021	B13-13	048114	B13-19	049462	B4-99
047825	B15-47	048022	B13-13	048115	B13-19	049466	B6-31
047826	B15-47	048023	B13-13	048116	B13-19	049467	B6-42
047827	B15-47	048024	B13-13	048124	B13-19	049468	B8-14
047828	B15-47	048025	B13-13	048125	B13-19	049469	B2-28
047829	B15-47	048026	B13-13	048126	B13-19	049470	B7-30
047830	B15-47	048027	B13-13	048128	B13-19	049477	B2-36
047831	B15-47	048028	B13-13	048129	B13-19	049490	B16-41
047940	B15-31, B15-34, B15-41, B15-69, B15-84, B15-91	048029	B13-13	048130	B13-19	049496	B6-46
		048030	B13-13	048131	B13-19	049610	B6-38
		048031	B13-13	048202	B13-20	049615	B4-50
047941	B15-31, B15-34, B15-41, B15-69, B15-84, B15-91	048032	B13-13	048203	B13-20	049686	B2-31
		048033	B13-13	048204	B13-20	049690	B4-16
		048034	B13-15	048205	B13-20	049696	B6-48
047942	B15-84, B15-91	048035	B13-15	048206	B13-20	049709	B6-32
047943	B15-84, B15-91	048036	B13-15	048207	B13-20	049742	B4-38
047944	B15-84, B15-91	048037	B13-15	048208	B13-20	049747	B6-46
047945	B15-84, B15-91	048038	B13-15	048210	B13-20	049751	B9-18
047946	B15-84, B15-91	048039	B13-15	048216	B13-20	049781	B6-52
047947	B15-85, B15-91	048040	B13-15	048217	B13-20	049782	B8-8
047948	B15-85, B15-91	048041	B13-15	048218	B13-20	049784	B8-10
047949	B15-85, B15-91	048042	B13-15	048219	B13-20	049787	B7-22
047950	B15-85, B15-91	048043	B13-15	048220	B13-20	049802	B7-22
047951	B15-85, B15-91	048044	B13-15	048221	B13-20	049803	B7-22
047952	B15-85, B15-91	048045	B13-15	048222	B13-20	049811	B4-101
047953	B15-85, B15-91	048046	B13-15	048224	B13-20	049813	B6-51
047954	B15-85, B15-91	048047	B13-15	048385	B14-103	049816	B4-28
047955	B15-85, B15-91	048048	B13-15	048386	B14-103	049818	B4-28
047956	B15-85, B15-91	048049	B13-15	048389	B14-103	049829	B4-74
047957	B15-85, B15-91	048050	B13-15	048390	B14-103	049835	B2-56
048000	B13-13	048051	B13-15	048925	B14-105, B16-23	049838	B6-38
048001	B13-13	048052	B13-15	048926	B14-105	049841	B7-14
048002	B13-13	048053	B13-15	048927	B14-105, B16-23	049843	B7-14
048003	B13-13	048054	B13-15	048928	B14-105	049844	B7-14
048004	B13-13	048055	B13-15	048929	B14-105, B16-23	049845	B7-34
048005	B13-13	048056	B13-15	048930	B14-105, B16-23	049848	B7-14
048006	B13-13	048057	B13-15	048931	B14-105, B16-23	049852	B4-12
048007	B13-13	048058	B13-15	048932	B14-105, B16-23	049855	B6-51
048008	B13-13	048059	B13-15	048933	B14-105, B16-23	049859	B4-32

PART NUMBER INDEX

DODGE®

Part Number	Page
049879	B7-24
049884	B7-30
049887	B8-8
049891	B4-101
049892	B8-14
049893	B4-101
049894	B4-100
049918	B4-94
049925	B4-92
049926	B4-40
049930	B6-32
049944	B4-30
049945	B4-94
049950	B7-30
049991	B4-100
049996	B2-26
050119	B4-34
050130	B4-58
050132	B4-62
050146	B4-44
050189	B4-99
050386	B4-32
050420	B9-22
050474	B15-85, B15-91
050498	B4-44
050524	B2-42
050531	B15-85, B15-93
050555	B4-101
050580	B2-42
050653	B2-42
050654	B2-42
050656	B2-42
050662	B4-59, B4-62
050778	B8-14
050792	B4-16
050828	B8-12
050829	B8-12
050830	B8-12
050831	B8-12
050833	B8-12
050834	B4-54
050835	B4-54
050836	B8-16
050837	B4-12
050838	B8-10
050839	B7-24
050840	B8-14
050842	B8-14
050843	B4-56
050844	B8-16
050845	B8-8
050846	B4-74
050848	B8-12
050867	B4-56
050895	B4-52
050951	B7-24
051513	B4-99
051606	B7-34
051699	B8-14
051774	B4-50
051825	B4-100
051826	B4-99
051827	B4-99
051841	B15-52, B16-39
051878	B4-20
051879	B4-20
051880	B4-20
051885	B7-22
051888	B8-14
051889	B8-10
051890	B8-10
051891	B8-16
051892	B8-16
051906	B4-99
051931	B4-58
051987	B4-54
051991	B4-56
051992	B4-56
052002	B4-60
052003	B4-60
052004	B4-56, B4-60
052005	B4-26
052006	B4-56
052007	B4-56
052008	B4-56
052009	B4-54
052010	B4-54
052011	B4-36
052012	B4-12
052015	B4-99
052016	B4-50
052017	B4-60
052032	B4-88
052045	B7-34
052047	B4-100
052048	B4-100
052081	B15-85, B15-92
052093	B2-43, B6-54
052094	B4-50
052101	B4-12
052194	B4-70
052199	B4-70
052205	B4-60
052220	B4-34
052224	B4-24
052275	B4-26
052276	B4-100
052291	B4-56
052294	B4-99
052302	B4-60
052311	B4-99
052413	B4-18
052414	B4-18
052472	B4-32
052478	B4-100
052531	B4-99
052532	B4-100
052535	B6-31
052540	B4-99
052546	B6-46
052550	B4-100
052567	B7-30
052570	B15-52, B16-39
052604	B4-99
052618	B4-99
052620	B2-42
052621	B2-42
052622	B2-42
052623	B2-42
052626	B6-42
052637	B15-52, B16-39
052638	B15-52, B16-39
052639	B15-52, B16-39
052640	B15-52, B16-39
052641	B15-52, B16-39
052642	B15-52, B16-39
052643	B15-52, B16-39
052644	B15-52, B16-39
052645	B4-88
052668	B6-31
052722	B6-46
052729	B7-24
052762	B7-14
052763	B7-14
052792	B4-14
052794	B4-14
052906	B4-50
052931	B6-26
052932	B9-14
052939	B4-72
052959	B7-30
052981	B2-42
052984	B6-26
053007	B9-18
053008	B9-6
053011	B6-22
053021	B4-24
053025	B4-24
053042	B9-6
053045	B6-53
053047	B9-6
053067	B10-67
053088	B16-45
053140	B6-31
053169	B4-99
053170	B4-12, B4-20
053175	B4-36
053183	B4-24
053201	B16-39
053219	B7-22
053320	B4-84
053326	B7-24
053339	B7-22
053411	B7-22
053412	B7-22
053413	B7-22
053414	B7-22
053415	B7-22
053416	B7-22
053417	B7-22
053418	B7-22
053493	B6-42
053517	B6-46
053563	B4-100
053565	B4-90
053617	B7-24
053628	B10-67
053662	B8-10
053670	B4-99
053717	B4-16
053718	B4-16
053719	B4-28
053763	B9-22
053776	B4-88, B4-94
053784	B6-40
053871	B4-101
053883	B4-36
053894	B4-101
053895	B4-101
053901	B4-62
053955	B4-100
053986	B2-43, B6-54
054009	B4-18
054019	B4-90

PART NUMBER INDEX

DODGE®

Part Number	Page
054063	B4-101
054065	B4-100
054142	B6-26
054145	B2-42
054190	B4-99
054196	B4-90
054203	B4-99, B4-100
054225	B4-90
054276	B4-99
054300	B4-99
054314	B4-99
054315	B4-100
054316	B4-100
054342	B4-99
054390	B6-48
054411	B6-48
054412	B4-100
054419	B4-99
054431	B4-90
054436	B4-32
054455	B6-16
054495	B8-8
054534	B4-99
054548	B4-32
054556	B4-100
054580	B4-101
054593	B4-100
054726	B4-58
054727	B4-22
054781	B4-32
054782	B4-99
054831	B4-101
054837	B4-101
054843	B4-99
054917	B4-100
054918	B4-100
054934	B4-100
054949	B4-88
054950	B7-12
054960	B10-67
055572	B15-54
055654	B15-54
055710	B15-54
055712	B15-54
055714	B15-54
055716	B15-54
055734	B15-54
055740	B15-54
055805	B10-67
055806	B10-67
055807	B10-67
055840	B10-67
055876	B15-54
055881	B15-54
055898	B15-54
055906	B15-54
055907	B15-54
055915	B10-67
055931	B10-67, B14-103, B15-54
055940	B14-103, B15-54
055943	B10-67
056100	B10-51
056102	B10-51
056104	B10-51
056106	B10-51
056108	B10-51
056110	B10-51
056112	B10-51
056114	B10-51
056130	B10-51
056132	B10-51
056134	B10-51
056136	B10-51
056138	B10-51
056140	B10-51
056142	B10-51
056144	B10-51
056440	B2-64
056449	B2-56
056468	B6-53
056481	B4-24
056483	B4-24
056492	B4-68
056497	B2-46
056512	B6-34
056525	B2-26
056526	B2-56
056548	B2-26
056552	B2-31
056553	B2-26
056565	B2-26
056577	B2-51
056578	B4-101
056580	B2-56
056588	B4-100
056593	B2-36
056605	B6-46
056606	B4-16
056610	B6-10
056611	B2-31
056612	B2-31
056630	B4-100
056633	B2-36
056638	B6-46, B6-48
056676	B6-16
056696	B6-28
056727	B8-14
056728	B15-131
056734	B2-31
056744	B4-12
056750	B4-18
056765	B4-50
056779	B6-44
056780	B6-32
056784	B7-24
056796	B2-26
056797	B2-26
056800	B2-26
056801	B2-31
056802	B2-31
056803	B2-31
056804	B2-31
056805	B2-31
056806	B2-36
056807	B2-36
056808	B2-36
056809	B2-36
056810	B2-36
056811	B4-28
056830	B9-10
056845	B4-40
056855	B4-14
056862	B7-24
056864	B4-99
056867	B6-28
056889	B6-31
056890	B6-32
056893	B2-56
056902	B4-38
056907	B4-60
056911	B4-101
056912	B4-94
056929	B4-40
056961	B6-26
056962	B6-26
056964	B2-31
056967	B6-26
056968	B6-34
056970	B6-34
056971	B2-31
057102	B2-42
057114	B4-100
057132	B4-100
057201	B4-88
057212	B4-100
057220	B4-84
057260	B15-103
057265	B4-101
057266	B6-48
057338	B4-99
057354	B4-88
057361	B4-84
057363	B4-100
057368	B4-100
057414	B4-24
057442	B2-48
057474	B4-99
057475	B6-40
057487	B4-100
057524	B2-56
057543	B6-42
057594	B2-56
057603	B4-20
057658	B6-42
057683	B4-101
057687	B2-56
057692	B7-22
057707	B4-39
057708	B4-100
057709	B4-62
057770	B6-46
057800	B4-100
057801	B4-100
057802	B4-90
057839	B4-101
057847	B4-99
057854	B8-14
057878	B4-84
057898	B2-46
057899	B2-64
057906	B4-101
057907	B2-64
057908	B2-59
057958	B15-54
057966	B15-54
058081	B6-44
058157	B4-90, B4-94
058183	B4-100
058194	B4-99
058233	B4-101
058262	B4-99
058263	B4-99
058275	B9-6

PART NUMBER INDEX

Part Number	Page
058294	B2-64
058311	B2-59
058336	B2-59
058345	B2-42
058347	B6-48
058380	B4-100
058395	B6-36
058400	B4-26
058404	B2-56
058470	B2-56
058514	B2-65
058515	B2-57
058516	B2-48
058529	B4-50
058530	B15-131
058544	B4-50
058545	B4-50
058593	B2-56
058594	B2-64
058595	B2-64
058596	B2-46
058597	B2-46
058619	B4-100
058624	B4-26
058625	B6-26
058630	B4-84
058632	B2-51
058633	B4-100
058647	B6-46
058648	B2-59
058652	B4-101
058665	B2-42
058699	B15-52
058702	B4-14
058705	B4-76
058736	B4-58
058738	B4-101
058778	B9-16
058779	B9-16
058792	B2-56
058852	B4-100
058897	B4-70
058898	B6-34
058902	B15-52
058903	B15-52
058904	B15-52
058905	B15-52
058906	B15-52
058907	B15-52
058908	B15-52
058909	B15-52
058910	B2-64
058915	B4-101
058931	B2-46
058940	B2-68
058941	B2-56
058944	B2-46
058965	B2-42
058975	B2-46
058989	B2-42
058994	B6-42
058996	B7-34
058997	B6-16, B6-18
059593	B6-46
059595	B9-16
059596	B9-16
059614	B4-100
059636	B4-101
059637	B4-30
059667	B7-12
059673	B4-99
059680	B6-26
059696	B4-100
059704	B6-46
059705	B6-34
059722	B2-46
059737	B4-99
059754	B6-53
059758	B6-48
059785	B4-16
059798	B2-26
059799	B2-26
059811	B8-14
059816	B4-50
059821	B4-99
059823	B2-56
059844	B4-101
059850	B6-26
059857	B6-26
059869	B2-43, B6-54
059870	B2-26
059880	B6-42
059882	B6-16
059954	B4-100
060578	B10-53
060579	B10-53
060745	B10-53
060746	B10-53
060747	B10-53
060748	B10-53
060749	B10-53
060750	B10-53
060751	B10-53
060752	B10-53
060753	B10-53
060754	B10-53
060755	B10-53
060756	B10-53
060905	B15-114
060906	B15-114
061082	B11-19
061083	B11-19
061084	B11-19
061085	B11-19
061086	B11-19
061087	B11-19
062040	B11-45
062070	B11-45
062143	B6-14
062152	B6-34
062157	B4-100
062162	B4-14
062176	B6-54
062178	B4-14, B4-26
062182	B4-100
062184	B6-46
062186	B4-26
062187	B6-12
062260	B4-46
062263	B6-36
062270	B14-58
062281	B6-42
062285	B6-48
062304	B4-28
062306	B6-46
062307	B7-22
062309	B4-100
062317	B2-59
062321	B4-28
062337	B9-28
062339	B9-28
062340	B2-36
062373	B6-40
062379	B6-26
062407	B6-34
062408	B6-34
062438	B6-26
062439	B9-18
062443	B6-52
062454	B9-22
062461	B14-58
062475	B6-34
062491	B6-34
062497	B9-19
062500	B7-20
062509	B8-16
062525	B6-31
062542	B2-36
062570	B4-94
062572	B4-99
062575	B6-32
062628	B2-64
062648	B4-40
062676	B4-100
062682	B5-14
062686	B4-40
062691	B4-76
062700	B14-58
062702	B6-48
062738	B6-42
062741	B5-16
062742	B5-16
062746	B4-42
062773	B6-46
062779	B4-100
062781	B6-32
062829	B4-99
062835	B2-36
062837	B2-46, B2-56
062842	B4-60
062861	B5-14
062862	B5-14
062874	B2-26
062875	B2-48
062877	B4-99
062879	B2-26
062880	B6-50, B6-51
062881	B6-46, B6-48
062893	B9-20
062897	B4-60
062899	B7-30
062901	B2-35
062913	B2-31
062945	B9-18
062958	B5-14
062975	B4-76
062978	B5-12
062993	B5-12
062994	B2-31
063359	B11-55
063360	B11-55
063361	B11-55
063362	B11-55
063363	B11-55

PART NUMBER INDEX

DODGE®

Part Number	Page	Part Number	Page	Part Number	Page	Part Number	Page
063364	B11-55	064089	B4-40	064750	B9-18	065300	B11-11
063365	B11-55	064096	B7-30	064756	B4-28	065302	B11-11
063366	B11-55	064136	B4-28	064762	B7-30	065303	B11-11
063368	B11-55	064147	B2-54	064775	B4-40	065304	B11-14
063369	B11-55	064149	B4-90, B4-94	064794	B5-18	065305	B11-14
063389	B11-55	064153	B16-16	064825	B6-12	065306	B11-14
063390	B11-55	064154	B16-16	064839	B2-46	065310	B11-11
063392	B11-55	064155	B16-16	064841	B5-14	065311	B11-9
063393	B11-55	064156	B16-16	064853	B4-59	065312	B11-9
063394	B11-55	064157	B16-16	064865	B4-90	065313	B11-9
063395	B11-55	064178	B7-30	064874	B5-18	065314	B11-9
063396	B11-55	064198	B4-44	064875	B5-18	065315	B11-9
063398	B11-55	064203	B4-56	064880	B4-99	065316	B11-9
063399	B11-55	064211	B5-26	064882	B7-12	065317	B11-9
063411	B11-55	064214	B4-56	064890	B6-46	065530	B9-22
063420	B11-57	064230	B7-12	064910	B7-22	065548	B4-26
063421	B11-57	064237	B4-101	064911	B4-58	065551	B6-58
063422	B11-57	064249	B4-26	064912	B4-58	065555	B7-30
063424	B11-57	064255	B2-31	064913	B4-59	065565	B4-40
063426	B11-57	064289	B7-26	064929	B7-28	065569	B6-48
063429	B11-57	064300	B6-46, B6-48	064943	B4-54	065576	B4-60
063450	B11-57	064306	B2-26	064993	B2-35	065593	B4-72, B4-73
063451	B11-57	064335	B4-58	064994	B2-24	065595	B4-36, B4-42
063452	B11-57	064341	B2-31	065238	B11-9	065597	B5-22
063454	B11-57	064361	B4-40	065244	B11-9	065598	B5-18
063456	B11-57	064430	B6-42	065258	B11-14	065600	B2-36
063459	B11-57	064450	B4-16	065260	B11-14	065605	B6-26
063694	B10-67	064463	B5-14	065262	B11-14	065607	B5-40
063765	B14-103	064472	B5-26, B5-30	065265	B11-14	065616	B7-12
063766	B14-103	064473	B6-28	065268	B11-14	065620	B5-14
063767	B14-103	064480	B4-40	065270	B11-14	065632	B6-26
063768	B14-103	064483	B9-12	065271	B11-14	065634	B7-34
063769	B14-103	064503	B2-54	065274	B11-14	065635	B7-24
063770	B14-103	064535	B6-58	065282	B11-14	065636	B9-8
063771	B14-103	064536	B7-22	065283	B11-14	065641	B14-56
063772	B14-103	064537	B4-28	065284	B11-14	065642	B4-70
063773	B14-103	064557	B4-100	065285	B11-14	065644	B4-66, B4-68
063774	B14-103	064572	B2-46	065286	B11-14	065653	B4-60
063775	B14-103	064584	B2-62	065287	B11-14	065655	B2-46
063776	B14-103	064586	B4-59, B4-62	065288	B11-14	065657	B14-56
064000	B2-31	064624	B6-32	065289	B11-9	065658	B6-26
064064	B2-46	064637	B4-24	065290	B11-9	065666	B7-30
064070	B16-16	064656	B4-34	065291	B11-9	065681	B4-70
064071	B16-16	064670	B5-44	065292	B11-9	065694	B2-30
064072	B16-16	064684	B5-22	065293	B11-9	065699	B4-52
064073	B16-16	064689	B4-18	065294	B11-9	065700	B4-100
064074	B16-16	064691	B8-8	065295	B11-9	065766	B4-34
064075	B16-16	064698	B6-46	065296	B11-9	065770	B6-28
064076	B16-16	064704	B4-76	065297	B11-9	065771	B6-28
064077	B16-16	064720	B2-51	065298	B11-11	065774	B4-22
064079	B5-28	064735	B6-31, B6-32	065299	B11-11	065776	B5-18

PART NUMBER INDEX

Part Number	Page
065777	B5-18
065780	B2-64
065784	B6-12, B6-20
065786	B2-56
065945	B2-36
065969	B5-22
065970	B16-63
065971	B16-63
065972	B16-63
065973	B16-63
065974	B16-63
065975	B16-63
065976	B16-63
065977	B16-63
065978	B16-63
065979	B16-63
065980	B16-63
065981	B16-63
065982	B16-63
065983	B16-63
065984	B16-63
065985	B16-63
065986	B16-63
066212	B11-30
066213	B11-30
066214	B6-16, B11-30
066215	B11-30
066216	B11-30
066217	B11-30
066218	B11-30
066220	B11-30
066222	B11-30
066223	B11-30
066224	B11-33
066225	B11-33
066226	B11-30
066228	B11-30
066230	B11-30
066231	B11-33
066232	B11-30
066234	B11-30
066235	B11-33
066236	B11-30
066237	B11-30
066238	B11-33
066240	B11-33
066242	B11-33
066243	B11-30
066244	B11-33
066245	B11-33
066246	B11-30
066247	B11-30
066248	B11-30
066249	B11-30
066250	B11-30
066252	B11-30
066253	B11-30
066254	B11-30
066256	B11-30
066257	B11-30
066258	B11-30
066260	B11-33
066261	B11-33
066262	B11-30
066263	B11-30
066266	B11-30
066268	B11-33
066269	B11-30
066270	B11-30
066271	B11-30
066272	B11-33
066273	B11-30
066274	B11-33
066276	B11-33
066278	B11-33
066279	B11-39
066280	B11-39
066281	B11-39
066282	B11-39
066283	B11-39
066284	B11-39
066285	B11-39
066286	B11-39
066287	B11-39
066288	B11-39
066289	B11-39
066290	B11-39
066291	B11-39
066292	B11-39
066293	B11-39
066294	B11-39
066295	B11-39
066296	B11-39
066297	B11-39
066298	B11-39
066299	B11-39
066300	B11-30
066301	B11-30
066302	B11-30
066303	B11-30
066304	B11-30
066305	B11-30
066306	B11-30
066307	B11-30
066308	B11-30
066309	B11-30
066310	B11-30
066311	B11-30
066312	B11-39
066314	B11-39
066315	B11-39
066316	B11-39
066317	B11-39
066318	B11-39
066319	B11-39
066320	B11-39
066321	B11-39
066322	B11-39
066324	B11-39
066325	B11-39
066326	B11-39
066360	B11-33
066363	B11-33
066365	B11-33
066366	B11-33
066367	B11-33
066370	B11-33
066371	B11-33
066372	B11-33
066373	B11-33
066374	B11-33
066375	B11-33
066377	B11-33
066378	B11-33
066379	B11-33
066381	B11-33
066382	B11-33
066384	B11-33
066385	B11-33
066386	B11-33
066388	B11-33
066389	B11-33
066400	B11-33
066403	B11-33
066405	B11-33
066406	B11-33
066407	B11-33
066409	B11-33
066411	B11-33
066412	B11-33
066413	B11-33
066414	B11-33
066415	B11-33
066417	B11-33
066418	B11-33
066419	B11-33
066421	B11-33
066422	B11-33
066424	B11-33
066425	B11-33
066426	B11-33
066428	B11-33
066429	B11-33
066444	B11-39
066445	B11-39
066446	B11-39
066447	B11-39
066448	B11-39
066450	B11-39
066451	B11-39
066455	B11-39
066456	B11-39
066457	B11-39
066458	B11-39
066459	B11-39
066460	B11-39
066461	B11-39
066463	B11-39
066464	B11-39
066465	B11-39
066466	B11-39
066467	B11-39
066468	B11-39
066469	B11-39
066471	B11-39
066472	B11-39
066473	B11-39
066475	B11-39
066476	B11-39
066478	B11-39
066479	B11-39
066480	B11-39
066482	B11-39
066483	B11-39
066484	B11-39
066485	B11-39
066486	B11-39
066487	B11-39
066488	B11-39
066489	B11-39
066499	B11-39
066500	B11-39
066501	B11-39
066502	B11-39

PART NUMBER INDEX

DODGE®

Part Number	Page
066503	B11-39
066504	B11-39
066506	B11-39
066507	B11-39
066509	B11-39
066510	B11-39
066511	B11-39
066512	B11-39
066513	B11-39
066514	B11-39
066515	B11-39
066516	B11-39
066517	B11-39
066519	B11-39
066520	B11-39
066521	B11-39
066522	B11-39
066523	B11-39
066524	B11-39
066526	B11-39
066527	B11-39
066528	B11-39
066530	B11-39
066531	B11-39
066533	B11-39
066534	B11-39
066535	B11-39
066537	B11-39
066538	B11-39
066539	B11-39
066540	B11-39
066541	B11-39
066542	B11-39
066543	B11-39
066544	B11-39
066559	B11-39
066560	B11-39
066561	B11-39
066562	B11-39
066563	B11-39
066564	B11-39
066566	B11-39
066567	B11-39
066569	B11-39
066570	B11-39
066571	B11-39
066572	B11-39
066573	B11-39
066574	B11-39
066575	B11-39
066576	B11-39
066577	B11-39
066578	B11-39
066580	B11-39
066581	B11-39
066582	B11-39
066583	B11-39
066584	B11-39
066585	B11-39
066587	B11-39
066588	B11-39
066589	B11-39
066590	B11-39
066591	B11-39
066593	B11-39
066594	B11-39
066596	B11-39
066598	B11-39
066600	B11-39
066601	B11-39
066602	B11-39
066603	B11-39
066604	B11-39
066605	B11-39
066606	B11-39
066607	B11-39
066629	B14-104, B16-24
066630	B14-104, B16-24
066631	B14-104, B16-24
066632	B14-104, B16-24
066633	B14-104, B16-24
066634	B14-104, B16-24
066635	B14-104, B16-24
066636	B14-104, B16-24
066637	B14-104, B16-24
066638	B14-104, B16-24
066642	B14-104, B16-24
066643	B14-104, B16-24
066644	B14-104
067007	B11-43
067016	B11-43
067019	B4-36
067031	B11-43
067034	B11-43
067042	B11-43
067043	B11-43
067044	B11-43
067045	B11-43
067046	B11-43
067047	B11-43
067048	B11-43
067049	B11-43
067050	B11-43
067051	B11-43
067052	B11-43
067053	B11-43
067054	B11-43
067055	B11-43
067056	B11-43
067057	B11-43
067060	B11-43
067061	B11-43
067072	B11-43
067073	B11-43
067075	B11-43
067078	B11-43
067100	B11-43
067103	B11-43
067120	B11-43
067123	B11-43
067135	B11-43
067138	B11-43
067149	B11-44
067151	B11-44
067152	B11-44
067153	B11-44
067154	B11-44
067155	B11-44
067156	B11-44
067157	B11-44
067159	B11-44
067164	B11-44
067234	B10-67
067323	B10-67
067326	B15-54
067340	B10-67
067342	B10-67
067343	B10-67
067344	B10-67
067345	B10-67
067346	B10-67
067347	B10-67
067348	B10-67
067350	B10-67
067352	B10-67
067353	B10-67
067354	B10-67
067355	B10-67
067356	B10-67
067357	B10-67
067501	B15-54
067503	B15-54
067509	B15-54
067511	B15-54
067517	B15-54
067519	B15-54
067520	B15-54
067521	B15-54
067576	B10-67, B14-103, B15-54
067601	B9-20
067630	B2-26
067642	B4-54
067652	B4-16
067663	B4-34
067664	B8-10
067666	B4-36
067669	B15-131
067674	B4-42
067678	B2-24
067679	B4-14
067710	B4-99
067713	B5-12
067726	B6-44
067742	B4-16
067774	B4-100
067777	B5-14
067783	B6-12
067829	B4-62
067830	B4-100
067839	B2-26
067865	B5-12
067868	B4-64
067874	B4-54
067892	B4-52
067902	B4-88
067903	B6-42
067910	B5-12
067912	B15-131
067919	B2-46
067921	B14-56
067922	B14-56
067925	B4-14
067926	B7-22
067958	B6-28
067959	B4-36
067969	B6-34
067970	B6-26
067986	B2-56
067996	B2-46
067997	B6-28
068008	B6-54
068013	B4-88
068025	B4-26

PART NUMBER INDEX

DODGE®

Part Number	Page
068053	B2-64
068061	B6-16
068066	B4-100
068068	B4-30
068071	B5-20, B7-20
068088	B4-99
068092	B7-30
068118	B7-22
068184	B4-72
068185	B4-99
068195	B7-16
068196	B7-16
068197	B7-16
068198	B7-16
068199	B7-16
068200	B7-16
068201	B7-16
068202	B7-18
068203	B7-18
068204	B7-18
068205	B7-18
068206	B7-18
068207	B7-28
068208	B7-28
068209	B7-28
068210	B7-28
068211	B7-28
068212	B7-28
068213	B7-24
068214	B7-24
068215	B7-24
068216	B7-24
068230	B5-18
068232	B6-48
068234	B2-28
068236	B2-26
068239	B4-101
068266	B4-100
068273	B5-40
068283	B2-31
068290	B4-99
068301	B4-58
068307	B4-22
068320	B6-34
068321	B6-42
068322	B2-46
068329	B5-22
068361	B4-20
068372	B4-12
068373	B6-16, B6-18
068374	B4-76
068387	B9-18
068389	B6-46
068400	B9-12
068404	B4-94
068424	B2-64
068428	B8-12
068471	B7-34
068472	B5-22
068478	B4-92
068495	B2-46
068532	B4-48
068537	B6-12
068540	B6-54
068561	B9-18
068571	B4-56
068572	B4-56
068573	B4-56
068576	B14-56
068603	B4-14
068608	B6-52
068622	B5-12
068643	B6-26
068650	B6-46
068659	B4-72
068662	B5-22
068663	B6-32
068673	B5-22
068680	B5-22
068682	B5-22
068683	B5-14
068685	B5-32
068686	B5-22
068687	B2-62
068715	B5-14
068716	B8-16
068720	B4-50
068726	B5-10
068727	B5-10
068743	B7-16
068747	B9-12
068756	B6-42
068758	B6-34
068760	B4-20
068763	B9-20
068774	B14-56
068775	B14-56
068777	B6-12
068784	B9-16
068785	B4-58
068789	B4-48
068790	B9-22
068800	B4-24
068803	B9-18
068809	B8-16
068839	B4-40
068840	B4-50
068849	B7-42
068855	B9-18
068861	B5-26
068862	B15-131
068864	B9-10
068865	B5-14, B5-22
068866	B7-24
068867	B9-16
068871	B5-22
068872	B5-18
068878	B5-32
068889	B4-94
068901	B7-26
068905	B14-56
068915	B4-40
068937	B4-40
068973	B4-59, B4-62
068996	B4-46
069034	B11-14
069039	B11-14
069045	B11-14
069046	B11-14
069060	B11-14
069061	B11-14
069062	B11-14
069063	B11-14
069064	B11-14
069065	B11-14
069066	B11-14
069067	B11-14
069069	B11-14
069286	B16-16
069287	B16-16
069288	B16-16
069289	B16-16
069296	B16-16
069297	B16-16
069303	B16-16
069304	B16-16
069305	B16-16
069306	B16-16
069307	B16-16
069308	B16-16
069312	B16-16
069313	B16-16
069316	B16-16
069317	B16-16
069340	B14-97
069341	B14-97
069342	B14-97
069343	B14-97
069344	B14-97
069345	B14-97
069346	B14-97
069347	B14-97
069348	B14-97
069349	B14-97
069350	B14-97
069351	B14-97
069352	B14-97
069353	B14-97
069354	B14-99
069355	B14-99
069356	B14-99
069357	B14-99
069358	B14-99
069359	B14-99
069360	B14-99
069361	B14-99
069362	B14-99
069363	B14-99
069364	B14-99
069365	B14-99
069366	B14-99
069367	B14-99
069368	B14-97
069369	B14-97
069370	B14-97
069371	B14-97
069372	B14-97
069373	B14-97
069374	B14-97
069375	B14-97
069376	B14-97
069377	B14-97
069378	B14-97
069379	B14-97
069380	B14-97
069381	B14-97
069382	B14-99
069383	B14-99
069384	B14-99
069385	B14-99
069386	B14-99
069387	B14-99
069388	B14-99
069389	B14-99

PART NUMBER INDEX

DODGE®

Part Number	Page	Part Number	Page	Part Number	Page	Part Number	Page
069390	B14-99	069445	B14-33	069496	B14-31	069555	B14-45
069391	B14-99	069446	B14-33	069497	B14-31	069556	B14-43
069392	B14-99	069447	B14-33	069498	B14-33	069557	B14-43
069393	B14-99	069448	B14-33	069499	B14-33	069558	B14-43
069394	B14-99	069449	B14-33	069500	B14-33	069559	B14-43
069395	B14-99	069450	B14-33	069501	B14-33	069560	B14-43
069400	B14-31	069451	B14-33	069502	B14-33	069561	B14-43
069401	B14-31	069452	B14-33	069503	B14-33	069562	B14-43
069402	B14-31	069453	B14-33	069504	B14-33	069563	B14-43
069403	B14-31	069454	B14-33	069505	B14-33	069564	B14-43
069404	B14-31	069455	B14-33	069506	B14-33	069565	B14-43
069405	B14-31	069456	B14-31	069507	B14-33	069566	B14-43
069406	B14-31	069457	B14-31	069508	B14-33	069567	B14-45
069407	B14-31	069458	B14-31	069509	B14-33	069568	B14-45
069408	B14-31	069459	B14-31	069510	B14-33	069569	B14-45
069409	B14-31	069460	B14-31	069511	B14-33	069570	B14-45
069410	B14-31	069461	B14-31	069520	B14-43	069571	B14-45
069411	B14-31	069462	B14-31	069521	B14-43	069572	B14-45
069412	B14-31	069463	B14-31	069522	B14-43	069573	B14-45
069413	B14-31	069464	B14-31	069523	B14-43	069574	B14-43
069414	B14-33	069465	B14-31	069524	B14-43	069575	B14-43
069415	B14-33	069466	B14-31	069525	B14-43	069576	B14-43
069416	B14-33	069467	B14-31	069526	B14-43	069577	B14-43
069417	B14-33	069468	B14-31	069527	B14-43	069578	B14-43
069418	B14-33	069469	B14-31	069528	B14-43	069579	B14-43
069419	B14-33	069470	B14-33	069529	B14-43	069580	B14-43
069420	B14-33	069471	B14-33	069530	B14-43	069581	B14-43
069421	B14-33	069472	B14-33	069531	B14-45	069582	B14-43
069422	B14-33	069473	B14-33	069532	B14-45	069583	B14-43
069423	B14-33	069474	B14-33	069533	B14-45	069584	B14-43
069424	B14-33	069475	B14-33	069534	B14-45	069585	B14-45
069425	B14-33	069476	B14-33	069535	B14-45	069586	B14-45
069426	B14-33	069477	B14-33	069536	B14-45	069587	B14-45
069427	B14-33	069478	B14-33	069537	B14-45	069588	B14-45
069428	B14-31	069479	B14-33	069538	B14-43	069589	B14-45
069429	B14-31	069480	B14-33	069539	B14-43	069590	B14-45
069430	B14-31	069481	B14-33	069540	B14-43	069591	B14-45
069431	B14-31	069482	B14-33	069541	B14-43	069593	B14-67
069432	B14-31	069483	B14-33	069542	B14-43	069594	B14-67
069433	B14-31	069484	B14-31	069543	B14-43	069595	B14-67
069434	B14-31	069485	B14-31	069544	B14-43	069596	B14-67
069435	B14-31	069486	B14-31	069545	B14-43	069597	B14-67
069436	B14-31	069487	B14-31	069546	B14-43	069598	B14-67
069437	B14-31	069488	B14-31	069547	B14-43	069599	B14-67
069438	B14-31	069489	B14-31	069548	B14-43	069600	B14-67
069439	B14-31	069490	B14-31	069549	B14-45	069601	B14-67
069440	B14-31	069491	B14-31	069550	B14-45	069602	B14-67
069441	B14-31	069492	B14-31	069551	B14-45	069603	B14-67
069442	B14-33	069493	B14-31	069552	B14-45	069604	B14-69
069443	B14-33	069494	B14-31	069553	B14-45	069605	B14-69
069444	B14-33	069495	B14-31	069554	B14-45	069606	B14-69

PART NUMBER INDEX

DODGE®

Part Number	Page	Part Number	Page	Part Number	Page	Part Number	Page
069607	B14-69	069675	B14-67	069726	B14-71	069777	B14-71
069608	B14-69	069676	B14-67	069727	B14-71	069778	B14-71
069609	B14-69	069677	B14-67	069728	B14-71	069779	B14-71
069610	B14-69	069678	B14-67	069729	B14-71	069780	B14-71
069611	B14-69	069679	B14-67	069730	B14-71	069781	B14-71
069612	B14-69	069680	B14-67	069731	B14-71	069782	B14-71
069630	B14-67	069681	B14-67	069732	B14-71	069783	B14-71
069631	B14-67	069682	B14-67	069733	B14-71	069784	B14-71
069632	B14-67	069683	B14-67	069734	B14-71	069785	B14-71
069633	B14-67	069684	B14-69	069735	B14-73	069786	B14-71
069634	B14-67	069685	B14-69	069736	B14-73	069787	B14-71
069635	B14-67	069686	B14-69	069737	B14-73	069788	B14-71
069636	B14-67	069687	B14-69	069738	B14-73	069789	B14-71
069637	B14-67	069688	B14-69	069739	B14-73	069790	B14-71
069638	B14-67	069689	B14-69	069740	B14-73	069791	B14-73
069639	B14-67	069690	B14-69	069741	B14-73	069792	B14-73
069640	B14-67	069691	B14-69	069742	B14-73	069793	B14-73
069641	B14-67	069692	B14-69	069743	B14-73	069794	B14-73
069642	B14-69	069693	B14-71	069744	B14-73	069795	B14-73
069643	B14-69	069694	B14-71	069745	B14-73	069796	B14-73
069644	B14-69	069695	B14-71	069746	B14-73	069797	B14-73
069645	B14-69	069696	B14-71	069747	B14-73	069798	B14-73
069646	B14-69	069697	B14-71	069748	B14-73	069799	B14-73
069647	B14-69	069698	B14-71	069749	B14-71	069800	B14-73
069648	B14-69	069699	B14-71	069750	B14-71	069801	B14-73
069649	B14-69	069700	B14-71	069751	B14-71	069802	B14-73
069650	B14-69	069701	B14-71	069752	B14-71	069803	B14-73
069651	B14-67	069702	B14-71	069753	B14-71	069804	B14-73
069652	B14-67	069703	B14-71	069754	B14-71	069805	B14-83
069653	B14-67	069704	B14-71	069755	B14-71	069806	B14-83
069654	B14-67	069705	B14-71	069756	B14-71	069807	B14-83
069655	B14-67	069706	B14-71	069757	B14-71	069808	B14-83, B14-87
069656	B14-67	069707	B14-73	069758	B14-71	069809	B14-83, B14-87
069657	B14-67	069708	B14-73	069759	B14-71	069810	B14-83
069658	B14-67	069709	B14-73	069760	B14-71	069811	B14-83, B14-87
069659	B14-67	069710	B14-73	069761	B14-71	069812	B14-83, B14-87
069660	B14-67	069711	B14-73	069762	B14-71	069813	B14-83
069661	B14-67	069712	B14-73	069763	B14-73	069814	B14-83, B14-87
069662	B14-67	069713	B14-73	069764	B14-73	069815	B14-83, B14-87
069663	B14-69	069714	B14-73	069765	B14-73	069816	B14-83, B14-87
069664	B14-69	069715	B14-73	069766	B14-73	069817	B14-83, B14-87
069665	B14-69	069716	B14-73	069767	B14-73	069818	B14-83
069666	B14-69	069717	B14-73	069768	B14-73	069819	B14-83
069667	B14-69	069718	B14-73	069769	B14-73	069820	B14-83, B14-87
069668	B14-69	069719	B14-73	069770	B14-73	069821	B14-83, B14-87
069669	B14-69	069720	B14-73	069771	B14-73	069822	B14-85, B14-89
069670	B14-69	069721	B14-71	069772	B14-73	069823	B14-85, B14-89
069671	B14-69	069722	B14-71	069773	B14-73	069824	B14-85, B14-89
069672	B14-67	069723	B14-71	069774	B14-73	069825	B14-85, B14-89
069673	B14-67	069724	B14-71	069775	B14-73	069826	B14-85, B14-89
069674	B14-67	069725	B14-71	069776	B14-73	069827	B14-85, B14-89

PART NUMBER INDEX

DODGE®

Part Number	Page	Part Number	Page	Part Number	Page	Part Number	Page
069828	B14-85, B14-89	069879	B14-83, B14-87	069930	B14-85	070022	B12-49
069829	B14-85, B14-89	069880	B14-83, B14-87	069931	B14-85	070023	B12-49
069830	B14-85	069881	B14-83, B14-87	069932	B14-85	070024	B12-49
069831	B14-85, B14-89	069882	B14-83	069960	B12-51, B14-107, B14-110, B16-23	070025	B12-49
069832	B14-85, B14-89	069883	B14-83			070026	B12-49
069833	B14-85	069884	B14-83, B14-87	069961	B12-51, B14-107, B14-110, B16-23	070027	B12-49
069834	B14-85	069885	B14-83, B14-87			070028	B12-49
069835	B14-85	069886	B14-85, B14-89	069962	B12-51, B14-107, B14-110, B16-23	070029	B12-49
069836	B14-85	069887	B14-85, B14-89			070030	B12-49
069837	B14-83	069888	B14-85, B14-89	069963	B12-51, B14-107, B14-110, B16-23	070031	B12-49
069838	B14-83	069889	B14-85, B14-89			070053	B16-18
069839	B14-83	069890	B14-85, B14-89	069964	B12-51, B14-107, B14-110, B16-23	070054	B14-52
069840	B14-83, B14-87	069891	B14-85, B14-89			070055	B14-52
069841	B14-83, B14-87	069892	B14-85, B14-89	069965	B12-51, B14-107, B14-110, B16-23	070056	B14-52
069842	B14-83	069893	B14-85, B14-89			070057	B14-52
069843	B14-83, B14-87	069894	B14-85	069966	B12-51, B14-107, B14-110, B16-23	070058	B14-54
069844	B14-83, B14-87	069895	B14-85, B14-89			070059	B14-54
069845	B14-83	069896	B14-85, B14-89	069967	B12-51, B14-107, B14-110, B16-23	070060	B14-54
069846	B14-83, B14-87	069897	B14-85			070061	B14-54
069847	B14-83, B14-87	069898	B14-85	069968	B12-51, B14-107, B14-110, B16-23	070062	B14-54
069848	B14-83, B14-87	069899	B14-85			070063	B14-54
069849	B14-83, B14-87	069900	B14-85	069969	B12-51, B14-107, B14-110, B16-23	070064	B14-52
069850	B14-83	069901	B14-83			070065	B14-52
069851	B14-83	069902	B14-83	069970	B12-51	070066	B14-52
069852	B14-83, B14-87	069903	B14-83	069971	B12-51	070067	B14-52
069853	B14-83, B14-87	069904	B14-83, B14-87	069972	B12-51	070068	B14-54
069854	B14-85, B14-89	069905	B14-83, B14-87	069973	B12-51	070069	B14-54
069855	B14-85, B14-89	069906	B14-83	069975	B12-51	070070	B14-54
069856	B14-85, B14-89	069907	B14-83, B14-87	069983	B16-23	070071	B14-54
069857	B14-85, B14-89	069908	B14-83, B14-87	070000	B12-49	070072	B14-54
069858	B14-85, B14-89	069909	B14-83	070001	B12-49	070073	B14-54
069859	B14-85, B14-89	069910	B14-83, B14-87	070002	B12-49	070074	B14-52
069860	B14-85, B14-89	069911	B14-83, B14-87	070003	B12-49	070075	B14-52
069861	B14-85, B14-89	069912	B14-83, B14-87	070004	B12-49	070076	B14-52
069862	B14-85	069913	B14-83, B14-87	070005	B12-49	070077	B14-52
069863	B14-85, B14-89	069914	B14-83	070006	B12-49	070078	B14-54
069864	B14-85, B14-89	069915	B14-83	070007	B12-49	070079	B14-54
069865	B14-85	069916	B14-83, B14-87	070008	B12-49	070080	B14-54
069866	B14-85	069917	B14-83, B14-87	070009	B12-49	070081	B14-54
069867	B14-85	069918	B14-85, B14-89	070010	B12-49	070082	B14-54
069868	B14-85	069919	B14-85, B14-89	070011	B12-49	070083	B14-54
069869	B14-83	069920	B14-85, B14-89	070012	B12-49	070084	B14-52
069870	B14-83	069921	B14-85, B14-89	070013	B12-49	070085	B14-52
069871	B14-83	069922	B14-85, B14-89	070014	B12-49	070086	B14-52
069872	B14-83, B14-87	069923	B14-85, B14-89	070015	B12-49	070087	B14-52
069873	B14-83, B14-87	069924	B14-85, B14-89	070016	B12-49	070088	B14-54
069874	B14-83	069925	B14-85, B14-89	070017	B12-49	070089	B14-54
069875	B14-83, B14-87	069926	B14-85	070018	B12-49	070090	B14-54
069876	B14-83, B14-87	069927	B14-85, B14-89	070019	B12-49	070091	B14-54
069877	B14-83	069928	B14-85, B14-89	070020	B12-49	070092	B14-54
069878	B14-83, B14-87	069929	B14-85	070021	B12-49	070093	B14-54

PART NUMBER INDEX

Part Number	Page
070094	B14-54
070095	B14-54
070096	B14-54
070097	B14-54
070160	B14-106
070161	B14-106
070162	B14-106
070163	B14-106
070164	B14-106
070165	B14-106
070166	B14-106
070167	B14-106
070168	B14-106
070169	B14-106
070170	B14-106
070171	B14-106
070172	B14-106
070173	B14-106
070174	B14-106
070175	B14-106
070176	B14-106
070177	B14-106
070178	B12-50, B14-106
070179	B14-106
070180	B14-106
070181	B14-106
070182	B14-106
070183	B14-106
070184	B14-106
070185	B14-106
070186	B12-50, B14-106
070187	B14-106
070188	B14-106
070189	B12-50, B14-106
070190	B14-106
070191	B12-50, B14-106
070192	B14-106
070193	B12-50, B14-106
070194	B14-106
070240	B12-50
070241	B12-50
070242	B12-50
070243	B12-50
070244	B12-50
070245	B12-50
070246	B12-50
070247	B12-50
070248	B12-50
070249	B12-50
070250	B12-50
070272	B12-15
070273	B12-15
070274	B12-15
070276	B12-15
070277	B12-15
070278	B12-15
070279	B12-15
070280	B12-15
070282	B12-15
070284	B12-15
070285	B12-15
070286	B12-15
070288	B12-15
070290	B12-15
070295	B12-15
070296	B12-15
070297	B12-15
070299	B12-15
070300	B12-15
070301	B12-15
070302	B12-15
070303	B12-15
070305	B12-15
070307	B12-15
070308	B12-15
070309	B12-15
070311	B12-15
070313	B12-15
070318	B12-15
070319	B12-15
070320	B12-15
070322	B12-15
070323	B12-15
070324	B12-15
070325	B12-15
070326	B12-15
070328	B12-15
070330	B12-15
070331	B12-15
070332	B12-15
070334	B12-15
070336	B12-15
070341	B12-15
070342	B12-15
070343	B12-15
070345	B12-15
070346	B12-15
070347	B12-15
070348	B12-15
070349	B12-15
070351	B12-15
070353	B12-15
070354	B12-15
070355	B12-15
070357	B12-15
070359	B12-15
070361	B12-23
070362	B12-23
070363	B12-23
070365	B12-23
070367	B12-23
070368	B12-23
070369	B12-23
070371	B12-23
070373	B12-23
070375	B12-23
070377	B12-23
070379	B12-23
070380	B12-23
070381	B12-23
070383	B12-23
070385	B12-23
070386	B12-23
070387	B12-23
070389	B12-23
070391	B12-23
070393	B12-23
070395	B12-23
070397	B12-23
070398	B12-23
070399	B12-23
070401	B12-23
070403	B12-23
070404	B12-23
070405	B12-23
070407	B12-23
070409	B12-23
070411	B12-23
070413	B12-23
070415	B12-23
070416	B12-23
070417	B12-23
070419	B12-23
070421	B12-23
070422	B12-23
070423	B12-23
070425	B12-23
070427	B12-23
070429	B12-23
070431	B12-23
070436	B12-31
070437	B12-31
070438	B12-31
070440	B12-31
070441	B12-31
070442	B12-31
070443	B12-31
070444	B12-31
070446	B12-31
070448	B12-31
070449	B12-31
070450	B12-31
070470	B12-31
070471	B12-31
070472	B12-31
070474	B12-31
070475	B12-31
070476	B12-31
070477	B12-31
070478	B12-31
070480	B12-31
070482	B12-31
070483	B12-31
070484	B12-31
070491	B12-31
070492	B12-31
070493	B12-31
070495	B12-31
070496	B12-31
070497	B12-31
070498	B12-31
070499	B12-31
070501	B12-31
070503	B12-31
070504	B12-31
070505	B12-31
070523	B12-31
070524	B12-31
070525	B12-31
070527	B12-31
070528	B12-31
070529	B12-31
070530	B12-31
070531	B12-31
070533	B12-31
070535	B12-31
070536	B12-31
070537	B12-31
070541	B12-33
070542	B12-33
070543	B12-33
070545	B12-33
070546	B12-33
070547	B12-33

PART NUMBER INDEX

DODGE®

Part Number	Page	Part Number	Page	Part Number	Page	Part Number	Page
070548	B12-33	070666	B12-39	070754	B12-43	070845	B12-47
070549	B12-33	070671	B12-39, B12-41	070756	B12-43	070853	B12-33
070551	B12-33	070672	B12-39, B12-41	070757	B12-43	070854	B12-33
070553	B12-33	070673	B12-39	070758	B12-43	070855	B12-33
070554	B12-33	070675	B12-39, B12-41	070759	B12-43	070857	B12-33
070555	B12-33	070676	B12-39	070760	B12-43	070858	B12-33
070557	B12-33	070677	B12-39, B12-41	070762	B12-45	070859	B12-33
070559	B12-33	070678	B12-39, B12-41	070764	B12-45	070860	B12-33
070564	B12-33	070679	B12-39, B12-41	070765	B12-45	070861	B12-33
070565	B12-33	070681	B12-39, B12-41	070766	B12-45	070863	B12-33
070566	B12-33	070683	B12-39, B12-41	070768	B12-45	070865	B12-33
070568	B12-33	070684	B12-39, B12-41	070770	B12-45	070866	B12-33
070569	B12-33	070685	B12-39, B12-41	070772	B12-45	070867	B12-33
070570	B12-33	070687	B12-39, B12-41	070774	B12-45	070869	B12-33
070571	B12-33	070689	B12-39, B12-41	070779	B12-43	070871	B12-33
070572	B12-33	070691	B12-39	070780	B12-43	070880	B14-100
070574	B12-33	070693	B12-39	070781	B12-43	070881	B14-100
070576	B12-33	070698	B12-39, B12-41	070783	B12-43	070882	B14-100
070577	B12-33	070699	B12-39, B12-41	070784	B12-43	070883	B14-100
070578	B12-33	070700	B12-39	070785	B12-43	070884	B14-100
070580	B12-33	070702	B12-39, B12-41	070786	B12-43	070885	B14-100
070582	B12-33	070703	B12-39	070787	B12-43	070886	B14-100
070600	B12-33	070704	B12-39, B12-41	070789	B12-45	070887	B14-100
070601	B12-33	070705	B12-39, B12-41	070791	B12-45	070888	B14-100
070602	B12-33	070706	B12-39, B12-41	070792	B12-45	070889	B14-100
070604	B12-33	070708	B12-39, B12-41	070793	B12-45	070890	B14-100
070605	B12-33	070710	B12-39, B12-41	070795	B12-45	070891	B14-100
070606	B12-33	070711	B12-39, B12-41	070797	B12-45	070892	B14-100
070607	B12-33	070712	B12-39, B12-41	070799	B12-45	070893	B14-100
070608	B12-33	070714	B12-39, B12-41	070801	B12-45	070894	B14-101
070610	B12-33	070716	B12-39, B12-41	070811	B12-47	070895	B14-101, B14-103
070612	B12-33	070718	B12-39	070812	B12-47	070896	B14-101
070613	B12-33	070720	B12-39	070813	B12-47	070897	B14-101
070614	B12-33	070725	B12-39, B12-41	070815	B12-47	070898	B14-101
070616	B12-33	070726	B12-39, B12-41	070817	B12-47	070899	B14-101, B14-103
070618	B12-33	070727	B12-39	070818	B12-47	070900	B14-101
070644	B12-39, B12-41	070729	B12-39, B12-41	070819	B12-47	070901	B14-101
070645	B12-39, B12-41	070730	B12-39	070821	B12-47	070902	B14-101
070646	B12-39	070731	B12-39, B12-41	070823	B12-47	070903	B14-101, B14-103
070648	B12-39, B12-41	070732	B12-39, B12-41	070825	B12-47	070904	B14-101
070649	B12-39	070733	B12-39, B12-41	070827	B12-47	070905	B14-101
070650	B12-39, B12-41	070735	B12-39, B12-41	070829	B12-47	070906	B14-101, B14-103
070651	B12-39, B12-41	070737	B12-39, B12-41	070830	B12-47	070907	B14-101
070652	B12-39, B12-41	070738	B12-39, B12-41	070831	B12-47	070908	B14-101
070654	B12-39, B12-41	070739	B12-39, B12-41	070833	B12-47	070909	B14-101
070656	B12-39, B12-41	070741	B12-39, B12-41	070835	B12-47	070910	B14-101
070657	B12-39, B12-41	070743	B12-39, B12-41	070836	B12-47	070911	B14-101
070658	B12-39, B12-41	070745	B12-39	070837	B12-47	070912	B14-100
070660	B12-39, B12-41	070747	B12-39	070839	B12-47	070913	B14-100
070662	B12-39, B12-41	070752	B12-43	070841	B12-47	070914	B14-100
070664	B12-39	070753	B12-43	070843	B12-47	070915	B14-100

PART NUMBER INDEX

DODGE®

Part Number	Page
070916	B14-100
070917	B14-100
070918	B14-100
070919	B14-100
070920	B14-100
070921	B14-100
070922	B14-100
070923	B14-100
070924	B14-100
070925	B14-100
070926	B14-101
070927	B14-101, B14-103
070928	B14-101
070929	B14-101
070930	B14-101
070931	B14-101, B14-103
070932	B14-101
070933	B14-101
070934	B14-101
070935	B14-101, B14-103
070936	B14-101
070937	B14-101
070938	B14-101, B14-103
070939	B14-101
070940	B14-101
070941	B14-101
070942	B14-101
070943	B14-101
070951	B14-52
070952	B14-52
070953	B14-52
070954	B14-52
070955	B14-52
070956	B14-52
070957	B14-52
070958	B14-52
070959	B14-52
070960	B14-52
070961	B14-52
070962	B14-52
070963	B14-52
070964	B14-52
070965	B14-52
070966	B14-52
071000	B14-63, B16-16
071001	B14-63, B16-16
071002	B14-63, B16-16
071003	B14-63, B16-16
071004	B14-63, B16-16
071005	B14-63, B16-16
071006	B14-63, B16-16
071007	B14-63, B16-16
071008	B14-63, B16-16
071009	B14-63, B16-16
071010	B14-63, B16-16
071011	B14-63, B16-16
071012	B14-63, B16-16
071013	B14-63, B16-16
071014	B14-63, B16-16
071015	B14-63, B16-16
071016	B14-63, B16-16
071017	B14-63, B16-16
071018	B14-63, B16-16
071019	B14-63, B16-16
071020	B14-63, B16-16
071021	B14-63, B16-16
071022	B14-63, B16-16
071023	B14-63, B16-16
071024	B14-63, B16-16
071025	B14-63, B16-16
071026	B14-63, B16-16
071027	B14-63, B16-16
071028	B14-63, B16-16
071029	B14-63, B16-16
071030	B14-63, B16-16
071031	B14-63, B16-16
071032	B14-63, B16-16
071033	B14-63, B16-16
071034	B14-63, B16-18
071035	B14-63, B16-18
071036	B14-63, B16-18
071037	B14-63, B16-18
071038	B14-63, B16-18
071039	B14-63, B16-18
071040	B14-63, B16-18
071041	B14-63, B16-18
071042	B14-63, B16-18
071043	B14-63, B16-18
071044	B14-63, B16-18
071045	B14-63, B16-18
071046	B14-63, B16-18
071047	B14-63, B16-18
071048	B14-63, B16-18
071049	B14-63, B16-18
071050	B14-63, B16-18
071051	B14-63, B16-18
071052	B14-63, B16-18
071053	B14-63
071054	B14-63, B16-18
071055	B14-63, B16-18
071056	B14-63, B16-18
071057	B14-63, B16-18
071058	B14-63, B16-18
071059	B14-63, B16-18
071060	B14-63, B16-18
071061	B14-63, B16-18
071062	B14-63, B16-18
071063	B14-63, B16-18
071064	B14-63, B16-18
071065	B14-63, B16-18
071066	B14-63, B16-18
071067	B14-63, B16-18
071102	B14-63, B16-16
071103	B14-63, B16-16
071104	B14-63, B16-18
071105	B14-63, B16-18
071106	B14-63, B16-16
071107	B14-63, B16-16
071108	B14-63, B16-18
071109	B14-63, B16-18
071114	B16-16
071115	B16-16
071120	B14-35
071121	B14-35
071122	B14-35
071123	B14-35
071124	B14-35
071125	B14-35
071126	B14-35
071127	B14-35
071128	B14-35
071129	B14-35
071130	B14-37
071131	B14-37
071132	B14-37
071133	B14-37
071134	B14-37
071135	B14-37
071136	B14-37
071137	B14-37
071138	B14-37
071139	B14-37
071140	B14-37
071141	B14-35
071142	B14-35
071143	B14-35
071144	B14-35
071145	B14-35
071146	B14-35
071147	B14-35
071148	B14-35
071149	B14-35
071150	B14-35
071151	B14-37
071152	B14-37
071153	B14-37
071154	B14-37
071155	B14-37
071156	B14-37
071157	B14-37
071158	B14-37
071159	B14-37
071160	B14-37
071161	B14-37
071162	B14-35
071163	B14-35
071164	B14-35
071165	B14-35
071166	B14-35
071167	B14-35
071168	B14-35
071169	B14-35
071170	B14-35
071171	B14-35
071172	B14-37
071173	B14-37
071174	B14-37
071175	B14-37
071176	B14-37
071177	B14-37
071178	B14-37
071179	B14-37
071180	B14-37
071181	B14-37
071182	B14-37
071183	B14-35
071184	B14-35
071185	B14-35
071186	B14-35
071187	B14-35
071188	B14-35
071189	B14-35
071190	B14-35
071191	B14-35
071192	B14-35
071193	B14-37
071194	B14-37
071195	B14-37
071196	B14-37
071197	B14-37
071198	B14-37
071199	B14-37
071200	B14-37
071201	B14-37

PART NUMBER INDEX

DODGE®

Part Number	Page	Part Number	Page	Part Number	Page	Part Number	Page
071202	B14-37	071253	B14-47	071304	B14-77	071355	B14-77
071203	B14-37	071254	B14-47	071305	B14-77	071356	B14-77
071204	B14-47	071255	B14-47	071306	B14-77	071357	B14-77
071205	B14-47	071256	B14-47	071307	B14-77	071358	B14-77
071206	B14-47	071257	B14-47	071308	B14-77	071359	B14-77
071207	B14-47	071258	B14-47	071309	B14-77	071360	B14-77
071208	B14-47	071259	B14-47	071310	B14-77	071361	B14-77
071209	B14-47	071260	B14-47	071311	B14-77	071362	B14-77
071210	B14-47	071261	B14-47	071312	B14-77	071364	B14-75
071211	B14-47	071262	B14-47	071313	B14-75	071365	B14-75
071212	B14-47	071263	B14-47	071314	B14-75	071366	B14-75
071213	B14-47	071264	B14-47	071315	B14-75	071367	B14-75
071214	B14-47	071265	B14-47	071316	B14-75	071368	B14-75
071215	B14-47	071266	B14-47	071317	B14-75	071369	B14-75
071216	B14-47	071267	B14-47	071318	B14-75	071370	B14-75
071217	B14-47	071268	B14-47	071319	B14-75	071371	B14-75
071218	B14-47	071269	B14-47	071320	B14-75	071372	B14-75
071219	B14-47	071270	B14-47	071321	B14-75	071373	B14-75
071220	B14-47	071271	B14-47	071322	B14-75	071374	B14-77
071221	B14-47	071272	B14-89	071323	B14-77	071375	B14-77
071222	B14-47	071273	B14-89	071324	B14-77	071376	B14-77
071223	B14-47	071274	B14-89	071325	B14-77	071377	B14-77
071224	B14-47	071275	B14-89	071326	B14-77	071378	B14-77
071225	B14-47	071276	B14-89	071327	B14-77	071379	B14-77
071226	B14-47	071277	B14-89	071328	B14-77	071380	B14-77
071227	B14-47	071278	B14-89	071329	B14-77	071381	B14-77
071228	B14-47	071279	B14-89	071330	B14-77	071382	B14-77
071229	B14-47	071280	B14-89	071331	B14-77	071383	B14-77
071230	B14-47	071281	B14-89	071332	B14-77	071384	B14-77
071231	B14-47	071282	B14-89	071333	B14-77	071385	B14-77
071232	B14-47	071283	B14-89	071334	B14-77	071386	B14-77
071233	B14-47	071284	B14-89	071335	B14-77	071387	B14-77
071234	B14-47	071285	B14-89	071336	B14-77	071388	B14-77
071235	B14-47	071286	B14-89	071337	B14-77	071389	B12-17
071236	B14-47	071287	B14-89	071338	B14-75	071390	B12-17
071237	B14-47	071288	B14-75	071339	B14-75	071391	B12-17
071238	B14-47	071289	B14-75	071340	B14-75	071392	B12-17
071239	B14-47	071290	B14-75	071341	B14-75	071393	B12-17
071240	B14-47	071291	B14-75	071342	B14-75	071394	B12-17
071241	B14-47	071292	B14-75	071343	B14-75	071395	B12-17
071242	B14-47	071293	B14-75	071344	B14-75	071396	B12-17
071243	B14-47	071294	B14-75	071345	B14-75	071397	B12-17
071244	B14-47	071295	B14-75	071346	B14-75	071398	B12-17
071245	B14-47	071296	B14-75	071347	B14-75	071399	B12-17
071246	B14-47	071297	B14-75	071348	B14-77	071400	B12-17
071247	B14-47	071298	B14-77	071349	B14-77	071401	B12-17
071248	B14-47	071299	B14-77	071350	B14-77	071402	B12-17
071249	B14-47	071300	B14-77	071351	B14-77	071403	B12-17
071250	B14-47	071301	B14-77	071352	B14-77	071404	B12-17
071251	B14-47	071302	B14-77	071353	B14-77	071405	B12-17
071252	B14-47	071303	B14-77	071354	B14-77	071406	B12-17

PART NUMBER INDEX

DODGE®

Part Number	Page	Part Number	Page	Part Number	Page	Part Number	Page
071407	B12-17	071458	B12-25	071513	B12-35	071627	B14-47
071408	B12-17	071459	B12-25	071514	B12-35	071628	B14-47
071409	B12-17	071460	B12-25	071515	B12-35	071629	B14-47
071410	B12-17	071461	B12-25	071516	B12-35	071630	B14-47
071411	B12-17	071462	B12-25	071517	B12-35	071631	B14-47
071412	B12-17	071463	B12-25	071518	B12-35	071632	B14-47
071413	B12-17	071464	B12-25	071519	B12-35	071633	B14-47
071414	B12-17	071469	B12-35	071520	B12-35	071634	B14-47
071415	B12-17	071470	B12-35	071521	B12-41	071635	B14-47
071416	B12-17	071471	B12-35	071522	B12-41	071636	B14-47
071417	B12-17	071472	B12-35	071523	B12-41	071637	B14-47
071418	B12-17	071473	B12-35	071524	B12-41	071638	B14-47
071419	B12-17	071474	B12-35	071525	B12-41	071639	B14-47
071420	B12-17	071475	B12-35	071526	B12-41	071640	B14-47
071421	B12-17	071476	B12-35	071527	B12-41	071641	B14-47
071422	B12-17	071477	B12-35	071528	B12-41	071650	B14-38
071423	B12-17	071478	B12-35	071576	B14-87	071651	B14-38
071424	B12-17	071479	B12-35	071577	B14-87	071652	B14-38
071425	B12-17	071480	B12-35	071578	B14-87	071653	B14-38
071426	B12-17	071481	B12-35	071579	B14-87	071654	B14-38
071427	B12-17	071482	B12-35	071580	B14-87	071655	B14-38
071428	B12-17	071483	B12-35	071581	B14-87	071656	B14-38
071429	B12-17	071484	B12-35	071582	B14-87	071657	B14-38
071430	B12-17	071485	B12-35	071583	B14-87	071658	B14-38
071431	B12-17	071486	B12-35	071584	B14-87	071659	B14-38
071432	B12-17	071487	B12-35	071585	B14-87	071660	B14-38
071433	B12-25	071488	B12-35	071586	B14-87	071661	B14-38
071434	B12-25	071489	B12-35	071587	B14-87	071662	B14-38
071435	B12-25	071490	B12-35	071590	B14-100	071663	B14-38
071436	B12-25	071491	B12-35	071591	B14-100	071664	B14-38
071437	B12-25	071492	B12-35	071592	B14-101	071665	B14-38
071438	B12-25	071493	B12-35	071593	B14-100	071666	B14-38
071439	B12-25	071494	B12-35	071594	B14-100	071667	B14-38
071440	B12-25	071495	B12-35	071595	B14-101	071668	B14-38
071441	B12-25	071496	B12-35	071610	B14-47	071669	B14-38
071442	B12-25	071497	B12-35	071611	B14-47	071670	B14-38
071443	B12-25	071498	B12-35	071612	B14-47	071671	B14-38
071444	B12-25	071499	B12-35	071613	B14-47	071672	B14-38
071445	B12-25	071500	B12-35	071614	B14-47	071673	B14-38
071446	B12-25	071501	B12-35	071615	B14-47	071674	B14-38
071447	B12-25	071502	B12-35	071616	B14-47	071675	B14-38
071448	B12-25	071503	B12-35	071617	B14-47	071676	B14-38
071449	B12-25	071504	B12-35	071618	B14-47	071677	B14-38
071450	B12-25	071505	B12-35	071619	B14-47	071678	B14-38
071451	B12-25	071506	B12-35	071620	B14-47	071679	B14-38
071452	B12-25	071507	B12-35	071621	B14-47	071680	B14-38
071453	B12-25	071508	B12-35	071622	B14-47	071681	B14-38
071454	B12-25	071509	B12-35	071623	B14-47	071682	B14-38
071455	B12-25	071510	B12-35	071624	B14-47	071683	B14-38
071456	B12-25	071511	B12-35	071625	B14-47	071684	B14-38
071457	B12-25	071512	B12-35	071626	B14-47	071685	B14-38

PART NUMBER INDEX

DODGE®

Part Number	Page	Part Number	Page	Part Number	Page	Part Number	Page
071686	B14-38	071737	B14-49	071866	B14-41	071917	B14-51
071687	B14-38	071738	B14-49	071867	B14-41	071918	B14-51
071688	B14-38	071739	B14-49	071868	B14-41	071919	B14-51
071689	B14-38	071740	B14-49	071869	B14-41	071920	B14-51
071690	B14-38	071741	B14-49	071870	B14-41	071921	B14-51
071691	B14-38	071790	B12-19	071871	B14-41	071922	B14-51
071692	B14-38	071791	B12-19	071872	B14-41	071923	B14-51
071693	B14-38	071792	B12-19	071873	B14-41	071924	B14-51
071694	B14-38	071793	B12-19	071874	B14-41	071925	B14-51
071695	B14-38	071794	B12-19	071875	B14-41	071926	B14-51
071696	B14-38	071795	B12-19	071876	B14-41	071927	B14-51
071697	B14-38	071796	B12-19	071877	B14-41	071928	B14-51
071698	B14-38	071797	B12-19	071878	B14-41	071929	B14-51
071699	B14-38	071798	B12-19	071879	B14-41	071930	B14-51
071700	B14-38	071799	B12-19	071880	B14-41	071931	B14-51
071701	B14-38	071800	B12-19	071881	B14-41	071932	B14-51
071702	B14-38	071801	B12-19	071882	B14-41	071933	B14-51
071703	B14-38	071802	B12-19	071883	B14-41	071934	B14-51
071704	B14-38	071803	B12-19	071884	B14-41	071935	B14-51
071705	B14-38	071804	B12-19	071885	B14-41	071936	B14-51
071706	B14-49	071805	B12-19	071886	B14-41	071937	B14-51
071707	B14-49	071806	B12-19	071887	B14-41	071938	B14-51
071708	B14-49	071807	B12-19	071888	B14-41	071939	B14-51
071709	B14-49	071808	B12-19	071889	B14-41	071940	B12-21
071710	B14-49	071809	B12-19	071890	B14-41	071941	B12-21
071711	B14-49	071810	B12-19	071891	B14-41	071942	B12-21
071712	B14-49	071811	B12-19	071892	B14-41	071943	B12-21
071713	B14-49	071812	B12-19	071893	B14-41	071944	B12-21
071714	B14-49	071813	B12-19	071894	B14-41	071945	B12-21
071715	B14-49	071814	B12-19	071895	B14-41	071946	B12-21
071716	B14-49	071815	B12-19	071896	B14-41	071947	B12-21
071717	B14-49	071816	B12-19	071897	B14-41	071948	B12-21
071718	B14-49	071817	B12-19	071898	B14-41	071949	B12-21
071719	B14-49	071821	B12-27	071899	B14-41	071950	B12-21
071720	B14-49	071822	B12-27	071900	B14-41	071951	B12-21
071721	B14-49	071823	B12-27	071901	B14-41	071952	B12-21
071722	B14-49	071824	B12-27	071902	B14-41	071953	B12-21
071723	B14-49	071825	B12-27	071903	B14-41	071954	B12-21
071724	B14-49	071826	B12-27	071904	B14-41	071955	B12-21
071725	B14-49	071827	B12-27	071905	B14-41	071956	B12-21
071726	B14-49	071828	B12-27	071906	B14-51	071957	B12-21
071727	B14-49	071832	B12-27	071907	B14-51	071958	B12-21
071728	B14-49	071833	B12-27	071908	B14-51	071959	B12-21
071729	B14-49	071834	B12-27	071909	B14-51	071960	B12-21
071730	B14-49	071835	B12-27	071910	B14-51	071961	B12-21
071731	B14-49	071836	B12-27	071911	B14-51	071962	B12-29
071732	B14-49	071837	B12-27	071912	B14-51	071963	B12-29
071733	B14-49	071838	B12-27	071913	B14-51	071964	B12-29
071734	B14-49	071839	B12-27	071914	B14-51	071965	B12-29
071735	B14-49	071864	B14-41	071915	B14-51	071966	B12-29
071736	B14-49	071865	B14-41	071916	B14-51	071967	B12-29

PART NUMBER INDEX

DODGE®

Part Number	Page	Part Number	Page	Part Number	Page	Part Number	Page
071968	B12-29	072181	B14-78	072232	B14-80	072285	B14-91
071969	B12-29	072182	B14-78	072233	B14-80	072286	B14-91
071970	B12-29	072183	B14-78	072234	B14-80	072287	B14-91
071971	B12-29	072184	B14-79	072235	B14-80	072288	B14-91
071972	B12-29	072185	B14-79	072237	B14-80	072289	B14-91
071973	B12-29	072186	B14-79	072238	B14-80	072290	B14-91
071974	B12-29	072187	B14-79	072239	B14-80	072291	B14-91
071975	B12-29	072188	B14-79	072240	B14-80	072292	B14-91
071976	B12-29	072189	B14-79	072241	B14-80	072293	B14-91
071977	B12-29	072190	B14-79	072242	B14-80	072294	B14-91
071983	B16-16	072191	B14-79	072243	B14-80	072295	B14-91
071984	B16-16	072192	B14-79	072244	B14-80	072296	B14-91
071985	B16-16	072193	B14-79	072245	B14-80	072297	B14-91
071986	B16-16	072194	B14-79	072246	B14-80	072298	B14-91
071987	B16-16	072195	B14-79	072247	B14-80	072299	B14-91
071988	B16-16	072196	B14-79	072248	B14-80	072300	B14-91
071989	B16-16	072197	B14-79	072249	B14-80	072301	B14-91
071990	B16-16	072198	B14-78	072250	B14-80	072302	B14-91
071991	B16-16	072199	B14-78	072251	B14-80	072303	B14-91
071992	B16-16	072200	B14-78	072252	B14-80	072304	B14-91
071993	B16-16	072201	B14-78	072253	B14-80	072305	B14-91
071994	B16-16	072202	B14-78	072254	B14-80	072306	B14-91
071995	B16-16	072203	B14-78	072255	B14-80	072307	B14-91
071996	B16-16	072204	B14-78	072256	B14-80	072308	B14-91
071997	B16-16	072205	B14-78	072257	B14-80	072309	B14-91
071998	B16-16	072206	B14-78	072258	B14-80	072310	B14-91
072000	B14-60	072207	B14-78	072259	B14-80	072311	B14-91
072001	B14-60	072208	B14-78	072260	B14-80	072312	B14-91
072002	B14-60	072209	B14-78	072262	B14-80	072313	B14-91
072003	B14-60	072210	B14-78	072263	B14-80	072314	B14-91
072004	B14-60	072211	B14-78	072264	B14-80	072315	B14-91
072005	B14-60	072212	B14-79	072265	B14-80	072316	B14-91
072006	B14-60	072213	B14-79	072266	B14-80	072317	B14-91
072014	B14-60	072214	B14-79	072267	B14-80	072318	B14-91
072015	B14-60	072215	B14-79	072268	B14-80	072319	B14-91
072016	B14-60	072216	B14-79	072269	B14-80	072320	B14-91
072017	B14-60	072217	B14-79	072270	B14-80	072321	B14-91
072018	B14-60	072218	B14-79	072271	B14-80	072322	B14-91
072019	B14-60	072219	B14-79	072272	B14-80	072323	B14-91
072020	B14-60	072220	B14-79	072273	B14-80	072324	B14-91
072170	B14-78	072221	B14-79	072274	B14-80	072325	B14-91
072171	B14-78	072222	B14-79	072275	B14-80	072326	B14-91
072172	B14-78	072223	B14-79	072276	B14-91	072327	B14-91
072173	B14-78	072224	B14-79	072277	B14-91	072328	B14-91
072174	B14-78	072225	B14-79	072278	B14-91	072329	B14-91
072175	B14-78	072226	B14-80	072279	B14-91	072330	B14-91
072176	B14-78	072227	B14-80	072280	B14-91	072331	B14-91
072177	B14-78	072228	B14-80	072281	B14-91	072332	B14-91
072178	B14-78	072229	B14-80	072282	B14-91	072333	B14-91
072179	B14-78	072230	B14-80	072283	B14-91	072334	B14-91
072180	B14-78	072231	B14-80	072284	B14-91	072335	B14-91

PART NUMBER INDEX

DODGE®

Part Number	Page	Part Number	Page	Part Number	Page	Part Number	Page
072336	B14-91	072389	B12-37	072524	B14-106	072899	B14-65, B16-22
072337	B14-91	072390	B12-37	072525	B14-106	072900	B14-65, B16-22
072338	B14-94	072391	B12-37	072526	B12-50, B14-106	072901	B14-65, B16-22
072339	B14-94	072392	B12-37	072527	B14-106	072902	B14-65, B16-22
072340	B14-94	072393	B12-37	072528	B14-106	072903	B14-65, B16-22
072341	B14-94	072394	B12-37	072529	B12-50, B14-106	072904	B14-65, B16-22
072342	B14-94	072395	B12-37	072530	B14-106	072905	B14-65, B16-22
072343	B14-94	072396	B12-37	072531	B14-106	072906	B14-65, B16-22
072344	B14-94	072397	B12-37	072532	B12-50	072907	B14-65, B16-22
072345	B14-94	072398	B12-37	072533	B14-106	072910	B14-60
072346	B14-94	072399	B12-37	072534	B14-106	072911	B14-60
072347	B14-94	072400	B12-37	072535	B12-50	072912	B14-65, B16-22
072348	B14-94	072401	B12-37	072536	B14-106	072913	B14-65, B16-22
072349	B14-94	072402	B12-37	072564	B14-60	072914	B14-65, B16-22
072350	B14-94	072403	B12-37	072565	B14-60	072915	B14-65, B16-22
072351	B14-94	072404	B12-37	072566	B14-60	072916	B14-65, B16-22
072352	B14-94	072405	B12-37	072567	B14-60	072917	B14-65, B16-22
072353	B14-94	072406	B12-37	072572	B14-60	072918	B14-65, B16-22
072354	B14-94	072407	B12-37	072573	B14-60	072919	B14-65, B16-22
072355	B14-94	072408	B12-37	072574	B14-60	072920	B14-65, B16-22
072356	B14-94	072409	B12-37	072575	B14-60	072921	B14-65, B16-22
072358	B14-94	072410	B12-37	072688	B14-60	072922	B14-65, B16-22
072359	B14-94	072411	B12-37	072690	B14-60	072923	B14-65, B16-22
072360	B14-94	072412	B12-37	072692	B14-60	072924	B14-65, B16-22
072361	B14-94	072413	B12-37	072693	B14-60	072954	B14-60
072362	B14-94	072490	B14-60	072706	B14-60	072955	B14-60
072363	B14-94	072492	B14-60	072708	B14-60	072958	B14-60
072364	B14-94	072500	B14-106	072710	B14-60	072959	B14-60
072365	B14-94	072501	B14-106	072711	B14-60	072962	B14-60
072366	B14-94	072502	B14-106	072742	B14-60	072963	B14-60
072367	B14-94	072503	B12-50, B14-106	072744	B14-60	072966	B14-60
072368	B14-94	072504	B12-50, B14-106	072746	B14-60	072967	B14-60
072369	B14-94	072505	B12-50, B14-106	072747	B14-60	073006	B4-100
072370	B14-94	072506	B12-50, B14-106	072771	B14-60	073007	B2-24
072371	B14-94	072507	B14-106	072772	B14-60	073008	B2-30
072372	B14-94	072508	B12-50, B14-106	072786	B14-60	073065	B4-100
072373	B14-94	072509	B12-50, B14-106	072789	B14-60	073069	B6-52
072374	B14-94	072510	B12-50, B14-106	072791	B14-60	073070	B14-58
072375	B14-94	072511	B14-106	072792	B14-60	073071	B14-58
072376	B14-94	072512	B12-50, B14-106	072820	B14-60	073072	B6-31
072377	B14-94	072513	B12-50, B14-106	072822	B14-60	073139	B4-50
072378	B14-94	072514	B12-50, B14-106	072831	B14-60	073222	B5-28
072379	B14-94	072515	B14-106	072833	B14-60	073224	B2-64
072380	B14-94	072516	B14-106	072835	B14-60	073279	B6-34
072382	B14-94	072517	B14-106	072836	B14-60	073280	B4-100
072383	B14-94	072518	B12-50, B14-106	072857	B14-60	073282	B4-12
072384	B14-94	072519	B14-106	072859	B14-60	073287	B4-84
072385	B14-94	072520	B12-50, B14-106	072895	B14-65, B16-22	073304	B6-22
072386	B12-37	072521	B14-106	072896	B14-65, B16-22	073332	B6-53
072387	B12-37	072522	B12-50, B14-106	072897	B14-65, B16-22	073338	B6-36
072388	B12-37	072523	B12-50, B14-106	072898	B14-65, B16-22	073358	B4-24

PART NUMBER INDEX

DODGE®

Part Number	Page
073381	B4-14
073396	B2-31
073406	B2-54
073416	B4-28
073418	B4-24
073430	B4-72
073479	B6-22
073492	B4-42
073561	B14-56
073562	B14-56
073634	B4-90, B4-94
073638	B2-56
073651	B2-56
073662	B4-34
073669	B4-50
073687	B6-50
073724	B4-16
073753	B6-28
073769	B4-56
073772	B4-100
073793	B4-74
073836	B2-68
073848	B6-22
073849	B5-28
073850	B5-28
073911	B4-62
073914	B6-22
073924	B6-12
073926	B6-12
073938	B14-58
073950	B4-60
073960	B5-12
073970	B4-70
073992	B4-18
074008	B4-59
074017	B5-34
074115	B14-60
074117	B14-60
074162	B4-12
074163	B6-44
074223	B4-99
074237	B4-100
074254	B6-50
074267	B16-61
074270	B16-61
074287	B4-48
074288	B4-48
074308	B6-46
074353	B5-14
074372	B6-42
074381	B4-28
074396	B4-40
074505	B4-88
074512	B2-26
074530	B4-99
074593	B6-12
074613	B14-58
074614	B14-58
074631	B2-26
074632	B2-64
074714	B4-54
074781	B6-34
074782	B6-34
074818	B6-28
074828	B4-99
074867	B14-58
074868	B14-58
074926	B4-24
074935	B4-74
074989	B16-18
075014	B4-90
075020	B4-62
075045	B6-12
075048	B6-16
075049	B6-16
075051	B6-16
075052	B6-16
075096	B2-46
075105	B4-26
075153	B6-46
075154	B16-18
075221	B5-28
075222	B5-28
075248	B2-31
075262	B4-28
075286	B6-51
075306	B14-58
075313	B5-44
075314	B5-44
075329	B4-16
075431	B14-58
075432	B14-58
075444	B14-58
075489	B5-32
075524	B6-54
075546	B3-8
075676	B5-28
075677	B5-28
075679	B5-38
075697	B3-18
075700	B5-36
075714	B4-90, B4-94
075728	B6-54
075765	B4-54
075775	B3-21
075792	B5-44
075913	B2-35
075974	B14-110
075975	B14-110
075976	B14-110
075977	B14-110
075978	B14-110
075979	B14-110
075980	B14-110
075981	B14-110
075982	B14-110
075983	B14-110
076000	B3-8
076001	B3-8
076002	B3-8
076003	B3-8
076004	B3-8
076005	B3-8, B3-14
076006	B3-8
076007	B3-8
076008	B3-10
076009	B3-10
076010	B3-10
076011	B3-10
076012	B3-10
076014	B3-10
076015	B3-10
076016	B3-10
076017	B3-16
076018	B3-16
076019	B3-16
076020	B3-16
076021	B3-16
076022	B3-16
076023	B3-16
076024	B3-16
076025	B3-16
076026	B3-16
076027	B3-16
076028	B3-16
076029	B3-16
076030	B3-16
076031	B3-17
076032	B3-17
076033	B3-17
076034	B3-17
076035	B3-17
076036	B3-17
076037	B3-17
076038	B3-17
076039	B3-18
076040	B3-18
076041	B3-18
076042	B3-18
076043	B3-18
076044	B3-18
076045	B3-18
076046	B3-20
076047	B3-20
076048	B3-20
076049	B3-20
076050	B3-20
076051	B3-20
076052	B3-20
076053	B3-20
076054	B3-20
076055	B3-21
076056	B3-21
076057	B3-21
076058	B3-21
076059	B3-21
076060	B3-21
076061	B3-21
076062	B3-21
076063	B3-23
076064	B3-23
076065	B3-23, B3-24
076066	B3-23
076067	B3-23
076068	B3-23
076069	B3-23
076070	B3-23
076071	B3-23
076072	B3-23
076073	B3-23
076074	B3-23
076075	B3-23
076076	B3-25
076077	B3-25
076078	B3-25
076079	B3-25
076080	B3-25
076081	B3-25, B3-28
076082	B3-25
076083	B3-25
076084	B3-26
076085	B3-26
076086	B3-26
076087	B3-26

PART NUMBER INDEX

DODGE®

Part Number	Page	Part Number	Page	Part Number	Page	Part Number	Page
076088	B3-26	076139	B3-14	076190	B3-34	076241	B3-17
076089	B3-26	076140	B3-14	076191	B3-34	076242	B3-17
076090	B3-26	076141	B3-19	076192	B3-34	076243	B3-18
076091	B3-30	076142	B3-19	076193	B3-34	076244	B3-18
076092	B3-30	076143	B3-19	076194	B3-34	076245	B3-18
076093	B3-30	076144	B3-19	076195	B3-34	076246	B3-20
076094	B3-30	076145	B3-19	076196	B3-36	076247	B3-20
076095	B3-30	076146	B3-19	076197	B3-32, B3-36	076248	B3-20
076096	B3-30, B3-34	076147	B3-19	076198	B3-36	076249	B3-20
076097	B3-30	076148	B3-18, B3-19	076199	B3-36	076250	B3-20
076098	B3-30	076149	B3-19	076200	B3-32, B3-36	076251	B3-21
076099	B3-30	076150	B3-22	076201	B3-36	076252	B3-21
076100	B3-32	076151	B3-22	076202	B3-36	076253	B3-21
076101	B3-32	076152	B3-22	076203	B3-36	076254	B3-21
076102	B3-32	076153	B3-22	076204	B3-40	076255	B3-21
076103	B3-32	076154	B3-22	076205	B3-40	076256	B3-21
076104	B3-32	076155	B3-22	076206	B3-40	076257	B3-23
076105	B3-32	076156	B3-22	076207	B3-40	076258	B3-23
076106	B3-32	076157	B3-21, B3-22	076208	B3-40	076259	B3-23
076107	B3-32	076158	B3-22	076209	B3-40	076260	B3-23
076108	B3-38	076159	B3-22	076210	B3-40	076261	B3-23
076109	B3-38	076160	B3-21, B3-22	076211	B3-39, B3-40	076262	B3-23
076110	B3-38	076161	B3-22	076212	B3-40	076263	B3-23
076111	B3-38	076162	B3-22	076213	B3-40	076264	B3-23
076112	B3-38	076163	B3-22, B3-23	076214	B3-39, B3-40	076265	B3-25
076113	B3-38, B3-40	076164	B3-22	076215	B3-40	076266	B3-25
076114	B3-38	076165	B3-22	076216	B3-40	076267	B3-25
076115	B3-38	076166	B3-24	076217	B3-40	076268	B3-25
076116	B3-39, B3-40	076167	B3-24	076218	B3-40	076269	B3-26
076117	B3-39	076168	B3-24	076219	B3-40	076270	B3-26
076118	B3-39	076169	B3-24	076220	B3-8	076271	B3-26
076119	B3-39	076170	B3-24	076221	B3-8	076272	B3-26
076120	B3-39	076171	B3-24	076222	B3-8	076273	B3-26
076121	B3-39	076172	B3-24	076223	B3-8	076274	B3-30
076122	B3-39	076173	B3-24	076224	B3-10	076275	B3-30
076123	B3-39	076174	B3-24	076225	B3-10	076276	B3-30
076124	B3-39	076175	B3-24	076226	B3-10	076277	B3-30
076125	B3-14	076176	B3-23, B3-24	076227	B3-10	076278	B3-30
076126	B3-14	076177	B3-24	076228	B3-10	076279	B3-32
076127	B3-14	076178	B3-24	076229	B3-10	076280	B3-32
076128	B3-14	076179	B3-24	076230	B3-10	076281	B3-32
076129	B3-14	076180	B3-24	076231	B3-16	076282	B3-32
076130	B3-14	076181	B3-28	076232	B3-16	076283	B3-32
076131	B3-14	076182	B3-28	076233	B3-16	076284	B3-32
076132	B3-10, B3-14	076183	B3-28	076234	B3-16	076286	B3-38
076133	B3-10, B3-14	076184	B3-28	076235	B3-16	076287	B3-38, B3-40
076134	B3-14	076185	B3-28	076236	B3-16	076288	B3-38
076135	B3-10, B3-14	076186	B3-28	076237	B3-16	076289	B3-39
076136	B3-14	076187	B3-28	076238	B3-16	076290	B3-39
076137	B3-14	076188	B3-26, B3-28	076239	B3-17	076291	B3-39
076138	B3-14	076189	B3-28	076240	B3-17	076292	B3-39

PART NUMBER INDEX

Part Number	Page	Part Number	Page	Part Number	Page	Part Number	Page
076293	B3-39	076346	B3-40	077213	B10-39	077264	B10-34
076294	B3-39	076347	B3-40	077214	B10-39	077265	B10-34
076295	B3-39	076348	B3-40	077215	B10-39	077266	B10-34
076296	B3-14	076349	B3-40	077216	B10-39	077267	B10-36
076297	B3-14	076350	B3-40	077217	B10-39	077268	B10-36
076298	B3-14	076351	B3-40	077218	B10-39	077269	B10-36
076299	B3-14	076352	B3-40	077219	B10-39	077270	B10-36
076300	B3-14	076353	B3-40	077220	B10-39	077271	B10-36
076301	B3-14	076354	B3-40	077221	B10-34	077272	B10-36
076302	B3-14	076410	B3-28	077222	B10-34	077273	B10-36
076303	B3-14	076411	B3-28	077223	B10-34	077274	B10-36
076304	B3-14	076412	B3-28	077224	B10-34	077275	B10-36
076305	B3-14	076413	B3-28	077225	B10-34	077276	B10-36
076306	B3-14	076414	B3-28	077226	B10-34	077277	B10-36
076307	B3-19	076415	B3-28	077227	B10-34	077278	B10-36
076308	B3-19	076416	B3-28	077228	B10-34	077279	B10-36
076309	B3-19	076545	B3-12	077229	B10-34	077280	B10-36
076310	B3-19	076548	B6-22	077230	B10-34	077281	B10-36
076311	B3-19	076558	B4-100	077231	B10-34	077282	B10-36
076312	B3-19	076584	B2-32	077232	B10-34	077283	B10-36
076313	B3-22	076602	B4-38	077233	B10-34	077284	B10-36
076314	B3-22	076608	B6-34	077234	B10-34	077285	B10-36
076315	B3-22	076609	B4-58	077235	B10-34	077286	B10-36
076316	B3-22	076648	B3-22	077236	B10-34	077287	B10-36
076317	B3-22, B3-24	076649	B3-21	077237	B10-34	077288	B10-36
076318	B3-22	076670	B16-18	077238	B10-34	077289	B10-36
076319	B3-22	076714	B6-16	077239	B10-34	077290	B10-36
076320	B3-22	076763	B5-14	077240	B10-34	077291	B10-36
076321	B3-22	076777	B6-46	077241	B10-34	077292	B10-36
076322	B3-22	076841	B2-56	077242	B10-34	077293	B10-36
076323	B3-22	077192	B10-39	077243	B10-34	077294	B10-36
076324	B3-24	077193	B10-39	077244	B10-34	077295	B10-36
076325	B3-24	077194	B10-39	077245	B10-34	077296	B10-36
076326	B3-24	077195	B10-39	077246	B10-34	077297	B10-36
076328	B3-24	077196	B10-39	077247	B10-34	077298	B10-36
076329	B3-24	077197	B10-39	077248	B10-34	077299	B10-36
076330	B3-24	077198	B10-39	077249	B10-34	077300	B10-36
076331	B3-24	077199	B10-39	077250	B10-34	077416	B5-12
076332	B3-24	077200	B10-39	077251	B10-34	077417	B5-12
076333	B3-24	077201	B10-39	077252	B10-34	077418	B3-16
076334	B3-34	077202	B10-39	077253	B10-34	077453	B3-12
076335	B3-34	077203	B10-39	077254	B10-34	077458	B14-58
076336	B3-34	077204	B10-39	077255	B10-34	077462	B3-26
076337	B3-34	077205	B10-39	077256	B10-34	077471	B5-18
076338	B3-34	077206	B10-39	077257	B10-34	077473	B14-58
076339	B3-36	077207	B10-39	077258	B10-34	077481	B16-18
076340	B3-36	077208	B10-39	077259	B10-34	077561	B14-58
076341	B3-36	077209	B10-39	077260	B10-34	077587	B18-30
076342	B3-36	077210	B10-39	077261	B10-34	077588	B18-30
076343	B3-36	077211	B10-39	077262	B10-34	077589	B18-30
076344	B3-40	077212	B10-39	077263	B10-34	077646	B14-56

PART NUMBER INDEX

Part Number	Page	Part Number	Page	Part Number	Page	Part Number	Page
077647	B14-56	087186	B11-9	089035	B19-37	104006	B11-36
077648	B14-56	087187	B11-9	089036	B19-37	104010	B11-36
077649	B14-56	087188	B11-11	089037	B19-37	104013	B11-36
077650	B14-56	087189	B11-11	089038	B19-37	104016	B11-36
077651	B14-56	087190	B11-11	089039	B19-37	104017	B11-36
077652	B14-58	087191	B11-11	089040	B19-37	104018	B11-36
077660	B14-58	087192	B11-11	089041	B19-37	104019	B11-36
077661	B14-58	087193	B11-11	089042	B19-37	104020	B11-36
077662	B14-58	087194	B11-14	089043	B19-37	104021	B11-36
077773	B3-18	087195	B11-14	089044	B19-37	104022	B11-36
077777	B4-26	087196	B11-14	089045	B19-37	104023	B11-36
077897	B14-58	087197	B11-14	089046	B19-37	104024	B11-36
077921	B4-97	087198	B11-14	089047	B19-37	104025	B11-36
077923	B4-97	087199	B11-14	089048	B19-37	104026	B11-36
077940	B4-97	087200	B11-14	089150	B19-37	104027	B11-36
077941	B4-97	087205	B11-14	089151	B19-37	104028	B11-36
077942	B4-97	087207	B11-14	089152	B19-37	104029	B11-36
077943	B4-97	087209	B11-14	089153	B19-37	104030	B11-36
077944	B4-97	087210	B11-14	089154	B19-37	104031	B11-36
077945	B4-97	087211	B11-14	089155	B19-37	104032	B11-36
077946	B4-97	087212	B11-14	089156	B19-37	104033	B11-36
077947	B4-97	087215	B11-14	089600	B19-37	104034	B11-36
077948	B4-97	087218	B11-14	089601	B19-37	104035	B11-36
077949	B4-97	087220	B11-14	089602	B19-37	104036	B11-36
077950	B4-97	087221	B11-14	089603	B19-37	104037	B11-36
077957	B4-97	087222	B11-14	089604	B19-37	104038	B11-36
077958	B4-97	087224	B11-14	089782	B19-15	104039	B11-36
077959	B4-97	087225	B11-14	089783	B19-15	104040	B11-13
077960	B4-97	087262	B11-9	089784	B19-15	104041	B11-13
077976	B4-97	087263	B11-9	089785	B19-15	104042	B11-13
077977	B4-97	087264	B11-9	089786	B19-15	104043	B11-13
077978	B4-97	087265	B11-9	089787	B19-15	104044	B11-13
077979	B4-97	087266	B11-9	089788	B19-15	104045	B11-13
077980	B4-97	087267	B11-9	089789	B19-15	104046	B11-13
077981	B4-97	087268	B11-9	089790	B19-15	104050	B11-13
077982	B4-97	087269	B11-9	089791	B19-15	104051	B11-13
077983	B4-97	089020	B19-37	089792	B19-15	104052	B11-13
077984	B4-97	089021	B19-37	089793	B19-15	104053	B11-13
077985	B4-97	089022	B19-37	089794	B19-15	104054	B11-13
077986	B4-97	089023	B19-37	089795	B19-15	104055	B11-13
077993	B4-97	089024	B19-37	089796	B19-15	104056	B11-13
077995	B4-97	089025	B19-37	089797	B19-15	104078	B11-13
077996	B4-97	089026	B19-37	089798	B19-15	104090	B11-13
087172	B11-9	089027	B19-37	089799	B19-15	104106	B11-13
087178	B11-9	089028	B19-37	089800	B19-15	104119	B11-13
087180	B11-9	089029	B19-37	089801	B19-15	104160	B11-36
087181	B11-9	089030	B19-37	089802	B19-15	104161	B11-36
087182	B11-9	089031	B19-37	089803	B19-15	104162	B11-36
087183	B11-9	089032	B19-37	089804	B19-15	104164	B11-36
087184	B11-9	089033	B19-37	093733	B4-36	104169	B11-36
087185	B11-9	089034	B19-37	104003	B11-36	104170	B11-36

PART NUMBER INDEX

Part Number	Page
104172	B11-36
104173	B11-36
104176	B11-36
104177	B11-36
104181	B11-36
104195	B11-36
104196	B11-36
104197	B11-36
104199	B11-36
104204	B11-36
104205	B11-36
104207	B11-36
104208	B11-36
104211	B11-36
104212	B11-36
104216	B11-36
123069	B2-42
123070	B2-42
123071	B2-42
123072	B2-42
123073	B2-42
123074	B2-42
123075	B2-42
123076	B2-42
123077	B2-42
123170	B4-12
123171	B4-20
123172	B4-34
123173	B4-54
123174	B4-70
123175	B4-74
123176	B4-86
123177	B4-87
123183	B4-16
123184	B4-38
123234	B2-42
123235	B8-24
123326	B4-90
123328	B4-88, B4-97
123329	B4-88, B4-97
123330	B4-88
123331	B4-88
123332	B4-88
123333	B4-88
123334	B4-88
123335	B4-88
123336	B4-88
123337	B4-88
123338	B4-88
123339	B4-88, B4-94
123340	B4-88
123341	B4-88
123342	B4-90, B4-94
123343	B4-90
123344	B4-90
123345	B4-90
123346	B4-90
123347	B4-90
123348	B4-90
123349	B4-90
123350	B4-90
123352	B4-90
123353	B4-94
123354	B4-94
123355	B4-94
123356	B4-94
123357	B4-94
123358	B4-90, B4-94
123359	B4-94
123360	B4-90, B4-94
123361	B4-94
123362	B4-90, B4-94
123363	B4-94
123364	B4-94
123365	B4-94
123366	B4-94
123367	B4-94
123368	B4-88
123409	B2-42
123413	B2-42
123419	B4-94
123420	B4-94
123460	B2-42
123469	B4-88
123580	B8-8
123581	B8-8
123582	B8-8
123583	B8-10
123584	B8-10
123585	B8-10
123586	B8-10
123587	B8-10
123588	B8-10
123589	B4-20, B8-8
123590	B8-8
123593	B8-10
123595	B8-12
123596	B8-12
123597	B8-12
123598	B8-12
123599	B8-12
123600	B8-12
123601	B8-12
123602	B8-12
123603	B8-12
123604	B8-8
123605	B8-12
123606	B8-8
123607	B8-12
123610	B8-14
123611	B8-14
123612	B8-14
123613	B8-14
123614	B8-14
123615	B8-14
123616	B8-14
123617	B8-14
123618	B8-14
123619	B8-14
123625	B8-16
123626	B8-16
123627	B8-16
123628	B8-16
123629	B8-16
123630	B8-16
123631	B8-16
123632	B8-16
123633	B8-16
123634	B8-16
123636	B4-14
123652	B8-16
123680	B8-18
123693	B4-22
123694	B8-14
123725	B4-16, B4-22
123727	B4-20
123728	B4-14
123730	B4-38
123731	B4-38
123732	B4-38
123733	B4-38, B4-44
123734	B4-38
123735	B4-39
123736	B4-39
123737	B4-39
123738	B4-39
123740	B4-58
123741	B4-58
123742	B4-58
123743	B4-58, B4-62
123744	B4-58
123745	B4-58
123746	B4-59
123747	B4-59
123748	B4-59
123749	B4-59
123750	B4-59
123751	B4-59
123753	B4-12
123754	B4-12
123755	B4-44
123756	B4-44
123757	B4-44
123758	B4-44
123760	B4-62
123761	B4-62
123762	B4-62
123763	B4-62
123764	B4-62
123765	B4-62
123766	B4-62
123767	B4-62
123768	B4-62
123769	B4-62
123781	B4-12
123782	B4-14
123783	B4-14
123784	B4-14
123790	B4-16
123792	B4-12
123793	B4-14
123803	B4-12
123804	B4-12
123805	B4-12
123806	B4-12
123807	B4-12
123808	B4-12
123809	B4-12
123810	B4-12, B4-24, B4-26
123811	B4-12
123812	B4-12
123813	B4-12
123814	B4-14
123815	B4-14
123816	B4-14
123817	B4-14
123818	B4-14
123819	B4-14
123820	B4-14
123821	B4-14
123822	B4-14
123823	B4-14
123824	B4-12

PART NUMBER INDEX

DODGE®

Part Number	Page
123828	B4-12
123829	B4-14
123830	B4-12, B4-20
123831	B4-12, B4-20
123835	B4-12
123836	B4-12
123839	B4-14
123854	B4-20
123855	B4-20
123856	B4-20
123857	B4-20
123858	B4-20
123860	B4-20
123861	B4-20
123862	B4-20
123863	B4-20
123864	B4-20
123865	B4-20
123866	B4-20
123867	B4-20
123868	B4-20
123869	B4-20
123870	B4-20
123871	B4-20
123872	B4-20
123873	B4-20
123874	B4-20
123875	B4-20
123877	B4-12
123878	B4-12
123879	B4-12
123894	B4-12
123903	B4-16
123904	B4-16
123905	B4-16
123906	B4-16
123907	B4-16, B4-28
123908	B4-16
123909	B4-18
123910	B4-18
123911	B4-18
123912	B4-18
123913	B4-18
123914	B4-18
123915	B4-18
123916	B4-16
123918	B4-22
123919	B4-16
123932	B4-12
123933	B4-12, B4-26
123936	B4-22
123938	B4-22
123939	B4-14
123958	B4-16, B4-22
123959	B4-22
123960	B4-22
123961	B4-22
123962	B4-22
123963	B4-22
123964	B4-22
123965	B4-22
123966	B4-22
123987	B4-14
124034	B4-36
124048	B4-54
124049	B4-54
124098	B4-54
124099	B4-54
124100	B4-54
124101	B4-54
124102	B4-54
124103	B4-54
124148	B4-87
124149	B4-87
124166	B4-34
124167	B4-34
124170	B4-34
124171	B4-34
124172	B4-34
124173	B4-34
124174	B4-34
124175	B4-34
124176	B4-34
124198	B4-34
124199	B4-34
124204	B4-54
124205	B4-54
124206	B4-54, B4-60
124207	B4-54
124208	B4-54
124209	B4-56
124210	B4-56
124211	B4-56
124212	B4-56
124213	B4-56
124214	B4-56
124215	B4-56
124216	B4-56
124217	B4-56
124218	B4-54
124219	B4-54
124220	B4-56
124224	B4-66, B4-68
124225	B4-66
124226	B4-66
124227	B4-66
124228	B4-66
124229	B4-66
124230	B4-66
124231	B4-66
124232	B4-66
124233	B4-66
124235	B4-66
124236	B4-66
124237	B4-66
124240	B4-86
124242	B4-86
124244	B4-38
124245	B4-86
124246	B4-58
124250	B4-87
124251	B4-87
124253	B4-87
124256	B4-34
124261	B4-56
124268	B4-36
124269	B4-36
124270	B4-36
124274	B4-34
124275	B4-34
124276	B4-34, B4-42
124277	B4-34
124278	B4-34
124279	B4-36
124280	B4-36
124282	B4-36
124290	B4-84
124291	B4-84
124292	B4-84
124293	B4-84
124299	B4-84
124373	B4-36
124393	B4-86
124394	B4-87
124395	B4-59
124404	B4-84
124405	B4-84
124406	B4-84
124408	B4-84
124409	B4-84
124410	B4-34
124411	B4-34
124412	B4-36
124413	B4-36
124419	B4-84
124420	B4-86
124421	B4-86
124422	B4-86
124423	B4-86
124424	B4-86
124427	B4-87
124428	B4-87
124429	B4-87
124430	B4-87
124435	B4-50
124436	B4-50
124437	B4-50
124438	B4-50
124439	B4-50
124440	B4-50
124441	B4-50
124442	B4-50
124443	B4-50
124444	B4-50
124445	B4-50
124446	B4-50
124447	B4-50
124448	B4-50
124450	B4-50
124460	B4-32
124461	B4-32
124462	B4-32
124463	B4-32
124464	B4-32
124465	B4-32
124466	B4-32
124467	B4-32
124468	B4-32
124469	B4-32
124470	B4-32
124471	B4-32
124472	B4-32
124473	B4-32
124474	B9-12
124478	B4-32
124479	B4-32
124480	B4-32
124567	B4-54
124578	B4-66
124579	B4-66
124582	B4-66
124587	B4-66
124590	B9-22
124591	B9-22

PART NUMBER INDEX

DODGE®

Part Number	Page
124600	B4-52
124601	B4-52
124602	B4-52
124603	B4-52
124604	B4-52
124605	B4-52
124606	B4-52
124607	B4-52
124608	B4-52
124609	B4-52
124610	B4-52
124611	B4-52
124612	B4-52
124613	B4-52
124614	B4-34
124618	B4-34
124620	B4-52
124621	B4-52
124622	B4-52
124623	B4-52
124624	B4-52
124625	B4-52
124626	B4-52
124627	B4-52
124628	B4-52
124629	B4-52
124630	B4-52
124631	B4-52
124632	B4-52
124633	B4-52
124634	B9-22
124640	B4-46
124641	B4-46
124642	B4-46
124643	B4-46
124644	B4-46
124645	B4-46
124646	B4-46
124647	B4-46
124648	B4-46
124649	B4-46
124650	B4-46
124651	B4-46
124652	B4-46
124653	B4-46
124660	B4-46
124661	B4-46
124662	B4-46
124663	B4-46
124664	B4-46
124665	B4-46
124666	B4-46
124667	B4-46
124668	B4-46
124669	B4-46
124670	B4-46
124671	B4-46
124672	B4-46
124673	B4-46
124676	B9-18
124677	B9-18
124678	B9-18
124697	B9-18
124729	B4-66
124748	B9-18
124749	B9-18
124785	B4-34
124794	B4-39
124872	B4-18
124931	B2-42
124932	B2-42
124933	B8-10
124934	B4-52
124941	B4-20
124942	B4-36
124943	B4-20
124944	B4-20
124996	B4-84
125004	B2-42
125005	B2-42
125010	B4-74
125011	B4-74
125012	B4-74
125050	B4-70
125051	B4-70
125052	B4-70
125054	B4-70
125071	B4-76
125113	B4-74
125114	B4-74
125115	B4-76
125116	B4-76
125117	B4-76
125118	B4-76
125119	B4-76
125120	B4-74
125121	B4-76
125151	B4-76
125153	B4-70
125154	B4-70, B4-73
125155	B4-70
125156	B4-72
125157	B4-72
125158	B4-72
125159	B4-72
125160	B4-72
125162	B4-72
125169	B4-14, B4-26
125170	B4-56, B4-60
125171	B4-36, B4-42
125328	B4-70
125329	B4-70
125343	B4-74
125344	B4-74
125355	B4-74
125356	B4-74
125357	B4-74
125358	B4-74
125359	B4-74
125360	B4-74, B4-78
125361	B4-74
125362	B4-76
125363	B4-76
125364	B4-76
125365	B4-70
125366	B4-70
125367	B4-70
125368	B4-70
125369	B4-70
125370	B4-72
125371	B4-72
125372	B4-72
125373	B4-72
125378	B4-70
125384	B4-52
125500	B8-8, B8-12
125501	B8-8, B8-12
125502	B8-8
125503	B8-8
125504	B8-8
125505	B8-10
125506	B8-10
125507	B8-12
125508	B8-12
125509	B8-12
125510	B8-12
125511	B8-12
125512	B8-12
125513	B8-8
125514	B8-8
125515	B8-8
125516	B8-14
125517	B8-14
125518	B8-14
125519	B8-14
125520	B8-14
125521	B8-14
125522	B8-14
125523	B8-14
125524	B8-16
125525	B8-16
125526	B8-16
125527	B8-16
125528	B8-16
125529	B8-16, B9-16
125530	B8-16
125531	B8-16
125533	B8-18
125534	B8-18
125535	B8-18
125536	B8-18
125537	B8-18
125538	B8-18
125539	B8-18
125540	B8-18
125541	B8-18
125542	B8-18
125543	B8-18
125544	B8-18
125545	B8-18
125546	B8-18
125547	B8-18
125548	B8-18
125549	B8-20
125550	B8-20
125551	B8-20
125552	B8-20
125553	B8-20
125554	B8-20
125555	B8-20
125556	B8-20
125557	B8-20
125558	B8-20
125559	B8-22
125560	B8-22
125561	B8-22
125562	B8-22
125563	B8-22
125564	B8-22
125565	B8-22
125625	B7-40
125626	B7-40
125627	B7-40
125628	B7-40

PART NUMBER INDEX

DODGE®

Part Number	Page	Part Number	Page	Part Number	Page	Part Number	Page
125629	B7-40	125682	B7-24	125734	B9-16	125872	B4-66
125630	B7-40	125683	B7-24	125735	B9-16	125873	B2-42
125631	B7-40	125684	B7-24	125736	B9-16	125874	B2-42
125632	B7-40	125685	B8-8	125737	B9-16	125875	B4-34
125633	B7-40	125686	B8-8	125751	B8-8	125876	B4-34
125634	B7-40	125687	B8-8	125752	B8-14	125877	B4-34
125635	B7-40	125688	B8-8	125760	B4-20	125878	B4-34
125636	B4-97, B8-24	125689	B8-10	125768	B4-20	125879	B4-34
125637	B8-24	125690	B8-12	125800	B4-88, B4-97	125880	B4-36
125638	B8-24	125691	B8-10	125802	B4-88	125881	B4-36
125639	B8-24	125692	B8-10	125804	B4-88	125882	B4-36
125640	B8-24	125693	B8-10	125806	B4-88	125885	B4-54
125641	B8-24	125694	B8-16	125808	B4-88	125886	B4-54
125642	B8-24	125695	B8-16	125810	B4-90	125887	B4-54
125643	B8-24	125696	B8-16	125812	B4-90	125888	B4-54
125644	B9-34	125697	B8-16	125814	B4-90	125889	B4-54
125645	B9-34	125698	B8-16	125816	B4-90	125890	B4-56
125646	B9-34	125699	B8-16	125818	B4-90	125891	B4-56
125647	B9-34	125700	B8-16	125820	B4-90	125892	B4-56
125648	B9-34	125701	B8-16	125822	B4-90	125893	B4-56
125649	B9-34	125702	B8-16	125825	B4-94	125894	B4-56
125650	B9-34	125703	B8-14	125826	B4-94	125895	B4-56
125651	B9-34	125704	B8-14	125828	B4-94	125896	B4-56
125652	B9-34	125705	B8-14	125830	B4-94	125900	B4-70
125655	B7-12	125706	B8-14	125832	B4-94	125901	B4-70
125656	B7-12	125707	B8-14	125834	B4-94	125902	B4-70
125657	B7-12	125708	B8-14	125836	B4-94	125903	B4-70
125658	B7-12	125709	B8-14	125838	B4-94	125904	B4-72
125659	B7-12	125710	B8-14	125840	B4-94	125905	B4-72
125660	B7-18	125711	B9-6	125842	B4-94	125906	B4-72
125661	B7-14	125712	B9-6	125844	B4-94	125907	B4-72
125662	B7-14	125713	B9-6	125850	B4-12	125908	B4-72
125663	B7-14	125714	B9-6	125851	B4-12	125910	B4-74
125664	B7-14	125715	B9-6	125852	B4-12	125911	B4-74
125665	B7-14	125716	B9-10	125853	B4-12	125912	B4-74
125666	B7-28	125717	B9-8	125854	B4-12	125913	B4-74
125667	B7-28	125718	B9-8	125855	B4-12	125914	B4-74
125668	B7-28	125719	B9-8	125856	B4-20	125915	B4-76
125669	B7-28	125720	B9-24	125857	B4-14	125916	B4-76
125670	B7-28	125721	B9-24	125858	B4-14	125917	B4-76
125671	B7-28	125722	B9-24	125859	B4-14	125918	B4-76
125672	B7-28	125723	B9-24	125860	B4-14	125919	B4-76
125673	B7-28	125724	B9-24	125861	B4-14	125925	B4-24, B4-26
125674	B7-28	125725	B9-24	125862	B4-14	125926	B4-24, B4-26
125675	B7-28	125726	B9-24	125865	B4-66	125927	B4-24
125676	B7-28	125727	B9-24	125866	B4-66	125928	B4-26
125677	B7-24	125728	B9-24	125867	B4-66	125929	B4-24, B4-26
125678	B7-24	125730	B9-16	125868	B4-66	125930	B4-24, B4-26
125679	B7-24	125731	B9-16	125869	B4-66	125931	B4-24, B4-26
125680	B7-24	125732	B9-16	125870	B4-66	125932	B4-26
125681	B7-24	125733	B9-16	125871	B4-66	125933	B4-26

PART NUMBER INDEX

DODGE®

Part Number	Page
125934	B4-26
125935	B4-26
125937	B4-26
125940	B4-68
125941	B4-68
125942	B4-68
125943	B4-68
125944	B4-68
125945	B4-68
125946	B4-68
125947	B4-68
125948	B4-68
125949	B4-68
125954	B4-42
125955	B4-42
125956	B4-42
125957	B4-42
125958	B4-42
125960	B4-42
125965	B4-60
125966	B4-60
125967	B4-60
125968	B4-60
125969	B4-60
125970	B4-60
125971	B4-60
125972	B4-60
125973	B4-60
125974	B4-60
125975	B4-60
125980	B4-73
125981	B4-73
125982	B4-73
125983	B4-73
125984	B4-73
125985	B4-73
125986	B4-73
125989	B4-78
125990	B4-78
125991	B4-78
125992	B4-78
125993	B4-78
125994	B4-80
125995	B4-80
125996	B4-80
125997	B4-80
125998	B4-80
126042	B4-36
126049	B4-84
126102	B4-34
126110	B4-28
126112	B4-28
126121	B5-50
126147	B4-24, B4-26
126148	B4-26
126167	B4-68
126168	B4-68
126170	B4-68
126171	B4-68
126172	B4-68
126173	B4-68
126174	B4-68
126175	B4-66, B4-68
126176	B4-68
126177	B4-66, B4-68
126178	B4-68
126179	B4-66, B4-68
126180	B4-68
126182	B4-68
126183	B4-68
126184	B4-68
126186	B4-60
126187	B4-60
126188	B4-60
126189	B4-60
126190	B4-60
126191	B4-60
126192	B4-56, B4-60
126193	B4-60
126194	B4-60
126195	B4-56, B4-60
126196	B4-60
126197	B4-60
126198	B4-60
126199	B4-60
126226	B4-60
126227	B4-60
126270	B4-60
126283	B4-56, B4-60
126284	B4-42
126285	B4-42
126287	B4-42
126288	B4-42
126289	B4-42
126290	B4-42
126292	B4-42
126293	B4-36, B4-42
126405	B4-24
126406	B4-24
126407	B4-24
126408	B4-24
126409	B4-24
126415	B7-20
126416	B7-20
126417	B7-20
126418	B7-20
126419	B7-20
126450	B6-16
126451	B6-16
126452	B6-16
126453	B6-16
126454	B6-16
126475	B7-42
126476	B7-42
126477	B7-42
126478	B7-42
126479	B7-42
126480	B6-56
126481	B6-56
126482	B6-56
126483	B6-56
126484	B6-56
126485	B6-56
126486	B6-56
126487	B6-56
126488	B6-56
126489	B6-56
126495	B4-92
126496	B4-92
126497	B4-92
126498	B4-92
126499	B4-92
126500	B4-12
126502	B4-12
126503	B4-12
126504	B4-12
126505	B4-12
126510	B4-14
126513	B4-14
126516	B4-34
126518	B4-34, B4-42
126519	B4-34
126521	B4-36
126522	B4-36
126523	B4-36
126524	B4-54
126525	B4-54
126526	B4-54
126528	B4-54, B4-60
126531	B4-56
126533	B4-26
126534	B4-26
126535	B4-26
126536	B4-42
126537	B4-56, B4-60
126538	B4-60
126539	B4-60
126540	B4-60
126541	B4-60
126544	B4-72
126547	B4-14, B4-26
126548	B4-14
126601	B6-10
126602	B6-10
126603	B6-10
126604	B6-10
126605	B6-10, B6-14
126606	B6-10
126607	B6-10
126608	B6-10
126609	B6-10
126610	B6-10
126611	B6-26
126612	B6-26
126613	B6-26
126614	B6-26
126615	B6-26
126616	B6-26
126617	B6-26
126618	B6-26
126619	B6-34
126620	B6-34
126621	B6-34
126622	B6-34
126623	B6-34
126624	B6-34
126625	B6-34
126626	B6-34
126627	B6-34
126628	B6-34
126629	B2-43, B6-54
126630	B2-43, B6-54
126631	B2-43, B6-54
126632	B2-43, B6-54
126633	B2-43, B6-54
126634	B2-43, B6-54
126635	B2-43, B6-54
126636	B6-54
126637	B6-54
126638	B6-54
126639	B6-16, B6-18
126640	B6-18
126641	B6-30
126642	B6-36

PART NUMBER INDEX

DODGE®

Part Number	Page	Part Number	Page	Part Number	Page	Part Number	Page
126643	B6-36	126836	B4-28	127537	B2-59	127591	B2-52
126644	B6-58	126837	B4-28	127538	B2-59	127592	B2-52
126645	B6-58	126838	B4-28	127539	B2-68	127593	B2-65
126646	B6-28	126839	B4-28	127540	B2-68	127594	B2-65
126647	B6-28	126840	B4-28	127541	B2-68	127595	B2-65
126648	B6-28	126841	B4-28	127542	B2-68	127596	B2-65
126649	B6-28	126842	B4-28	127543	B2-68	127597	B2-65
126650	B6-28	126843	B4-28	127544	B2-68	127598	B2-65
126651	B6-28	126844	B4-28	127545	B2-46	127599	B2-65
126652	B6-28	126847	B4-18, B4-28	127546	B2-46	127600	B2-65
126653	B6-38	126855	B4-26	127547	B2-46	127601	B2-65
126654	B6-38	126856	B4-26	127548	B2-46	127602	B2-57
126655	B6-38	126857	B4-26	127549	B2-46	127603	B2-57
126656	B6-38	127073	B2-42	127550	B2-46	127604	B2-57
126657	B6-38	127500	B2-46	127551	B2-46	127605	B2-57
126658	B6-38	127501	B2-46	127552	B2-51	127606	B2-57
126659	B6-38	127502	B2-46	127553	B2-51	127607	B2-57
126660	B6-40	127503	B2-46	127554	B2-51	127608	B2-57
126661	B6-38	127504	B2-46	127555	B2-51	127609	B2-57
126685	B2-43, B6-54	127505	B2-46	127556	B2-64	127610	B2-57
126686	B2-43, B6-54	127506	B2-46	127557	B2-64	127611	B2-60
126687	B2-43, B6-54	127507	B2-46	127558	B2-64	127612	B2-60
126688	B2-43, B6-54	127508	B2-46	127559	B2-64	127613	B2-60
126689	B2-43, B6-54	127509	B2-51	127560	B2-64	127614	B2-60
126690	B2-43, B6-54	127510	B2-51	127561	B2-64	127615	B2-60
126691	B2-43, B6-54	127511	B2-51	127562	B2-64	127616	B2-60
126692	B2-43, B6-54	127512	B2-51	127563	B2-56	127617	B2-70
126693	B2-43, B6-54	127513	B2-51	127564	B2-56	127618	B2-70
126694	B2-43, B6-54	127514	B2-51	127565	B2-56	127619	B2-70
126695	B2-43, B6-54	127515	B2-64	127566	B2-56	127620	B2-70
126696	B2-43, B6-54	127516	B2-64	127567	B2-56	127621	B2-70
126697	B2-43, B6-54	127517	B2-64	127568	B2-56	127622	B2-70
126698	B2-43, B6-54	127518	B2-64	127569	B2-56	127623	B2-48
126699	B2-43, B6-54	127519	B2-64	127570	B2-59	127624	B2-48
126810	B4-24, B4-26	127520	B2-64	127574	B2-68	127625	B2-48
126811	B4-26	127521	B2-59, B2-64	127575	B2-68	127626	B2-48
126812	B4-24, B4-26	127522	B2-59, B2-64	127576	B2-68	127627	B2-48
126813	B4-24, B4-26	127523	B2-59, B2-64	127577	B2-68	127628	B2-48
126814	B4-24, B4-26	127524	B2-56	127578	B2-48	127629	B2-48
126815	B4-14, B4-24, B4-26	127525	B2-56	127579	B2-48	127630	B2-52
		127526	B2-56	127580	B2-48	127631	B2-52
126816	B4-24, B4-26	127527	B2-56	127581	B2-48	127632	B2-52
126817	B4-14, B4-24,B4-26	127528	B2-56	127582	B2-48	127633	B2-52
126818	B4-24, B4-26	127529	B2-56	127583	B2-48	127634	B2-65
126819	B4-14, B4-26	127530	B2-56	127584	B2-48	127635	B2-65
126820	B4-26	127531	B2-56	127585	B2-48	127636	B2-65
126821	B4-26	127532	B2-56	127586	B2-48	127637	B2-65
126822	B4-26	127533	B2-59	127587	B2-52	127638	B2-65
126823	B4-26	127534	B2-59	127588	B2-52	127639	B2-65
126824	B4-26	127535	B2-59	127589	B2-52	127640	B2-65
126835	B4-28	127536	B2-59	127590	B2-52	127641	B2-57

PART NUMBER INDEX

Part Number	Page
127642	B2-57
127643	B2-57
127644	B2-57
127645	B2-57
127646	B2-57
127647	B2-57
127648	B2-60
127649	B2-60
127650	B2-60
127651	B2-60
127652	B2-70
127653	B2-70
127654	B2-70
127655	B2-70
127670	B2-26
127671	B2-26
127672	B2-26
127673	B2-26
127674	B2-26
127675	B2-26
127676	B2-26
127677	B2-26
127678	B2-26
127679	B2-26
127680	B2-26
127681	B2-31
127682	B2-31
127683	B2-31
127684	B2-31
127685	B2-31
127686	B2-31
127687	B2-31
127688	B2-31
127689	B2-36
127690	B2-36
127691	B2-36
127692	B2-36
127693	B2-36
127694	B2-36
127695	B2-36
127696	B2-36
127697	B2-26
127698	B2-26
127699	B2-26
127700	B2-26
127701	B2-26
127702	B2-26
127703	B2-31
127704	B2-31
127705	B2-31
127706	B2-31
127707	B2-31
127708	B2-31
127709	B2-36
127710	B2-36
127711	B2-36
127712	B2-36
127713	B2-36
127714	B2-36
127715	B2-28
127716	B2-28
127717	B2-28
127718	B2-28
127719	B2-28
127720	B2-28
127721	B2-28
127722	B2-28
127723	B2-32
127724	B2-32
127725	B2-32
127726	B2-32
127727	B2-32
127728	B2-32
127729	B2-32
127730	B2-32
127731	B2-37
127732	B2-37
127733	B2-37
127734	B2-37
127735	B2-37
127736	B2-37
127737	B2-37
127738	B2-37
127739	B2-28
127740	B2-28
127741	B2-28
127742	B2-28
127743	B2-28
127744	B2-28
127745	B2-32
127746	B2-32
127747	B2-32
127748	B2-32
127749	B2-32
127750	B2-32
127751	B2-37
127752	B2-37
127753	B2-37
127754	B2-37
127755	B2-37
127756	B2-37
127804	B1-34
127808	B1-34
127818	B1-34
127819	B1-34
127820	B1-34
127821	B1-34
127822	B1-34
127823	B1-34
127824	B1-34
127825	B1-34
127826	B1-34
127861	B1-34
127862	B1-34
127863	B1-34
127864	B1-34
127865	B1-34
127866	B1-34
127867	B1-34
128082	B4-53
128083	B4-53
128084	B4-53
128085	B4-53
128086	B4-53
128087	B4-53
128088	B4-64
128089	B4-64
128090	B4-64
128091	B4-64
128092	B4-48
128093	B4-48
128094	B4-48
128095	B4-48
128096	B4-48
128097	B4-48
128106	B4-30
128107	B4-30
128108	B4-30
128109	B4-30
128110	B4-30
128111	B4-30
128130	B9-14
128131	B9-14
128132	B9-14
128133	B9-14
128134	B9-14
128135	B9-14
128136	B9-14
128137	B9-19
128138	B9-19
128139	B9-19
128140	B9-19
128141	B9-19
128142	B9-19
128143	B9-19
128144	B9-23
128145	B9-23
128146	B9-23
128147	B9-23
128148	B9-23
128149	B9-23
128150	B9-23
128151	B4-48
128154	B4-48
128170	B4-30
128171	B4-30
128172	B4-30
128173	B4-30
128174	B4-48
128175	B4-48
128176	B4-48
128177	B4-48
128178	B4-53
128179	B4-53
128180	B4-53
128181	B4-53
128182	B4-64
128183	B9-14
128184	B9-14
128185	B9-14
128186	B9-19
128187	B9-19
128188	B9-19
128189	B9-23
128190	B9-23
128191	B9-23
128192	B9-26
128193	B9-26
128194	B9-26
128195	B9-26
128196	B9-26
128197	B4-30
128200	B4-106, B5-74,B6-66, B7-48
128201	B4-108, B5-76, B6-68, B7-50
128202	B4-106, B5-74, B6-66, B7-48
128203	B4-108, B5-76, B6-68, B7-50
128204	B4-106, B5-74, B6-66, B7-48
128205	B4-108, B5-76, B6-68, B7-50

PART NUMBER INDEX

DODGE®

Part Number	Page
128206	B4-106, B5-74, B6-66, B7-48
128207	B4-108, B5-76, B6-68, B7-50
128208	B4-106, B5-74, B6-66, B7-48
128209	B4-108, B5-76, B6-68, B7-50
128210	B4-106, B5-74, B6-66, B7-48
128211	B4-108, B5-76, B6-68, B7-50
128212	B4-106, B5-74, B6-66, B7-48
128213	B4-108, B5-76, B6-68, B7-50
128214	B4-106, B5-74, B6-66, B7-48
128215	B4-108, B5-76, B6-68, B7-50
128216	B4-106, B5-74, B6-66, B7-48
128217	B4-108, B5-76, B6-68, B7-50
128218	B4-106, B5-74, B6-66, B7-48
128219	B4-108, B5-76, B6-68, B7-50
128220	B5-78, B6-70
128221	B5-78, B6-70
128222	B5-78, B6-70
128223	B5-78, B6-70
128277	B3-41, B4-103, B5-71, B6-63, B7-45
128278	B3-41, B4-103, B5-71, B6-63, B7-45
128280	B3-41, B4-103, B5-71, B6-63, B7-45
128281	B3-41, B4-103, B5-71, B6-63, B7-45
128282	B3-41, B4-103, B5-71, B6-63, B7-45
128283	B3-41, B4-103, B5-71, B6-63, B7-45
128284	B3-41, B4-103, B5-71, B6-63, B7-45
128285	B3-41, B4-103, B5-71, B6-63, B7-45
128286	B3-41, B4-103, B5-71, B6-63, B7-45
128350	B3-41, B4-103, B5-71, B6-63, B7-45
128351	B3-41, B4-103, B5-71, B6-63, B7-45
128352	B3-41, B4-103, B5-71, B6-63, B7-45
128353	B3-41, B4-103, B5-71, B6-63, B7-45
128354	B3-41, B4-103, B5-71, B6-63, B7-45
128355	B3-41, B4-103, B5-71, B6-63, B7-45
128356	B3-41, B4-103, B5-71, B6-63, B7-45
128357	B3-41, B4-103, B5-71, B6-63, B7-45
128358	B3-41, B4-103, B5-71, B6-63, B7-45
128363	B3-41, B4-103, B5-71, B6-63, B7-45
128364	B3-41, B4-103, B5-71, B6-63, B7-45
128365	B3-41, B4-103, B5-71, B6-63, B7-45
128366	B3-41, B4-103, B5-71, B6-63, B7-45
128367	B3-41, B4-103, B5-71, B6-63, B7-45
128368	B3-41, B4-103, B5-71, B6-63, B7-45
128369	B3-41, B4-103, B5-71, B6-63, B7-45
128380	B6-60
128381	B6-60
128382	B6-60
128383	B6-60
128384	B6-60
128385	B6-60
128386	B6-60
128387	B6-60
128388	B6-60
128389	B6-60
128390	B6-60
128391	B6-60
128432	B6-12
128435	B6-12
128436	B6-12
128437	B6-12
128438	B6-12
128440	B6-12
128441	B6-12
128443	B6-12
128444	B6-12
128446	B6-12
128449	B6-12
128451	B6-12
128452	B6-12
128474	B6-20
128475	B6-20
128476	B6-20
128477	B6-20
128478	B6-20
128479	B6-20
128480	B6-20
128481	B6-12, B6-20
128482	B6-20
128483	B6-12, B6-20
128484	B6-20
128485	B6-12, B6-20
128488	B6-20
128489	B6-20
128490	B6-20
128646	B2-43, B6-54
128647	B2-43, B6-54
128648	B2-43, B6-54
128649	B2-43, B6-54
128650	B2-43, B6-54
128651	B2-43, B6-54
128652	B2-43, B6-54, B6-58
128653	B2-43, B6-54
128654	B2-43, B6-54
128655	B2-43, B6-54
128656	B2-43, B6-54, B6-58
128657	B2-43, B6-54
128658	B2-43, B6-54
128659	B2-43, B6-54
128660	B2-43, B6-54
128661	B6-54, B6-58
128663	B6-54
128664	B6-54, B6-58
128665	B6-58
128666	B6-54
128667	B6-54
128668	B6-58
128669	B6-58
128670	B6-58
128671	B6-58
128672	B2-43, B6-58
128673	B6-58
128674	B6-58
128675	B6-58
128676	B6-58
128677	B6-54, B6-58
128684	B2-43, B6-54
128696	B6-18
128697	B6-18
128698	B6-18
128700	B6-10
128701	B6-10
128702	B6-10
128703	B6-10
128704	B6-10
128705	B6-10
128706	B6-10
128707	B6-10, B6-16, B6-18
128708	B6-10
128709	B6-10
128710	B6-10, B6-14
128711	B6-10, B6-18
128712	B6-10
128713	B6-10
128714	B6-10
128715	B6-10
128717	B6-10
128719	B6-10
128720	B6-10
128721	B6-14
128722	B6-14
128723	B6-14
128724	B6-14
128725	B6-14
128726	B6-14
128727	B6-14
128728	B6-14
128729	B6-14
128730	B6-14
128731	B6-14
128732	B6-14
128733	B6-14
128734	B6-14
128735	B6-14
128736	B6-14
128738	B6-14
128739	B6-14
128741	B6-14
128742	B6-22
128743	B6-22
128744	B6-22
128745	B6-22
128746	B6-22
128747	B6-22
128748	B6-22
128749	B6-22

PART NUMBER INDEX

Part Number	Page
128750	B6-22
128751	B6-22
128752	B6-22
128753	B6-22
128754	B6-22
128755	B6-22
128756	B6-22
128757	B6-26
128758	B6-26
128759	B6-26
128760	B6-26
128761	B6-26
128762	B6-26
128763	B6-26
128764	B6-26, B6-30
128765	B6-26
128766	B6-26
128767	B6-26
128768	B6-26
128769	B6-26
128770	B6-26
128771	B6-26
128772	B6-26
128774	B6-26
128775	B6-34
128776	B6-34
128777	B6-34
128778	B6-34
128779	B6-34
128780	B6-34
128781	B6-34
128782	B6-34, B6-36
128783	B6-34
128784	B6-34
128785	B6-34
128786	B6-34, B6-36
128787	B6-34
128788	B6-34
128789	B6-34
128790	B6-34
128792	B6-34
128794	B6-34
128795	B6-34
128796	B6-33
128797	B6-33
128798	B6-33
128799	B6-33
128800	B6-33
128801	B6-33
128802	B6-33
128803	B6-33
128804	B6-33
128805	B6-33
128806	B6-33
128807	B6-33
128808	B6-38
128809	B6-38
128810	B6-38, B6-40
128811	B6-38
128812	B6-38
128813	B6-38, B6-40
128814	B6-38, B6-40
128815	B6-38
128816	B6-38
128817	B6-38
128818	B6-38
128820	B6-38
128822	B6-38
128823	B6-18
128824	B6-16, B6-18
128825	B6-16, B6-18
128826	B6-18
128827	B6-18
128828	B6-18
128829	B6-16, B6-18
128830	B6-10, B6-16, B6-18
128831	B6-16, B6-18
128832	B6-10, B6-18
128833	B6-16, B6-18
128834	B6-10, B6-18
128835	B6-30
128836	B6-30
128837	B6-30
128838	B6-30
128839	B6-30
128840	B6-30
128841	B6-30
128842	B6-26, B6-30
128843	B6-36
128844	B6-36
128845	B6-36
128846	B6-36
128847	B6-36
128848	B6-36
128849	B6-36
128850	B6-34, B6-36
128851	B6-36
128852	B6-34, B6-36
128853	B6-36
128854	B6-34, B6-36
128855	B6-40
128856	B6-40
128857	B6-40
128858	B6-40
128859	B6-40
128860	B6-40
128861	B6-40
128862	B6-38, B6-40
128863	B6-40
128864	B6-38, B6-40
128865	B6-40
128866	B6-38, B6-40
128960	B1-35, B2-77
128961	B1-35, B2-77
128962	B1-35, B2-77
128963	B1-35, B2-77
128964	B1-35, B2-77
128965	B1-35, B2-77
128966	B1-35, B2-77
128974	B1-35, B2-77
128975	B1-35, B2-77
128976	B1-35, B2-77
128977	B1-35, B2-77
128978	B1-35, B2-77
128980	B1-35, B2-77
128989	B1-35, B2-77
128990	B1-35, B2-77
128991	B1-35, B2-77
128992	B1-35, B2-77
128993	B1-35, B2-77
128994	B1-35, B2-77
128996	B1-35, B2-77
128997	B1-35, B2-77
128998	B4-32
129040	B5-16
129041	B5-16
129042	B5-16
129043	B5-16
129044	B5-16
129045	B5-16
129046	B5-16
129047	B5-16
129048	B5-20
129049	B5-20, B7-20
129078	B5-26, B5-30
129148	B5-24
129149	B5-10
129150	B5-8, B5-16
129151	B5-8, B5-16
129152	B5-8
129153	B5-8
129154	B5-8
129155	B5-8
129156	B5-8
129157	B5-8
129158	B5-8
129159	B5-8
129160	B5-8
129161	B5-8, B5-20,B7-20
129162	B5-8
129163	B5-8
129164	B5-10
129165	B5-10
129166	B5-10
129167	B5-10
129168	B5-10
129169	B5-10
129170	B5-10
129171	B5-10
129172	B5-10
129173	B5-10
129174	B5-12
129175	B5-12
129176	B5-12
129177	B5-12
129178	B5-12
129179	B5-14
129180	B5-14
129181	B5-14
129182	B5-14
129183	B5-16
129184	B5-16
129185	B5-16
129186	B5-16
129187	B5-16
129188	B5-16
129189	B5-16
129190	B5-16
129191	B5-16
129192	B5-16
129193	B5-16
129194	B5-16
129195	B5-16
129196	B5-16
129197	B5-16
129198	B5-16
129199	B5-16
129200	B5-16
129201	B5-16
129202	B5-16
129203	B5-8, B5-16
129204	B5-8
129205	B5-8
129206	B5-8

PART NUMBER INDEX

DODGE®

Part Number	Page	Part Number	Page	Part Number	Page	Part Number	Page
129207	B5-8	129258	B2-44	129309	B5-26	129361	B2-30
129208	B5-8	129259	B2-44	129310	B5-26, B5-30	129362	B2-30
129209	B5-8	129260	B2-24	129311	B5-26	129363	B2-30
129210	B5-16	129261	B2-24	129312	B5-26	129364	B2-30
129211	B5-10	129262	B2-24	129313	B5-26	129365	B2-30
129212	B5-10	129263	B2-24	129314	B5-26, B5-30	129366	B2-30
129213	B5-10	129264	B2-24	129315	B5-26	129367	B2-30
129214	B5-10	129265	B2-24	129316	B5-26	129368	B2-30
129215	B5-10	129266	B2-24	129317	B5-26	129369	B5-30
129216	B5-10	129267	B2-24	129318	B5-26	129371	B5-10
129217	B5-20	129268	B2-24	129319	B5-26	129372	B5-16
129218	B5-20, B7-20	129269	B2-24	129320	B5-28	129373	B5-26
129219	B5-20, B7-20	129270	B2-24	129321	B5-26	129374	B5-36
129220	B5-20	129271	B2-24	129322	B5-26	129375	B5-46
129221	B5-20, B7-20	129272	B2-24	129323	B5-26	129376	B5-10
129222	B5-20, B7-20	129273	B2-24	129324	B5-26	129377	B5-16
129223	B5-20, B7-20	129274	B2-24	129325	B5-26	129378	B5-26
129224	B5-10, B5-20, B7-20	129275	B2-24	129326	B5-26	129379	B5-36
129225	B5-20, B7-20	129276	B5-24	129327	B5-26	129380	B5-46
129226	B5-10, B5-20	129277	B5-24	129328	B5-26	129381	B5-20
129227	B5-20, B7-20	129278	B5-24	129329	B5-26	129382	B5-22
129228	B5-10, B5-20	129279	B5-24	129330	B5-30	129383	B5-20
129229	B5-20	129280	B5-24	129331	B5-30	129384	B5-22
129230	B5-20	129281	B5-24	129332	B5-30	129385	B5-20
129231	B5-20	129282	B5-24	129333	B5-30	129386	B5-22
129232	B5-20	129283	B5-24	129334	B5-30	129387	B5-20
129233	B5-20	129284	B5-24	129335	B5-30	129388	B5-22
129234	B5-22	129285	B5-24	129336	B5-30	129392	B2-44
129235	B5-22	129286	B5-24	129337	B5-26, B5-30	129393	B2-44
129236	B5-22	129287	B5-24	129339	B2-54	129394	B2-54
129237	B5-22	129288	B5-24	129340	B2-54	129395	B2-62
129238	B5-22	129289	B5-24	129341	B2-54	129396	B2-44
129239	B5-22	129290	B5-24	129342	B2-54	129399	B5-12
129240	B5-22	129291	B2-50	129343	B2-54	129417	B5-66
129241	B5-22	129292	B2-50	129344	B2-54	129419	B5-8, B5-20
129242	B5-22	129293	B2-50	129345	B2-54	129420	B5-8, B5-16
129243	B5-22	129294	B2-50	129346	B2-54	129421	B5-8
129244	B2-44	129295	B2-50	129347	B2-54	129422	B5-8, B5-20
129245	B2-44	129296	B2-50	129348	B2-54	129423	B5-8
129246	B2-44	129297	B2-50	129349	B2-54	129424	B5-8, B5-20
129247	B2-44	129298	B2-50	129350	B2-54	129425	B5-10, B5-20
129248	B2-44	129299	B2-50	129351	B2-54	129426	B5-10, B5-20
129249	B2-44	129300	B2-50	129352	B2-54	129427	B5-10, B5-20
129250	B2-44	129301	B5-26	129353	B2-54	129428	B5-10, B5-20
129251	B2-44	129302	B5-26	129354	B2-54	129429	B5-10, B5-20
129252	B2-44	129303	B5-26	129355	B2-30	129430	B5-10, B5-20
129253	B2-44	129304	B5-26	129356	B2-30	129431	B5-10, B5-20
129254	B2-44	129305	B5-26	129357	B2-30	129432	B5-8
129255	B2-44	129306	B5-26	129358	B2-30	129433	B5-16
129256	B2-44	129307	B5-26	129359	B2-30	129434	B5-16
129257	B2-44	129308	B5-26	129360	B2-30	129435	B5-16

PART NUMBER INDEX

DODGE®

Part Number	Page
129436	B5-16
129437	B5-16
129438	B5-16
129439	B5-16
129440	B5-16
129441	B5-16
129442	B5-12
129443	B5-12, B5-22
129444	B5-12, B5-22
129445	B5-14, B5-22
129446	B5-14, B5-22
129447	B5-14, B5-22
129448	B5-14, B5-22
129449	B5-14, B5-22
129450	B5-14, B5-22
129451	B5-22
129452	B5-12, B5-22
129453	B5-20
129454	B5-20
129455	B5-22
129456	B5-22
129457	B5-24
129458	B5-24
129459	B5-24
129460	B5-24
129461	B5-24
129462	B5-24
129463	B5-24
129464	B5-35
129465	B5-35
129466	B5-35, B5-42
129467	B5-35, B5-42
129468	B5-35, B5-42
129469	B5-36, B5-42
129470	B5-36, B5-42
129471	B5-36, B5-42
129472	B5-36, B5-42
129473	B5-36, B5-42
129474	B5-36, B5-42
129475	B5-36, B5-42
129476	B5-38, B5-44
129477	B5-38, B5-44
129478	B5-38, B5-44
129479	B5-40, B5-44
129480	B5-40, B5-44
129481	B5-40, B5-44
129482	B5-40, B5-44
129483	B5-40, B5-44
129484	B5-40, B5-44
129485	B5-40, B5-44
129486	B5-42
129487	B5-42
129488	B5-44
129489	B5-44
129490	B5-26
129491	B5-26
129492	B5-26, B5-30
129493	B5-26, B5-30
129494	B5-26, B5-30
129495	B5-26, B5-30
129496	B5-26, B5-30
129497	B5-26, B5-30
129498	B5-26, B5-30
129499	B5-28
129500	B5-28
129501	B5-46, B5-48
129502	B5-46, B5-48
129503	B5-46, B5-48
129504	B5-46, B5-48
129505	B5-46, B5-48
129506	B5-46, B5-48
129507	B5-46, B5-48
129508	B5-46, B5-48
129509	B5-48
129510	B5-48
129511	B5-33
129512	B5-33
129513	B5-33
129514	B5-33
129515	B5-33
129516	B5-62
129517	B5-62
129518	B5-62, B5-66
129519	B5-62, B5-66
129520	B5-62, B5-66
129521	B5-64, B5-66
129522	B5-64, B5-66
129523	B5-64, B5-66
129524	B5-64, B5-66
129525	B5-64, B5-66
129526	B5-64, B5-66
129527	B5-64, B5-66
129528	B5-66
129529	B5-66
129530	B2-44
129531	B2-44
129532	B2-44
129533	B2-44
129534	B2-44
129535	B2-44
129536	B2-44
129537	B2-50
129538	B2-50
129539	B2-50
129540	B2-50
129541	B2-62
129542	B2-62
129543	B2-62
129544	B2-62
129545	B2-62
129546	B2-62
129547	B2-62
129548	B2-54
129549	B2-54
129550	B2-54
129551	B2-54
129552	B2-54
129553	B2-54
129554	B2-54
129555	B2-58
129556	B2-58
129557	B2-58
129558	B2-58
129559	B2-24
129560	B2-24
129561	B2-24
129562	B2-24
129563	B2-24
129564	B2-24
129565	B2-24
129566	B2-24
129567	B2-35
129568	B2-35
129569	B2-35
129570	B2-35
129571	B2-35
129572	B2-35
129573	B2-30
129574	B2-30
129575	B2-30
129576	B2-30
129577	B2-30
129578	B2-30
129579	B2-40
129580	B2-40
129581	B2-40
129582	B2-40
129583	B2-40
129584	B2-40
129585	B2-40
129602	B2-24, B2-44
129603	B2-44
129605	B2-24
129606	B2-24, B2-44
129611	B2-44
129612	B2-24
129613	B2-24, B2-44
129615	B5-33
129616	B5-33
129617	B5-33
129618	B5-33
129619	B5-33
129620	B5-33
129621	B5-33
129622	B5-33
129623	B5-33
129624	B5-33
129625	B5-33
129626	B5-33
129627	B2-58
129629	B2-58
129631	B2-58
129632	B2-58
129634	B2-58
129635	B2-58
129637	B5-35
129638	B5-35
129639	B5-35
129640	B5-35
129641	B5-35
129642	B5-35
129643	B5-35
129644	B5-35
129645	B5-35
129646	B5-35, B5-42
129647	B5-35
129648	B5-35
129649	B5-36
129650	B5-36
129651	B5-36
129652	B5-36
129653	B5-36
129654	B5-36
129655	B5-36
129656	B5-36
129657	B5-36
129658	B5-36
129659	B5-38
129660	B5-38
129661	B5-38
129662	B5-40
129663	B5-40
129664	B5-40
129665	B5-40

PART NUMBER INDEX

DODGE®

Part Number	Page
129666	B5-40
129667	B5-35
129668	B5-35
129669	B5-35
129670	B5-35
129671	B5-35
129672	B5-36
129673	B5-36
129674	B5-36
129675	B5-36
129676	B5-36
129677	B5-36
129678	B5-36
129679	B5-42
129680	B5-42
129681	B5-42
129682	B5-42
129683	B5-42
129684	B5-42
129685	B5-42
129686	B5-42
129687	B5-36, B5-42
129688	B5-42
129689	B5-36, B5-42
129690	B5-42
129691	B5-36, B5-42
129692	B5-42
129693	B5-42
129694	B5-42
129695	B5-42
129696	B5-42
129697	B5-44
129698	B5-44
129699	B5-44
129700	B5-44
129701	B5-44
129702	B5-44
129703	B5-44
129704	B5-44
129705	B2-62
129706	B2-62
129707	B2-62
129708	B2-62
129709	B2-62
129710	B2-62
129711	B2-62
129712	B2-62
129713	B2-62
129714	B2-62
129715	B2-62
129716	B2-62
129717	B2-62
129718	B2-62
129719	B2-62
129720	B2-62
129721	B2-35
129722	B2-35
129723	B2-35
129724	B2-35
129725	B2-35
129726	B2-35
129727	B2-35
129728	B2-35
129729	B2-35
129730	B2-35
129731	B2-35
129732	B2-35
129733	B2-35
129734	B2-35
129735	B5-46
129736	B5-46
129737	B5-46
129738	B5-46, B5-48
129739	B5-46
129740	B5-46
129741	B5-46, B5-48
129742	B5-46, B5-48
129743	B5-46
129744	B5-46
129745	B5-46
129746	B5-46
129747	B5-46
129748	B5-46
129749	B5-46
129750	B5-46
129751	B5-46
129752	B5-46
129753	B5-46
129754	B5-46
129755	B5-46
129756	B5-46
129757	B5-46
129758	B5-48
129759	B5-48
129760	B5-48
129761	B5-48
129762	B5-48
129763	B5-48
129764	B5-48
129765	B5-46, B5-48
129766	B5-48
129767	B5-46, B5-48
129768	B5-48
129769	B5-46, B5-48
129770	B5-48
129771	B5-48
129772	B5-48
129773	B5-48
129774	B5-62
129775	B5-62
129776	B5-62
129777	B5-62
129778	B5-62
129779	B5-62
129780	B5-62
129781	B5-62
129782	B5-62
129783	B5-62, B5-66
129784	B5-62
129785	B5-62
129786	B5-64
129787	B5-64, B5-66
129788	B5-64
129789	B5-64
129790	B5-64
129791	B5-64
129792	B5-64
129793	B5-64
129794	B5-64
129795	B5-64
129796	B5-62
129797	B5-62
129798	B5-62
129799	B5-62
129800	B5-62
129801	B5-64
129802	B5-64
129803	B5-64
129804	B5-64
129805	B5-64
129806	B5-64
129807	B5-64
129808	B5-66
129809	B5-66
129810	B5-66
129811	B5-66
129812	B5-66
129813	B5-66
129814	B5-66
129815	B5-64, B5-66
129816	B5-66
129817	B5-64, B5-66
129818	B5-66
129819	B5-64, B5-66
129820	B5-66
129821	B5-66
129822	B5-66
129823	B5-66
129824	B5-66
129825	B2-40
129826	B2-40
129827	B2-40
129828	B2-40
129829	B2-40
129830	B2-40
129831	B2-40
129832	B2-40
129833	B2-40
129834	B2-40
129835	B2-40
129836	B2-40
129837	B2-40
129838	B2-40
129839	B2-40
129840	B2-40
129841	B5-8
129842	B5-8
129843	B5-8
129844	B5-64
129845	B5-64
129889	B5-66
129890	B5-66
129891	B5-66
129892	B5-66
129893	B5-66
129894	B5-66
129895	B5-66
129896	B5-66
129897	B5-66
129898	B5-66
129899	B5-66
129967	B2-24, B2-30, B2-35, B2-40, B2-44, B2-50, B2-54, B2-58, B2-62, B2-66
129968	B2-24, B2-30, B2-35, B2-40, B2-44, B2-50, B2-54, B2-58, B2-62, B2-66
129969	B2-24, B2-30, B2-35, B2-40, B2-44, B2-50, B2-54, B2-58, B2-62, B2-66

PART NUMBER INDEX

Part Number	Page
129970	B2-24, B2-30, B2-35, B2-40, B2-50, B2-54, B2-58, B2-62, B2-66
129971	B2-24, B2-30, B2-35, B2-40, B2-50, B2-54, B2-58, B2-62, B2-66
129972	B2-24, B2-30, B2-35, B2-40, B2-44, B2-50, B2-54, B2-58, B2-62, B2-66
129973	B2-24, B2-30, B2-35, B2-40, B2-44, B2-50, B2-54, B2-58, B2-62, B2-66
129974	B2-24, B2-30, B2-35, B2-40, B2-44, B2-50, B2-54, B2-58, B2-62, B2-66
129975	B2-24, B2-30, B2-35, B2-40, B2-54, B2-62
129976	B2-40, B2-44, B2-54, B2-62
129977	B2-40, B2-44, B2-54, B2-62
129978	B2-24, B2-30, B2-35, B2-40, B2-44, B2-54, B2-62
129979	B2-24, B2-30, B2-35, B2-40, B2-44, B2-54, B2-62
129980	B2-24, B2-30, B2-35, B2-40, B2-44, B2-50, B2-54, B2-62, B2-66
129981	B2-24, B2-30, B2-35, B2-40, B2-44, B2-50, B2-54, B2-62, B2-66
129982	B2-24, B2-30, B2-35, B2-40, B2-50, B2-54, B2-62, B2-66
129983	B2-24, B2-30,B2-35, B2-40, B2-44, B2-50, B2-54, B2-62, B2-66
129984	B2-24, B2-30,B2-35, B2-40, B2-54, B2-62
129985	B2-40, B2-44, B2-54, B2-62
129986	B2-24, B2-30,B2-35, B2-40, B2-44, B2-54, B2-62
129988	B2-50
129989	B2-50
129990	B2-50
129991	B2-50
130044	B18-27
130045	B18-27
130047	B18-27
130049	B18-27
130050	B18-27
130051	B18-27
130054	B18-27
130056	B18-27
130057	B18-27
130058	B18-27
130059	B18-27
130060	B18-27
130062	B18-27
130063	B18-27
130064	B18-27
130065	B18-27
130066	B18-27
130067	B18-27
130068	B18-27
130069	B18-27
130070	B18-27
130071	B18-27
130073	B18-27
130078	B18-27
130276	B9-6
130300	B9-34
130301	B9-34
130302	B9-34
130303	B9-34
130305	B9-34
130306	B9-34
130307	B9-34
130308	B9-34
130310	B9-6, B9-10
130311	B9-6, B9-10
130312	B9-8
130313	B9-8
130314	B9-8
130315	B9-8
130316	B9-8
130317	B9-8
130318	B9-10
130319	B9-10
130320	B9-10
130321	B9-10
130322	B9-10
130323	B9-10
130324	B9-6
130325	B9-6
130326	B9-16
130327	B9-16
130328	B9-16
130329	B9-16
130330	B9-16
130331	B9-16
130332	B9-24
130333	B9-24
130334	B9-24
130335	B9-24
130336	B9-24
130337	B9-24
130338	B9-24
130339	B9-24
130340	B9-30
130341	B9-30
130342	B9-30
130343	B9-30
130344	B9-30
130345	B9-30
130346	B9-32
130347	B9-32
130348	B9-32
130349	B9-32
130350	B9-32
130351	B9-32
130352	B9-16
130353	B9-16
130354	B4-32
130355	B4-32
130356	B4-32
130357	B4-32
130358	B4-32
130359	B4-32
130360	B4-32
130361	B4-32
130362	B4-46
130363	B4-46
130364	B4-46
130365	B4-46
130366	B4-46
130367	B4-40
130368	B4-40
130369	B4-40
130370	B4-40
130371	B4-40
130372	B4-40
130373	B4-40
130689	B5-18
130691	B5-18
130692	B5-18
130693	B5-18
130694	B5-18
130695	B5-18
130696	B5-18
130697	B5-18
130698	B5-18
130699	B5-18
130700	B5-18
130701	B5-18
130702	B5-18
130769	B9-12
130770	B9-12
130771	B9-12
130772	B9-12
130773	B9-12
130774	B9-12
130775	B9-12
130776	B9-18
130777	B9-18
130778	B9-18
130779	B9-18
130780	B9-18
130781	B9-20
130782	B9-20
130783	B9-20
130784	B9-20
130785	B9-20
130786	B9-20
130787	B9-20
130788	B9-28
130789	B9-28
130790	B9-28
130791	B9-28
130792	B9-28
130793	B9-32
130794	B9-32
130795	B9-32
130796	B9-32
130797	B9-32
130798	B9-32
130799	B9-32
130831	B7-26
130832	B7-26
130833	B7-26
130834	B7-26
130835	B7-26
130836	B7-26
130837	B7-26
130838	B7-30
130839	B7-30
130840	B7-30

PART NUMBER INDEX

DODGE®

Part Number	Page	Part Number	Page	Part Number	Page	Part Number	Page
130841	B7-30	131116	B7-28	131213	B7-34	131366	B7-39
130842	B7-30	131117	B7-28	131214	B7-34	131377	B9-24
130843	B7-30	131120	B7-28	131215	B7-34	131378	B9-24
130845	B7-34	131121	B7-28	131216	B7-34	131379	B9-24
130846	B7-34	131122	B7-28	131217	B7-34	131380	B9-24
130847	B7-34	131125	B7-28	131220	B7-34	131381	B9-24
130848	B7-34	131127	B7-28	131221	B7-34	131382	B9-24
130849	B7-34	131130	B7-28	131222	B7-34	131383	B9-24
130850	B7-34	131132	B7-28	131225	B7-34	131384	B9-24
130851	B7-34	131135	B7-28	131227	B7-34	131385	B9-24
130852	B7-34	131137	B7-28	131230	B7-34	131386	B9-24
130853	B7-34	131154	B7-32	131232	B7-34	131387	B9-24
130854	B7-34	131156	B7-32	131235	B7-34	131388	B9-24
130880	B7-24	131157	B7-32	131238	B9-32	131389	B9-24
131050	B7-24	131158	B7-32	131239	B9-32	131432	B7-14
131052	B7-24	131159	B7-32	131240	B9-32	131433	B7-14
131054	B7-24	131160	B7-32	131241	B9-32	131434	B7-18
131056	B7-24	131161	B7-32	131243	B9-32	131435	B9-34
131057	B7-24	131163	B7-32	131244	B9-32	131436	B9-34
131058	B7-24	131164	B7-32	131245	B9-32	131437	B9-34
131059	B7-24	131165	B7-32	131246	B9-32	131438	B9-34
131060	B7-24	131166	B7-32	131248	B9-32	131439	B9-34
131061	B7-24	131167	B7-32	131249	B9-32	131440	B9-34
131063	B7-24	131170	B7-32	131250	B9-32	131441	B9-34
131064	B7-24	131171	B7-32	131259	B7-37	131442	B9-34
131065	B7-24	131172	B7-32	131260	B7-37	131443	B9-34
131066	B7-24	131175	B7-32	131261	B7-37	131444	B9-34
131067	B7-24	131177	B7-32	131263	B7-37	131445	B9-34
131070	B7-24	131180	B7-32	131264	B7-37	131446	B9-34
131071	B7-24	131182	B7-32	131265	B7-37	131447	B9-34
131072	B7-24	131185	B7-32	131266	B7-37	131536	B7-36
131074	B7-24	131186	B9-30	131275	B7-37	131537	B7-36
131075	B7-24	131187	B9-30	131276	B7-37	131540	B7-36
131077	B7-24	131188	B9-30	131317	B7-38	131542	B7-36
131079	B7-24	131189	B9-30	131325	B7-38	131545	B7-36
131082	B9-6	131190	B9-30	131327	B7-38	131589	B9-6
131083	B9-6	131191	B9-30	131335	B7-38	131737	B9-16
131084	B9-6	131192	B9-30	131339	B7-14	131738	B9-16
131085	B9-6	131193	B9-30	131340	B7-18	131739	B9-16
131100	B7-28	131194	B9-30	131341	B7-12	131740	B9-16
131102	B7-28	131195	B9-30	131342	B7-12	131741	B9-16
131104	B7-28	131196	B9-30	131343	B7-28	131742	B9-16
131106	B7-28	131197	B9-30	131356	B7-39	131743	B9-16
131107	B7-28	131198	B9-30	131357	B7-39	131744	B9-16
131108	B7-28	131204	B7-34	131358	B7-39	131745	B9-16
131109	B7-28	131206	B7-34	131359	B7-39	131746	B9-16
131110	B7-28	131207	B7-34	131360	B7-39	131747	B9-16
131111	B7-28	131208	B7-34	131361	B7-39	131748	B9-16
131113	B7-28	131209	B7-34	131363	B7-39	131749	B9-16
131114	B7-28	131210	B7-34	131364	B7-39	131800	B7-12, B7-16
131115	B7-28	131211	B7-34	131365	B7-39	131801	B7-12, B7-16

PART NUMBER INDEX

Part Number	Page
131802	B7-12
131803	B7-12
131804	B7-12
131805	B7-12
131806	B7-12
131807	B7-12
131808	B7-12
131809	B7-12
131810	B7-12
131811	B7-12
131812	B7-12
131813	B7-14
131814	B7-14
131815	B7-14
131816	B7-14
131817	B7-14
131818	B7-14
131819	B7-14
131820	B7-14
131821	B7-14
131830	B7-16
131831	B7-16
131832	B7-16
131833	B7-16
131834	B7-16
131835	B7-16
131836	B7-16
131837	B7-16
131838	B7-16
131839	B7-16
131840	B7-16
131841	B7-18
131842	B7-18
131843	B7-18
131844	B7-18
131845	B7-18
131846	B7-18
131847	B7-18
131848	B7-18
131849	B7-18
131895	B7-12
131896	B7-12
131897	B7-12
131900	B7-40
131902	B7-40
131904	B7-40
131906	B7-40
131907	B7-40
131908	B7-40
131909	B7-40
131910	B7-40
131911	B7-40
131912	B7-40
131913	B7-40
131914	B7-40
131915	B7-40
131916	B7-40
131918	B7-40
131919	B7-40
131920	B7-40
131923	B7-40
131924	B7-40
131927	B7-40
131928	B7-40
131931	B7-40
131933	B7-40
131934	B7-40
131970	B9-6
131971	B9-6
131972	B9-6
131973	B9-6
131974	B9-6
131975	B9-6
131976	B9-6
131977	B9-6
131978	B9-6
131979	B9-6
131980	B9-6
131981	B9-6
131982	B9-8
131983	B9-10
131984	B9-10
131985	B9-10
131986	B9-10
131987	B9-10
131988	B9-10
131989	B9-10
131990	B9-10
131991	B9-10
131992	B9-10
131993	B9-10
131994	B9-10
131995	B9-10
131996	B9-6
132151	B18-18
132152	B18-18
132153	B18-18
132154	B18-18
132155	B18-18
132156	B18-18
132157	B18-18
132158	B18-18
132159	B18-18
132160	B18-18
132161	B18-18
132192	B18-13, B18-25
132193	B18-13, B18-25
132198	B18-13, B18-25
132203	B18-19, B18-30
132205	B18-19, B18-30
132218	B18-18
132219	B18-18
132220	B18-18
132221	B18-18
132222	B18-18
132223	B18-18
132224	B18-18
132225	B18-18
132226	B18-18
132227	B18-18
132228	B18-18
132383	B18-18
132384	B18-18, B18-26
132385	B18-18
132386	B18-18
132387	B18-18
132388	B18-18
132389	B18-18
132420	B18-19
132421	B18-19
132422	B18-19
132423	B18-19
132424	B18-19
132425	B18-19
132426	B18-19
132427	B18-19
132428	B18-19
132429	B18-19
132430	B18-19
132474	B18-18
132475	B18-18
132476	B18-18
132477	B18-18
132538	B18-17
132539	B18-17
132542	B18-18, B18-22
132546	B18-13, B18-18, B18-22
132547	B18-13, B18-18, B18-22
132548	B18-13, B18-18, B18-22
132549	B18-13, B18-18, B18-22
132559	B18-17
132564	B18-15, B18-17, B18-18, B18-22
132565	B18-15, B18-17, B18-18, B18-22
132566	B18-15, B18-17, B18-18, B18-22
132567	B18-15, B18-22
132591	B18-17
132594	B18-17
132597	B18-17
132766	B18-15
132767	B18-15
132768	B18-15
132811	B18-18, B18-23
132814	B18-15, B18-17, B18-18, B18-23
132816	B18-15, B18-17, B18-18, B18-23
132819	B18-15, B18-17, B18-18, B18-23
132822	B18-15, B18-23
132834	B18-11, B18-26
132924	B18-15
132925	B18-15
132926	B18-15
132950	B18-10
132951	B18-10
132952	B18-12
132953	B18-12
132954	B18-12
132955	B18-12
132956	B18-12
132957	B18-12
132958	B18-12
132959	B18-10
132983	B18-10
132984	B18-10
132985	B18-10
132986	B18-10
132987	B18-10
132988	B18-10
132989	B18-10
132990	B18-10
132991	B18-10
132992	B18-10
133116	B18-11, B18-26
133203	B18-10
133245	B18-10

PART NUMBER INDEX

DODGE®

Part Number	Page
133250	B18-10
133255	B18-10
133260	B18-10
133265	B18-10
133270	B18-10
133275	B18-10
133280	B18-10
133285	B18-12
133292	B18-12
133293	B18-12
133294	B18-12
133295	B18-12
133296	B18-12
133297	B18-12
133303	B18-17
133304	B18-17
133305	B18-17
133344	B18-10, B18-25
133392	B18-15
133550	B18-15
133565	B18-17
133566	B18-17
133583	B18-10
133584	B18-10
133585	B18-10
133586	B18-10
133590	B18-12
133591	B18-12
133592	B18-12
133593	B18-12
133594	B18-12
133595	B18-12
133596	B18-12
133669	B18-15
133932	B18-13, B18-18, B18-23
133933	B18-13, B18-18, B18-23
133937	B18-13, B18-18, B18-23
133938	B18-13, B18-18, B18-23
133959	B18-15
133960	B18-15
133961	B18-15
133980	B18-10
133981	B18-10
133982	B18-10
133983	B18-10
133984	B18-10
133985	B18-10
133986	B18-10
133987	B18-10
133988	B18-13
133989	B18-13
133990	B18-13
133991	B18-13
133992	B18-13
133993	B18-13
133994	B18-13
133995	B18-15, B18-17
133996	B18-15, B18-17
133997	B18-15, B18-17
134186	B6-24
134187	B6-24
134188	B6-24
134189	B6-24
134190	B6-24
134191	B6-24
134192	B6-24
134193	B6-24
134194	B6-24
134195	B6-24
134196	B6-24
134197	B6-24
134200	B18-12
134201	B18-12
134202	B18-12
134203	B18-12
134204	B18-12
134205	B18-12
134206	B18-12
134207	B18-12
134208	B18-12
134209	B18-12
134210	B18-12
134211	B18-12
134212	B18-12
134213	B18-12
134516	B18-21
134517	B18-21
134518	B18-21
134519	B18-21
134520	B18-21
134521	B18-21
134716	B18-21
134717	B18-21
134718	B18-21
134719	B18-21
134720	B18-21
134721	B18-21
134779	B18-21
134796	B18-28
134798	B18-28
134800	B18-28
134803	B18-28
134806	B18-28
134809	B18-28
134869	B18-21
134870	B18-21
134871	B18-21
134872	B18-21
134873	B18-21
134874	B18-21
134875	B18-21
134876	B18-21
134877	B18-21
134886	B18-21
134887	B18-21
134888	B18-21
134889	B18-21
134890	B18-21
134891	B18-21
135081	B4-73
135102	B4-73
135105	B4-73
135106	B4-73
135107	B4-73
135109	B4-73
135111	B4-73
135116	B4-78
135117	B4-78
135118	B4-78
135120	B4-78
135121	B4-78
135123	B4-80
135125	B4-80
135127	B4-80
135129	B4-80
135130	B4-80
135135	B18-27
135136	B18-27
135137	B18-27
135138	B18-27
135170	B4-73
135171	B4-72, B4-73
135172	B4-72, B4-73
135181	B4-80
135182	B4-78
135183	B4-76, B4-80
135184	B4-76, B4-80
135185	B4-76, B4-80
135290	B18-27
135291	B18-27
135292	B18-27
135293	B18-27
135294	B18-27
135295	B18-27
135296	B18-27
135297	B18-27
135298	B18-27
135299	B18-27
135700	B18-27
135704	B18-27
135708	B18-27
135712	B18-27
135716	B18-27
135720	B18-27
135724	B18-27
135728	B18-27
135732	B18-27
135736	B18-27
136070	B4-83
136071	B4-83
136072	B4-83
136073	B4-83
136074	B4-83
136075	B4-83
136076	B4-83
136080	B4-83
136081	B4-82, B4-83
136082	B4-82, B4-83
136083	B4-82, B4-83
136084	B4-83
136085	B4-83
136110	B5-50
136111	B5-50
136112	B5-50
136113	B5-50
136114	B5-50
136115	B5-50
136116	B5-50
136117	B5-50, B5-52
136118	B5-50
136119	B5-50
136120	B5-50
136122	B5-50
136123	B5-50
136124	B5-50
136125	B5-50
136126	B5-50
136127	B5-50
136128	B5-50
136129	B5-50

PART NUMBER INDEX

Part Number	Page
136130	B5-54
136131	B5-54
136132	B5-54
136133	B5-54
136134	B5-54
136135	B5-54
136136	B5-54
136137	B5-54, B5-58
136138	B5-54
136139	B5-54
136140	B5-54
136141	B5-54
136142	B5-56
136143	B5-56
136144	B5-56
136145	B5-56
136146	B5-56
136147	B5-56
136148	B5-56
136149	B5-56
136150	B5-56
136151	B5-56
136152	B5-60
136153	B5-60
136154	B5-60
136155	B5-60
136156	B5-60
136157	B5-60
136158	B5-60
136159	B5-52
136160	B5-52
136161	B5-52
136162	B5-52
136163	B5-52
136164	B5-52
136165	B5-52
136166	B5-52
136167	B5-50, B5-52
136168	B5-52
136169	B5-50, B5-52
136170	B5-58
136171	B5-58
136172	B5-58
136173	B5-58
136174	B5-58
136175	B5-58
136176	B5-58
136177	B5-58
136178	B5-56, B5-58
136179	B5-58
136180	B5-56, B5-58
136181	B5-58
136182	B5-56, B5-58
136183	B5-58
136184	B5-58
136185	B5-58
136186	B5-61
136187	B5-61
136188	B5-61
136189	B5-60, B5-61
136190	B5-61
136191	B5-60, B5-61
136192	B5-61
136193	B5-60, B5-61
136194	B5-61
136195	B5-61
136196	B5-61
136197	B5-61
136198	B5-61
136210	B5-50
136211	B5-50, B5-52
136212	B5-50, B5-52
136213	B5-50, B5-52
136214	B5-50, B5-52
136215	B5-50, B5-52
136216	B5-50, B5-52
136217	B5-50, B5-52
136218	B5-50, B5-52
136219	B5-54
136220	B5-54, B5-58
136221	B5-54, B5-58
136222	B5-54, B5-58
136223	B5-54, B5-58
136224	B5-56, B5-58
136225	B5-56, B5-58
136226	B5-56, B5-58
136227	B5-56, B5-58
136228	B5-56, B5-58
136229	B5-56, B5-58
136230	B5-58
136231	B5-60, B5-61
136232	B5-60, B5-61
136233	B5-60, B5-61
136234	B5-60, B5-61
136235	B5-60, B5-61
136236	B5-61
136237	B5-61
136238	B5-50
136239	B5-50
136240	B5-50
136241	B5-50
136242	B5-50
136243	B5-50
136244	B5-50
136245	B5-50
136246	B5-50
136247	B5-54
136248	B5-54
136249	B5-54
136250	B5-54
136251	B5-54
136252	B5-56
136253	B5-56
136254	B5-56
136255	B5-56
136257	B5-56
136258	B5-20
136259	B5-20, B7-20
136260	B5-20
136261	B5-20, B7-20
136262	B5-20, B7-20
136263	B5-20, B7-20
136264	B5-20
136265	B5-20
136266	B5-20
136267	B5-20
136268	B5-30
136269	B5-30
136270	B5-30
136271	B5-30
136272	B5-30
136273	B5-30
136274	B5-30
136275	B5-42
136276	B5-42
136277	B5-42
136278	B5-42
136279	B5-42
136280	B5-42
136281	B5-42
136282	B5-42
136283	B5-42
136284	B5-42
136285	B5-42
136286	B5-48
136287	B5-48
136288	B5-48
136289	B5-48
136290	B5-48
136291	B5-48
136293	B5-48
136294	B5-48
136295	B5-48
136296	B5-52
136297	B5-52
136298	B5-52
136299	B5-52
136300	B5-52
136301	B5-52
136302	B5-52
136303	B5-58
136304	B5-58
136305	B5-58
136306	B5-58
136307	B5-58
136308	B5-58
136309	B5-58
136310	B5-58
136311	B5-58
136312	B5-58
136315	B2-66
136316	B2-66
136317	B2-66
136318	B2-66
136319	B2-66
136320	B2-66
136321	B2-66
136322	B2-66
136323	B2-66
136324	B2-66
136325	B2-66
136326	B2-66
136327	B2-66
136328	B2-66
136329	B2-66
136330	B2-66
136331	B5-32
136332	B5-32
136333	B5-32
136334	B5-32
136335	B5-32
136336	B5-32
136337	B5-32
136338	B5-32
136339	B5-32
136340	B5-32
136341	B5-32
136342	B5-32
136343	B5-34
136344	B5-34
136345	B5-34
136346	B5-34
136347	B5-34
136348	B5-34

PART NUMBER INDEX

Part Number	Page
136349	B5-34
136350	B5-34
136351	B5-34
136352	B5-34
136353	B5-34
136354	B5-34
136355	B5-32
136356	B5-32
136357	B5-32
136358	B5-32
136359	B5-32
136360	B5-34
136361	B5-34
136362	B5-34
136363	B5-34
136364	B5-34
136365	B5-24
136366	B5-24
136367	B5-24
136368	B5-24
136369	B5-24
136370	B5-24
136371	B5-24
136383	B5-24
136384	B5-24
136385	B5-24
136386	B5-24
136387	B5-24
136388	B5-24
136389	B5-24
136521	B5-8, B5-12, B5-16, B5-26, B5-28, B5-32, B5-34, B5-35, B5-38, B5-62, B5-68
136522	B5-8, B5-12, B5-16, B5-24, B5-26, B5-28, B5-32, B5-33, B5-34, B5-35, B5-38, B5-50, B5-54, B5-62, B5-68
136523	B5-8, B5-12, B5-16, B5-24, B5-26, B5-28, B5-32, B5-33, B5-34, B5-35, B5-38, B5-50, B5-54, B5-62, B5-68
136524	B5-8, B5-16, B5-18, B5-24, B5-26, B5-28, B5-32, B5-33, B5-34, B5-35, B5-38, B5-50, B5-54, B5-62, B5-68
136525	B5-8, B5-12, B5-16, B5-24, B5-26, B5-28, B5-32, B5-33, B5-34, B5-35, B5-38, B5-46, B5-50, B5-54, B5-62, B5-68
136526	B5-8, B5-12, B5-16, B5-18, B5-24, B5-26, B5-28, B5-32, B5-33, B5-34, B5-35, B5-38, B5-46, B5-50, B5-54, B5-62, B5-68
136527	B5-8, B5-12, B5-16, B5-18, B5-24, B5-26, B5-28, B5-32, B5-33, B5-34, B5-35, B5-38, B5-46, B5-50, B5-54, B5-62, B5-68
136528	B5-8, B5-12, B5-16, B5-20, B5-22, B5-24, B5-26, B5-28, B5-30, B5-32, B5-33, B5-34, B5-35, B5-38, B5-42, B5-44, B5-46, B5-48, B5-50, B5-52, B5-54, B5-58, B5-62, B5-66, B5-68
136529	B5-8, B5-12, B5-16, B5-18, B5-24, B5-26, B5-28, B5-32, B5-33, B5-34, B5-35, B5-38, B5-46, B5-50, B5-54, B5-62, B5-68
136530	B5-10, B5-14, B5-16, B5-24, B5-26, B5-28, B5-36, B5-40, B5-46, B5-48, B5-50, B5-54, B5-64, B5-66, B5-68
136531	B5-10, B5-14, B5-16, B5-24, B5-26, B5-28, B5-30, B5-36, B5-40, B5-46, B5-48, B5-50, B5-56, B5-64, B5-66, B5-68
136532	B5-10, B5-14, B5-16, B5-18, B5-24, B5-26, B5-28, B5-36, B5-40, B5-46, B5-50, B5-56, B5-64, B5-68
136533	B5-10, B5-14, B5-16, B5-18, B5-24, B5-26, B5-28, B5-36, B5-40, B5-46, B5-50, B5-56, B5-64, B5-68
136534	B5-10, B5-14, B5-16, B5-18, B5-24, B5-26, B5-28, B5-33, B5-36, B5-40, B5-46, B5-50, B5-56, B5-60, B5-64, B5-68
136535	B5-10, B5-14, B5-16, B5-18, B5-24, B5-26, B5-28, B5-33, B5-36, B5-40, B5-46, B5-50, B5-56, B5-60, B5-64, B5-68
136536	B5-10, B5-14, B5-16, B5-18, B5-26, B5-28, B5-36, B5-40, B5-46, B5-50, B5-56, B5-60, B5-64, B5-68
136537	B5-10, B5-14, B5-16, B5-18, B5-26, B5-28, B5-36, B5-40, B5-46, B5-50, B5-56, B5-60, B5-64, B5-68
136538	B5-10, B5-14, B5-16, B5-18, B5-26, B5-28, B5-36, B5-40, B5-46, B5-50, B5-56, B5-60, B5-64, B5-68
136539	B5-46, B5-56, B5-64, B5-68
136540	B5-10, B5-14, B5-16, B5-36, B5-40, B5-56, B5-64, B5-68
136541	B5-20, B5-22, B5-30, B5-42, B5-44, B5-48, B5-52, B5-58, B5-66, B5-68
136542	B5-20, B5-22, B5-30, B5-42, B5-44, B5-48, B5-52, B5-58, B5-66, B5-68
136543	B5-20, B5-22, B5-30, B5-42, B5-44, B5-48, B5-52, B5-58, B5-66, B5-68
136544	B5-20, B5-22,B5-30, B5-42, B5-44, B5-48, B5-52, B5-58, B5-61, B5-66, B5-68
136545	B5-20, B5-22, B5-30, B5-42, B5-44, B5-48, B5-52, B5-58, B5-61, B5-66, B5-68
136546	B5-20, B5-22, B5-30, B5-42, B5-44, B5-48, B5-52, B5-58, B5-61, B5-66, B5-68
136547	B5-10, B5-14, B5-20, B5-22, B5-36, B5-40, B5-42, B5-44, B5-48, B5-58, B5-61, B5-66, B5-68
136548	B5-10, B5-14, B5-20, B5-22, B5-36, B5-40, B5-42, B5-44, B5-46, B5-48, B5-56, B5-58, B5-60, B5-61, B5-64, B5-66, B5-68
136549	B5-20, B5-22, B5-42, B5-44, B5-58, B5-61, B5-66, B5-68
136550	B5-20, B5-22, B5-42, B5-44, B5-48, B5-58, B5-61, B5-66, B5-68
136551	B5-20, B5-22, B5-42, B5-44, B5-48, B5-58, B5-61, B5-66, B5-68
136552	B5-20, B5-22, B5-42, B5-44, B5-48, B5-61, B5-66, B5-68
136553	B5-8, B5-12, B5-16, B5-24, B5-26, B5-28, B5-32, B5-34, B5-35, B5-38, B5-50, B5-54, B5-62, B5-68
136554	B5-8, B5-12, B5-16, B5-18, B5-24, B5-26, B5-28, B5-32, B5-34, B5-35, B5-38, B5-50, B5-54, B5-62, B5-68
136555	B5-8, B5-12,B5-16, B5-18, B5-24, B5-26, B5-28, B5-32, B5-34, B5-35, B5-38, B5-46, B5-50, B5-54, B5-62, B5-68

PART NUMBER INDEX

Part Number	Page
136556	B5-8, B5-12, B5-16, B5-18, B5-24, B5-26, B5-28, B5-32, B5-34, B5-35, B5-38, B5-46, B5-50, B5-54, B5-62, B5-68
136557	B5-10, B5-14, B5-16, B5-18, B5-26, B5-28, B5-36, B5-40, B5-46, B5-50, B5-56, B5-64, B5-68
136558	B5-10, B5-14, B5-16, B5-18, B5-24, B5-26, B5-28, B5-36, B5-40, B5-46, B5-50, B5-56, B5-60, B5-64, B5-68
136559	B5-10, B5-14, B5-16, B5-18, B5-26, B5-28, B5-36, B5-40, B5-46, B5-50, B5-56, B5-60, B5-64, B5-68
136560	B5-46, B5-56, B5-60, B5-64, B5-68
136561	B5-20, B5-22, B5-30, B5-42, B5-44, B5-48, B5-52, B5-58, B5-66, B5-68
136562	B5-20, B5-22, B5-30, B5-42, B5-44, B5-48, B5-52, B5-58, B5-66, B5-68
136563	B5-20, B5-22, B5-30, B5-42, B5-44, B5-48, B5-52, B5-58, B5-66, B5-68
136564	B5-20, B5-22, B5-30, B5-42, B5-44, B5-48, B5-52, B5-58, B5-66, B5-68
136565	B5-20, B5-22, B5-30, B5-42, B5-44, B5-48, B5-52, B5-58, B5-68
136566	B5-20, B5-22, B5-30, B5-42, B5-44, B5-48, B5-52, B5-58, B5-66, B5-68
136567	B5-22, B5-30, B5-42, B5-44, B5-48, B5-52, B5-58, B5-66, B5-68
136568	B5-10, B5-14,B5-20, B5-22, B5-36, B5-40, B5-42, B5-44, B5-48, B5-58, B5-66, B5-68
136569	B5-20, B5-22, B5-42, B5-44, B5-58, B5-66, B5-68
136570	B5-20, B5-22, B5-42, B5-44, B5-48, B5-58, B5-66, B5-68
136571	B5-20, B5-22, B5-42, B5-44, B5-48, B5-66, B5-68
136574	B5-12
136588	B5-8, B5-12, B5-16, B5-26, B5-28, B5-32, B5-34, B5-35, B5-38, B5-62, B5-68
136589	B5-8, B5-12, B5-16, B5-26, B5-28, B5-32, B5-34, B5-35, B5-38, B5-62, B5-68
136590	B5-8, B5-12, B5-16, B5-24, B5-26, B5-28, B5-32, B5-33, B5-34, B5-35, B5-38, B5-50, B5-54, B5-62, B5-68
136591	B5-8, B5-12, B5-16, B5-24, B5-26, B5-28, B5-32, B5-33, B5-34, B5-35, B5-38, B5-46, B5-50, B5-54, B5-62, B5-68
136592	B5-10, B5-14, B5-16, B5-24, B5-26, B5-28, B5-36, B5-40, B5-46, B5-50, B5-54, B5-64, B5-68
136593	B5-10, B5-14, B5-16, B5-24, B5-26, B5-28, B5-36, B5-40, B5-46, B5-50, B5-54, B5-64, B5-68
136594	B5-10, B5-14, B5-16, B5-18, B5-26, B5-28, B5-36, B5-40, B5-46, B5-50, B5-56, B5-60, B5-64, B5-68
136595	B5-10, B5-14, B5-16, B5-36, B5-40, B5-56, B5-64, B5-68
136596	B5-10, B5-14, B5-16, B5-36, B5-40, B5-56, B5-64, B5-68
136597	B5-20, B5-22,B5-30, B5-42, B5-44, B5-52, B5-58, B5-66, B5-68
136598	B5-20, B5-22,B5-30, B5-42, B5-44, B5-48, B5-52, B5-58, B5-66, B5-68
136599	B5-20, B5-22,B5-30, B5-42, B5-44, B5-48, B5-52, B5-58, B5-61, B5-66, B5-68
136600	B5-10, B5-14,B5-16, B5-20, B5-22, B5-26, B5-28, B5-30, B5-36, B5-40, B5-42, B5-44, B5-46, B5-48, B5-50, B5-52, B5-56, B5-58, B5-61, B5-64, B5-66, B5-68
136601	B5-10, B5-14, B5-16, B5-20, B5-22, B5-26, B5-28, B5-30, B5-36, B5-40, B5-42, B5-44, B5-46, B5-48, B5-50, B5-52, B5-56, B5-58, B5-61, B5-64, B5-66, B5-68
136602	B5-20
136603	B5-20, B5-22, B5-42, B5-44, B5-48, B5-61, B5-66, B5-68
136657	B5-24
136695	B1-15
136696	B1-15
136697	B1-15
136698	B1-15
136699	B1-15
136700	B1-15
136701	B1-15
136702	B1-15
136703	B1-15
136704	B1-17
136705	B1-17
136706	B1-17
136707	B1-17
136708	B1-17
136709	B1-17
136710	B1-19
136711	B1-19
136712	B1-19
136713	B1-19
136714	B1-19
136715	B1-19
136716	B1-19
136717	B1-19
136718	B1-19
136719	B1-23
136720	B1-23
136721	B1-23
136722	B1-23
136723	B1-23
136724	B1-23
136725	B1-26
136726	B1-26
136727	B1-26
136728	B1-26
136729	B1-26
136730	B1-26
136731	B1-26
136732	B1-26
136733	B1-26
136734	B1-28
136735	B1-28
136736	B1-28
136737	B1-28
136738	B1-28
136739	B1-28
136740	B1-15
136741	B1-15
136742	B1-15
136743	B1-15
136744	B1-15
136745	B1-15
136746	B1-15
136747	B1-17
136748	B1-17
136749	B1-17
136750	B1-17
136751	B1-19
136752	B1-19
136753	B1-19
136754	B1-19
136755	B1-19
136756	B1-19
136757	B1-19
136758	B1-23
136759	B1-23
136760	B1-23
136761	B1-23

PART NUMBER INDEX

DODGE®

Part Number	Page	Part Number	Page	Part Number	Page	Part Number	Page
136762	B1-26	136818	B1-21	136872	B1-24	136936	B2-33
136763	B1-26	136819	B1-21	136873	B1-22	136937	B2-33
136764	B1-26	136820	B1-21	136874	B1-22	136938	B2-33
136765	B1-26	136821	B1-21	136875	B1-22	136939	B2-38
136766	B1-26	136822	B1-21	136876	B1-22	136940	B2-38
136767	B1-26	136825	B1-27	136879	B1-21	136941	B2-38
136768	B1-26	136826	B1-27	136880	B1-21	136942	B2-38
136769	B1-28	136827	B1-27	136881	B1-21	136943	B2-38
136770	B1-28	136828	B1-27	136882	B1-21	136944	B2-38
136771	B1-28	136829	B1-27	136885	B1-27	136945	B2-38
136772	B1-28	136830	B1-27	136886	B1-27	136946	B2-38
136773	B1-16	136831	B1-27	136887	B1-27	136947	B2-39
136774	B1-16	136832	B1-27	136888	B1-27	136948	B2-39
136775	B1-16	136833	B1-32	136889	B1-27	136949	B2-39
136776	B1-16	136834	B1-32	136890	B1-27	136950	B2-39
136777	B1-16	136835	B1-32	136891	B1-32	136951	B2-39
136778	B1-16	136836	B1-32	136892	B1-32	136952	B2-39
136779	B1-16	136837	B1-32	136893	B1-32	136953	B2-39
136780	B1-16	136838	B1-32	136894	B1-32	136954	B2-39
136781	B1-16	136839	B1-32	136895	B1-32	136955	B2-29
136782	B1-16	136840	B1-32	136896	B1-32	136956	B2-29
136783	B1-16	136841	B1-30	136897	B1-30	136957	B2-29
136784	B1-18	136842	B1-30	136898	B1-30	136958	B2-29
136785	B1-18	136843	B1-30	136899	B1-30	136959	B2-29
136786	B1-18	136844	B1-30	136900	B1-30	136960	B2-29
136787	B1-18	136845	B1-30	136901	B1-30	136961	B2-34
136788	B1-18	136846	B1-30	136902	B1-30	136962	B2-34
136789	B1-18	136847	B1-30	136912	B2-29	136963	B2-34
136792	B1-18	136848	B1-30	136913	B2-29	136964	B2-34
136793	B1-20	136849	B1-16	136914	B2-29	136965	B2-34
136794	B1-20	136850	B1-16	136915	B2-29	136966	B2-33
136795	B1-20	136851	B1-16	136916	B2-29	136967	B2-33
136796	B1-20	136852	B1-16	136917	B2-29	136968	B2-33
136797	B1-20	136853	B1-16	136918	B2-29	136969	B2-33
136798	B1-20	136854	B1-16	136919	B2-29	136970	B2-33
136799	B1-20	136855	B1-18	136920	B2-34	136971	B2-33
136800	B1-20	136856	B1-18	136921	B2-34	136972	B2-33
136801	B1-24	136857	B1-18	136922	B2-34	136973	B2-33
136802	B1-24	136858	B1-18	136923	B2-34	136974	B2-38
136803	B1-24	136859	B1-18	136924	B2-34	136975	B2-38
136804	B1-24	136860	B1-18	136925	B2-34	136976	B2-38
136805	B1-24	136861	B1-20	136926	B2-34	136977	B2-38
136806	B1-24	136862	B1-20	136927	B2-33	136978	B2-38
136808	B1-24	136863	B1-20	136928	B2-33	136979	B2-38
136809	B1-22	136864	B1-20	136929	B2-33	136980	B2-39
136810	B1-22	136865	B1-20	136930	B2-33	136981	B2-39
136811	B1-22	136866	B1-20	136931	B2-33	136982	B2-39
136812	B1-22	136867	B1-24	136932	B2-33	136983	B2-39
136813	B1-22	136868	B1-24	136933	B2-33	136984	B2-39
136814	B1-22	136869	B1-24	136934	B2-33	136985	B2-39
136817	B1-21	136870	B1-24	136935	B2-33	136986	B1-15

PART NUMBER INDEX

Part Number	Page
136987	B1-19
136988	B1-26
136989	B1-16
136990	B1-18
136991	B1-20
136992	B1-24
136993	B1-27
136994	B1-32
136995	B1-30
136997	B2-38
136998	B2-39
139292	B5-48
163256	B5-56
230050	B17-44
230053	B17-44
230056	B17-44
230059	B17-44
230062	B17-44
230065	B17-44
230068	B17-44
230071	B17-44
230074	B17-44
230077	B17-44
230080	B17-44
230134	B17-44
230137	B17-44
230140	B17-44
231063	B17-52
231069	B17-52
231075	B17-52
231081	B17-52
231087	B17-52
231096	B17-52
231102	B17-52
231108	B17-52
231114	B17-52
231120	B17-52
231126	B17-52
231135	B17-52
231141	B17-52
231150	B17-52
389820	B18-25
389821	B18-25
389822	B18-25
389823	B18-25
389824	B18-25
389825	B18-25
389826	B18-25
389827	B18-25
389828	B18-25
389829	B18-25
389830	B18-25
389831	B18-25
389832	B18-25
389833	B18-25
389834	B18-25
389835	B18-25
389836	B18-25
389837	B18-25
389923	B4-97, B8-24
389924	B4-97, B8-24
389925	B8-24
389926	B8-24
389927	B8-24
389928	B8-24
389929	B8-24
389930	B8-24
389931	B8-24
389932	B8-24
389933	B8-24
389934	B8-24
389935	B8-24
389936	B8-24
389937	B8-24
389938	B8-24
389939	B8-24
389940	B8-24
389941	B8-24
405015	B17-34
407036	B15-112
407302	B15-112, B15-124
407305	B15-112, B15-124
407306	B15-124
416173	B19-38
416229	B19-38
416231	B19-38
416275	B19-38
419008	B15-113,B15-124
419150	B15-103, B15-111, B15-113, B15-124
419151	B15-113, B15-124
419152	B15-103, B15-111, B15-113, B15-124
419153	B15-113, B15-124
419154	B15-103, B15-111, B15-113, B15-124
419156	B15-103, B15-111
419158	B15-103, B15-111, B15-115, B15-124
419160	B15-103, B15-111, B15-115, B15-124
419162	B15-103, B15-111, B15-115, B15-124
419164	B15-103, B15-111, B15-115, B15-124
419166	B15-103, B15-111, B15-115, B15-124
419168	B15-103, B15-111, B15-115, B15-124
419170	B15-103, B15-111, B15-115, B15-124
419171	B15-103, B15-111
419172	B15-103, B15-111, B15-115, B15-124
419174	B15-103, B15-111
419176	B15-103, B15-111, B15-115, B15-124
419178	B15-103, B15-111
419180	B15-113, B15-124
419181	B15-113, B15-124
419182	B15-113, B15-124
419183	B15-113, B15-124
419184	B15-112, B15-124
419185	B15-112, B15-124
419187	B15-112, B15-124
419188	B15-112, B15-124
420030	B16-51
421243	B13-16
421244	B13-16
421245	B13-16
421246	B13-16
421247	B13-16
421248	B13-16
421249	B13-16
421250	B13-16
421251	B13-16
421252	B13-16
421253	B13-16
421254	B13-16
421255	B13-16
421256	B13-16
421257	B13-16
421258	B13-16
421259	B13-16
421260	B16-35
421261	B16-35
421262	B16-35
421263	B16-35
421264	B16-35
421265	B15-101, B15-107, B16-35
421266	B15-101, B15-107, B16-35
421267	B15-101, B15-107, B16-35, B16-57, B16-59, B16-61, B16-63
421268	B15-101, B15-107, B16-35, B16-57, B16-59, B16-61, B16-63
421269	B15-101, B15-107, B16-35, B16-57, B16-59, B16-61, B16-63
421270	B15-101, B15-107, B16-35, B16-57, B16-59, B16-61, B16-63
421271	B15-101, B15-107, B16-35, B16-57, B16-59, B16-61, B16-63
421272	B15-101, B15-107, B16-35, B16-57, B16-59, B16-61, B16-63
421273	B15-101, B15-107, B16-35, B16-57, B16-59, B16-61, B16-63
421274	B15-101, B15-107, B16-35, B16-57, B16-59, B16-61, B16-63
421275	B15-101, B15-107, B16-35, B16-57, B16-59, B16-61, B16-63
421276	B15-101, B15-107, B16-57, B16-59, B16-61, B16-63
421277	B15-101, B15-107, B16-57, B16-59, B16-61, B16-63
421278	B15-101, B15-107, B16-57, B16-59, B16-61, B16-63
421279	B15-101, B15-107, B16-57, B16-59, B16-61, B16-63

PART NUMBER INDEX

DODGE®

Part Number	Page
421280	B15-101, B15-107, B16-57, B16-59, B16-61, B16-63
421282	B15-85, B15-92, B16-47
421283	B15-85, B15-92
421284	B15-85, B15-92
421285	B15-84, B15-92
421286	B15-84, B15-92
421287	B15-84, B15-85, B15-92, B16-49, B16-53
421288	B15-85, B15-92
421289	B15-85, B15-92
421290	B15-84, B15-92
421291	B15-84, B15-92
421292	B15-84, B15-92
421293	B15-85, B15-92
421294	B15-84, B15-92
421362	B13-21
421363	B13-21
421364	B13-21
421365	B13-21
421366	B13-21
421367	B13-21
421368	B13-21
421369	B13-21
421370	B13-21
421371	B13-21
421372	B13-21
421396	B16-35
421399	B16-39
421403	B16-49, B16-53
422001	B15-26, B15-32, B15-43, B15-54, B15-70, B16-38
422003	B15-26, B15-32, B15-43, B15-70, B16-38
422005	B15-26, B15-32, B15-43, B15-54, B15-70, B16-38, B16-65
422007	B15-26, B15-32, B15-43, B15-70, B16-38, B16-65
422009	B15-28, B15-32, B15-33, B15-43, B15-54, B15-70, B16-38, B16-65
422011	B15-28, B15-33, B15-43, B15-54, B15-70, B16-38, B16-65
422013	B15-28, B15-33, B15-43, B15-70, B16-38, B16-65
422015	B15-28, B15-33, B15-43, B15-54, B15-70, B16-38, B16-65
422017	B15-28, B15-33, B15-43, B15-54, B15-70, B16-38, B16-65
422019	B15-28, B15-33, B15-43, B15-70, B16-38, B16-65
422021	B15-28, B15-33, B15-43, B15-70, B16-38, B16-65
422023	B15-28, B15-33, B15-43, B15-54, B15-70, B16-65
422025	B15-28, B15-33, B15-43, B15-70, B16-65
422027	B15-28, B15-33, B15-43, B15-54, B15-70, B16-65
422029	B15-28, B15-30, B15-33, B15-34, B15-43, B15-70, B16-65
422030	B15-30, B15-34, B15-43, B15-70, B16-47
422031	B15-30, B15-34, B15-43, B15-70, B16-47, B16-51
422035	B15-95, B15-98
422036	B15-85, B15-92
422054	B15-85, B15-92
422064	B15-28, B15-33, B15-43, B15-70, B16-65
422123	B15-26, B15-32, B15-43, B15-70, B16-38
422124	B15-26, B15-32, B15-43, B15-70, B16-38
422134	B15-26, B15-32, B15-43, B16-38
422137	B15-26, B15-32, B15-43, B16-38
422140	B15-95, B15-98
422502	B15-84
422511	B15-84, B15-92
422525	B15-85, B15-93
422529	B15-84, B15-85
422531	B15-84, B15-85, B15-92
422535	B15-85, B15-91
422538	B15-31, B15-44, B15-71
422542	B15-30, B15-35
422543	B15-30, B15-34, B15-43, B15-70
422544	B15-30
422545	B15-31, B15-34, B15-41, B15-84, B15-91
422554	B15-45, B15-125
422555	B15-67
422556	B15-65
422560	B15-30, B15-35
422567	B15-31, B15-44, B15-71
422571	B15-67
422572	B15-65
422573	B15-31, B15-34, B15-41, B15-69, B15-84, B15-91
422576	B15-84, B15-93
422580	B15-84
422582	B15-84, B15-92
422588	B15-84, B15-91
422594	B15-31, B15-41, B15-69, B15-84, B15-91
422595	B17-29
422596	B17-29
422597	B17-29
422599	B17-29
422600	B17-29
422601	B17-29
422602	B17-29
422603	B17-29
422604	B11-45
422606	B15-31, B15-41, B15-69
422843	B15-85, B15-93
422844	B15-84, B15-85, B15-92
422978	B16-38
422979	B16-38, B16-65
422980	B15-48, B15-50
422981	B15-48, B15-50
422982	B15-48, B15-50
422983	B15-48, B15-50
422984	B15-48, B15-50
422985	B15-48, B15-50
422986	B15-48, B15-49, B15-50, B15-51
422987	B15-49, B15-51
422988	B15-49, B15-51
422989	B15-49, B15-51
422990	B15-49, B15-51
422991	B15-49, B15-51
422992	B15-49, B15-51
422996	B16-35, B16-57, B16-59, B16-61, B16-63
423100	B15-98, B16-43
423102	B15-95, B15-98, B16-43
423104	B15-95, B15-98, B16-43
423106	B15-95, B15-98, B16-43
423108	B15-95, B15-98, B16-43
423110	B15-95, B15-98, B16-43
423112	B15-98
423114	B15-95, B15-98
423116	B15-95, B15-98
423118	B15-95, B15-98
423120	B15-95, B15-98
423122	B15-95, B15-98
423124	B15-112, B15-121, B16-41
423125	B15-112, B15-121, B16-41
423126	B15-112, B15-121, B16-41
423127	B15-112, B15-121, B16-41
423128	B15-112, B15-121, B16-41

PART NUMBER INDEX

Part Number	Page
423129	B15-112, B15-121, B16-41
423130	B15-112, B15-121, B16-41
423131	B15-112, B15-121, B16-41
423132	B15-114, B15-121, B16-41
423133	B15-114, B15-121
423134	B15-114, B15-121
423135	B15-114, B15-121
423136	B15-114, B15-121
423137	B15-114, B15-121
423138	B15-114, B15-121
423139	B15-114, B15-121
423140	B15-114, B15-121
423143	B15-112, B15-121, B16-41
423144	B15-112, B15-121, B16-41
423145	B16-41
423372	B15-95, B15-98, B16-43
423373	B15-95, B15-98, B16-43
423374	B16-43
423375	B16-43
423376	B16-43
430020	B4-102, B5-73, B6-62, B6-65, B6-67
430081	B17-34
430086	B17-34
430087	B17-34
430153	B18-29
430155	B18-13, B18-15, B18-17, B18-30
430198	B18-13, B18-30
430561	B18-15
430831	B18-15
431389	B18-15
431399	B18-15
432153	B18-13, B18-30
432165	B18-21
432181	B18-13, B18-18, B18-23
432184	B18-13, B18-18, B18-23
432187	B18-13, B18-18, B18-23
432190	B18-13, B18-18, B18-22
432193	B18-13, B18-18, B18-22
432196	B18-13, B18-18, B18-22
432276	B18-21
432277	B18-21
432278	B18-21
432279	B18-21
432448	B18-21
433326	B18-29
434706	B18-31
434707	B18-31
434708	B18-31
434709	B18-31
434710	B18-31
434711	B18-31
434712	B18-31
434713	B18-31
434714	B18-31
434715	B18-31
434716	B18-31
434719	B18-11, B18-26
434720	B18-26
434721	B18-13, B18-18, B18-26
434722	B18-26
434725	B18-13, B18-18, B18-26, B18-30
434726	B18-26, B18-30
434727	B18-13, B18-15, B18-18, B18-26
434728	B18-26
434729	B18-15, B18-17, B18-18, B18-26
434730	B18-26
434735	B18-18, B18-26
434736	B18-26
434770	B18-24
434771	B18-24, B18-25
434772	B18-24, B18-25
434773	B18-24, B18-25
434774	B18-24
434775	B18-24
434797	B18-25
435001	B18-24
435002	B18-24
435003	B18-24
435004	B18-24
435005	B18-24
435006	B18-24
435007	B18-24
435008	B18-24
435009	B18-24
435010	B18-24
435011	B18-24
435012	B18-24, B18-25
435013	B18-24, B18-25
435014	B18-24
435015	B18-24, B18-25
435016	B18-24, B18-25
435017	B18-24
435018	B18-24, B18-25
435019	B18-24, B18-25
435021	B18-25
435027	B18-24
435028	B18-24
435029	B18-24
435030	B18-24
435031	B18-24
435032	B18-24
435033	B18-25
435035	B18-25
435036	B18-25
435037	B18-25
435038	B18-25
435039	B18-25
435040	B18-25
456225	B17-53
456226	B17-53
456227	B17-53
456228	B17-53
456229	B17-53
456230	B17-53
456231	B17-53
456232	B17-53
456234	B17-53
456235	B17-53
456236	B17-53
456237	B17-53
456238	B17-53
456239	B17-53
460901	B15-101, B15-111, B15-112, B15-124
460902	B15-101, B15-111, B15-112, B15-124
460903	B15-101, B15-111, B15-112, B15-124
460904	B15-101, B15-111
460905	B15-101, B15-111, B15-124
460906	B15-101, B15-111, B15-124
046291	B16-57, B16-59, B16-61, B16-63
480037	B4-110, B7-52
480455	B4-110, B7-52
480456	B4-110, B7-52
480457	B4-110, B7-52
492598	B17-29
496150	B16-57, B16-59, B16-61, B16-63, B16-65
496151	B16-57, B16-59, B16-61, B16-63, B16-65
496154	B16-57, B16-59, B16-61, B16-63, B16-65
496157	B16-57, B16-59, B16-61, B16-63, B16-65
496159	B16-57, B16-59, B16-61, B16-63, B16-65
496162	B16-57, B16-59, B16-61, B16-63, B16-65
496165	B16-57, B16-59, B16-61, B16-63, B16-65
496168	B16-57, B16-59, B16-61, B16-63, B16-65
496171	B16-57, B16-59, B16-61, B16-63, B16-65
496173	B16-57, B16-59, B16-61, B16-63, B16-65
496176	B16-57, B16-59, B16-61, B16-63, B16-65
496179	B16-57, B16-59, B16-61, B16-63, B16-65
496182	B16-57, B16-59, B16-61, B16-63, B16-65
496185	B16-57, B16-59, B16-61, B16-63, B16-65

PART NUMBER INDEX

Part Number	Page
496187	B16-57, B16-59, B16-61, B16-63, B16-65
496188	B16-57, B16-59, B16-61, B16-63, B16-65
496309	B16-61
496310	B16-61
496311	B16-61
496312	B16-61
496313	B16-61
496314	B16-61
496315	B16-61
496316	B16-61
496317	B16-61
496318	B16-61
496319	B16-61
496320	B16-61
496333	B16-61
496334	B16-61
496335	B16-61
496336	B16-61
496337	B16-61
496338	B16-61
496339	B16-61
496340	B16-61
496341	B16-61
496342	B16-61
496343	B16-61
496344	B16-61
496353	B16-61
496354	B16-61
496355	B16-61
496356	B16-61
496357	B16-61
496358	B16-61
496359	B16-61
496360	B16-61
496361	B16-61
496362	B16-61
496363	B16-61
496364	B16-61
496400	B16-41
496401	B16-41
496402	B16-41
496403	B16-41
496404	B16-41
496405	B16-41
496406	B16-41
496407	B16-41
496408	B16-41
496409	B16-41
496410	B16-41
496411	B16-41
496412	B16-43
496413	B16-43
496414	B16-43
496415	B16-43
496416	B16-43
496417	B16-43
496418	B16-43
496419	B16-43
496420	B16-43
496421	B16-43
496422	B16-43
496423	B16-43
496424	B16-43
496425	B16-43
496426	B16-43
496427	B16-43
496428	B16-43
496429	B16-43
496430	B16-43
496431	B16-43
496432	B16-43
496433	B16-43
496434	B16-43
496435	B16-43
496436	B16-43
496437	B16-43
496438	B16-43
496439	B16-43
496440	B16-43
496442	B16-43
496443	B16-43
496444	B16-43
496446	B16-37
496447	B16-37
496448	B16-37
496449	B16-37
496450	B16-37
496451	B16-37
496452	B16-37
496453	B16-37
496454	B16-37
496455	B16-37
496456	B16-37
496457	B16-37
496458	B16-37
496459	B16-37
496460	B16-37
496461	B16-37
496462	B16-37
496464	B16-37
496465	B16-37
496466	B16-37
496467	B16-37
496468	B16-37
496469	B16-37
496470	B16-37
496471	B16-37
496472	B16-37
496473	B16-37
496474	B16-37
496475	B16-37
496476	B16-37
496477	B16-37
496478	B16-37
496479	B16-37
496480	B16-37
496482	B16-38
496483	B16-38
496484	B16-38
496485	B16-38
496486	B16-38
496487	B16-38
496488	B16-38
496489	B16-38
496490	B16-38
496491	B16-38
496492	B16-38
496493	B16-38
496494	B16-38
496495	B16-38
496496	B16-38
496497	B16-38
496498	B16-38
701659	B16-39
702830	B16-39
702844	B16-39
702857	B16-39
702867	B16-39
702883	B16-39
702893	B16-39
702904	B16-39
702907	B16-39
703407	B16-65
703619	B16-45
703628	B16-45
703644	B16-45
703656	B16-45
703661	B16-45
703670	B16-45
703679	B16-45
703689	B16-45
703694	B16-47, B16-51
703711	B16-47, B16-51
703725	B16-47, B16-51
703726	B16-47
703738	B16-47, B16-51
703739	B16-47, B16-51
703831	B16-49, B16-53
703840	B16-49, B16-53
703850	B16-49, B16-53
703866	B16-49, B16-53
703873	B16-49, B16-53
703890	B16-49, B16-53
703892	B16-49, B16-53
703903	B16-49, B16-53
703941	B16-38
703943	B16-35
703951	B16-38
703967	B16-35, B16-38
703971	B16-38
703976	B16-35
703982	B16-38
703989	B16-38
703990	B16-35
703996	B16-38
707376	B16-6
707381	B16-6
707400	B16-6
707402	B16-6
707405	B16-6
707410	B16-6
707415	B16-6
707419	B16-6
707422	B16-6
707428	B16-6
707431	B16-6
707434	B16-6
707439	B16-6
707453	B16-6
708959	B16-34, B16-38, B16-41, B16-43
708966	B16-34, B16-38, B16-41, B16-43, B16-45
708970	B16-34, B16-38, B16-41, B16-43, B16-45
708976	B16-34, B16-38, B16-41, B16-43, B16-45

PART NUMBER INDEX

Part Number	Page
708983	B16-34, B16-38, B16-41, B16-43, B16-45
708989	B16-45
709137	B16-34, B16-38
709140	B16-34, B16-38, B16-41, B16-43
709143	B16-34, B16-38, B16-41, B16-43
709146	B16-34, B16-38, B16-41, B16-43
709152	B16-34, B16-38, B16-41, B16-43
709162	B16-34, B16-38, B16-41, B16-43
709166	B16-34, B16-38, B16-41, B16-43
712225	B16-35, B16-39
713043	B16-57, B16-63
713044	B16-57, B16-59, B16-63
713045	B16-57, B16-63
713046	B16-57, B16-63
713048	B16-57, B16-59, B16-63
713050	B16-57, B16-63
713052	B16-57, B16-63
713053	B16-57, B16-59, B16-63
713054	B16-57, B16-63
713055	B16-57, B16-59, B16-63
713057	B16-57, B16-63
713058	B16-57, B16-63
713061	B16-57, B16-63
713062	B16-57, B16-59, B16-63
713063	B16-57, B16-63
713064	B16-57, B16-63
713065	B16-57, B16-59, B16-63
713066	B16-57, B16-63
713067	B16-57, B16-63
713068	B16-57, B16-59, B16-63
713069	B16-57, B16-63
713071	B16-57, B16-63
713073	B16-57, B16-59, B16-63
713075	B16-57, B16-63
713078	B16-57, B16-63
713079	B16-57, B16-59, B16-63
713080	B16-57, B16-63
713082	B16-57, B16-63
713084	B16-57, B16-59, B16-63
713086	B16-57, B16-63
713087	B16-57, B16-63
713089	B16-57, B16-59, B16-63
713091	B16-57, B16-63
713092	B16-57, B16-63
713093	B16-57, B16-59, B16-63
713094	B16-57, B16-63
713096	B16-57, B16-63
713097	B16-57, B16-59, B16-63
713098	B16-57, B16-63
713099	B16-57, B16-63
713100	B16-57, B16-59, B16-63
713101	B16-57, B16-63
713103	B16-57, B16-63
713104	B16-57, B16-59, B16-63
713105	B16-57, B16-63
713153	B16-65
713154	B16-65
713155	B16-65
713156	B16-65
713157	B16-65
713158	B16-65
713159	B16-65
713160	B16-65
713161	B16-65
713162	B16-65
713163	B16-65
713164	B16-65
713165	B16-65
713166	B16-65
713167	B16-65
713168	B16-65
713169	B16-65
713170	B16-65
713171	B16-65
713172	B16-65
713174	B16-65
713175	B16-65
713176	B16-65
713178	B16-65
713181	B16-65
713182	B16-65
713183	B16-65
713184	B16-65
713185	B16-65
713186	B16-65
713571	B16-34
713579	B16-34
713586	B16-34
713588	B16-34
713596	B16-34, B16-45
713600	B16-34
713603	B16-34, B16-45
713613	B16-34, B16-45
713616	B16-34
713622	B16-34, B16-45
713633	B16-34
713634	B16-34, B16-45
713641	B16-34, B16-45
713647	B16-34, B16-45
719372	B16-39
719373	B16-39
719374	B16-39
719375	B16-39
719376	B16-39
719378	B16-39
719379	B16-39
719380	B16-39
719381	B16-39
719382	B16-39
719383	B16-39
719385	B16-39
719397	B16-43
719400	B16-39
719406	B16-39
719408	B16-39
719419	B16-45
719420	B16-45
719421	B16-45
719422	B16-45
719423	B16-45
719425	B16-45
719429	B16-45
719432	B16-47, B16-51
719434	B16-47, B16-51
719437	B16-47, B16-51
719441	B16-47, B16-51
719443	B16-47, B16-51
719445	B16-47, B16-51
719446	B16-47, B16-51
719448	B16-47, B16-51
719480	B16-49, B16-53, B16-65
719485	B16-49, B16-53
719489	B16-49, B16-53
719491	B16-49, B16-53
719492	B16-49, B16-53
719499	B16-38, B16-39, B16-65
720643	B16-57
720647	B16-57
720653	B16-57
720659	B16-57
720669	B16-57
720671	B16-57
720675	B16-57
720683	B16-57
720692	B16-57
720695	B16-57
720702	B16-57
720708	B16-57
720718	B16-57
720724	B16-57
720733	B16-57
720741	B16-57
720754	B16-57
720763	B16-57
720773	B16-57
720780	B16-57
720788	B16-57
720797	B16-57
720805	B16-57
720810	B16-57
720817	B16-57
720820	B16-57
720825	B16-57
720830	B16-57
720840	B16-57
720846	B16-57
720940	B16-65
720945	B16-65
720950	B16-65
720956	B16-65
720960	B16-65
720962	B16-65
720965	B16-65
720970	B16-65
720973	B16-65
720975	B16-65
720978	B16-65
720982	B16-65
720987	B16-65

PART NUMBER INDEX

Part Number	Page
720993	B16-65
721005	B16-65
721010	B16-65
721014	B16-65
721016	B16-65
721022	B16-65
721026	B16-65
721030	B16-65
721034	B16-65
721040	B16-65
721044	B16-65
721046	B16-65
721049	B16-65
721053	B16-65
721057	B16-65
721434	B16-57, B16-59, B16-61, B16-63
721435	B16-57, B16-59, B16-61, B16-63
725341	B16-34
725342	B16-34, B16-45
725343	B16-34, B16-45
725344	B16-34, B16-45
725345	B16-34, B16-45
725346	B16-45
725357	B16-34
725358	B16-34
725359	B16-34
725360	B16-34
725361	B16-34
725363	B16-34
725364	B16-34
725366	B16-34
725862	B16-57, B16-59, B16-61, B16-63
725863	B16-57, B16-59, B16-61, B16-63
725866	B16-57, B16-59, B16-61, B16-63
725867	B16-57, B16-59, B16-61, B16-63
726921	B16-5
726922	B16-5
726926	B16-5
726927	B16-5
726929	B16-5
726930	B16-5
726933	B16-5
726936	B16-5
726937	B16-5
726941	B16-5
726943	B16-5
726944	B16-5
726947	B16-5
726948	B16-5
726953	B16-5
726954	B16-5
726957	B16-5
726959	B16-5
726960	B16-5
726962	B16-5
726964	B16-5
726966	B16-5
734772	B18-25
738145	B16-34
738146	B16-34
738147	B16-34
738148	B16-34
738149	B16-34
738151	B16-34
738152	B16-34
738154	B16-34
738155	B16-34
738157	B16-34, B16-45
738158	B16-34, B16-45
738160	B16-34, B16-45
738162	B16-34, B16-45
738163	B16-45
738164	B16-34
738165	B16-45
738166	B16-34
738167	B16-45
738168	B16-34
738169	B16-45
738170	B16-34
738640	B16-63
738650	B16-61
738672	B16-59
739018	B16-65
739024	B16-5
739025	B16-5
739027	B16-5
739028	B16-5
739029	B16-5
739030	B16-5
739145	B16-39
739150	B16-39
739153	B16-39
739154	B16-39
739229	B16-65
739274	B16-61
739329	B16-38
740381	B16-34, B16-38
740382	B16-34, B16-38
740383	B16-34, B16-38, B16-45
740384	B16-34, B16-38, B16-45
740452	B16-35, B16-39, B16-41, B16-43
740453	B16-35, B16-39, B16-41, B16-43
740623	B16-35
741031	B16-35
741249	B16-63
741550	B16-35
741802	B16-61
742394	B16-59
742520	B16-63
742524	B16-63
744012	B16-63
744014	B16-63
744063	B16-59
744332	B16-63
744337	B16-57, B16-63
744338	B16-57, B16-59, B16-63
744400	B16-63
744515	B16-63
744533	B16-61
744558	B16-61
744774	B16-61
744856	B16-6
744857	B16-6
744858	B16-6
744859	B16-6
744860	B16-6
744861	B16-6
744862	B16-6
744863	B16-6
744864	B16-6
744865	B16-6
744866	B16-6
744867	B16-6
744868	B16-6
744869	B16-6
744975	B16-16
744976	B16-16
744977	B16-16
744978	B16-16
744979	B16-16
744980	B16-16
744981	B16-16
744982	B16-16
744983	B16-16
744984	B16-16
744985	B16-16
744986	B16-16
744987	B16-16
744988	B16-16
744989	B16-16
744990	B16-16
744991	B16-16
745145	B16-61
745155	B16-61
745397	B16-59
745413	B16-59
745448	B16-61
745543	B16-63
745647	B16-61
745685	B16-59
745728	B16-63
745747	B16-61
745752	B16-63
745814	B16-59
745878	B16-57
745984	B16-59
746211	B16-63
746277	B16-57, B16-59, B16-61, B16-63
746620	B16-61
746642	B16-59
747025	B16-34, B16-37
747026	B16-34, B16-37, B16-41, B16-43
747027	B16-34, B16-37, B16-41, B16-43
747028	B16-34, B16-37, B16-41, B16-43
747029	B16-34, B16-37, B16-41, B16-43
747030	B16-34, B16-37, B16-41, B16-43
747031	B16-34, B16-37, B16-41, B16-43
747032	B16-34, B16-37, B16-41
747033	B16-34, B16-37, B16-41, B16-43
747034	B16-34, B16-37, B16-41, B16-43
747035	B16-34, B16-37, B16-41, B16-43

PART NUMBER INDEX

Part Number	Page
747036	B16-34, B16-37, B16-41, B16-43
747037	B16-34, B16-37, B16-41, B16-43
747038	B16-34, B16-37
747039	B16-34, B16-37
747040	B16-34, B16-37
747041	B16-34, B16-37
747042	B16-45
747043	B16-45
747044	B16-45
747045	B16-45
747046	B16-45
747047	B16-45
747048	B16-45
747049	B16-45
747105	B16-35, B16-38, B16-39
747107	B16-41, B16-43
747108	B16-35, B16-38, B16-39
747110	B16-41, B16-43
747111	B16-35, B16-38, B16-39
747114	B16-41, B16-43
747115	B16-35, B16-38, B16-39
747117	B16-41, B16-43
747118	B16-35, B16-38, B16-39
747120	B16-41, B16-43
747121	B16-35, B16-38, B16-39
747122	B16-41, B16-43
747123	B16-35, B16-38, B16-39
747124	B16-41
747125	B16-35, B16-38, B16-39
747126	B16-41, B16-43
747128	B16-35, B16-38, B16-39
747129	B16-41, B16-43
747130	B16-35, B16-38, B16-39
747131	B16-41, B16-43, B16-45
747132	B16-35, B16-38, B16-39
747135	B16-41, B16-43
747136	B16-45
747137	B16-35, B16-38, B16-39
747138	B16-45
747139	B16-41, B16-43
747141	B16-35, B16-38
747142	B16-45
747143	B16-35, B16-38
747145	B16-45
747146	B16-35, B16-38
747148	B16-45
747149	B16-35, B16-38
747150	B16-45, B16-49, B16-53
747151	B16-45
747152	B16-35, B16-38
747154	B16-49, B16-53
747155	B16-47, B16-51
747156	B16-49, B16-53
747157	B16-49, B16-53
747159	B16-47, B16-51
747161	B16-47, B16-51
747162	B16-49, B16-53
747164	B16-49, B16-53
747166	B16-47, B16-51
747167	B16-47, B16-51
747168	B16-49, B16-53
747170	B16-49, B16-53
747171	B16-47, B16-51
747172	B16-47, B16-51
747173	B16-49, B16-53
747174	B16-47, B16-51
747175	B16-49, B16-53
747177	B16-39
747178	B16-39
747179	B16-39
747180	B16-39
747181	B16-39
747182	B16-39
747183	B16-39
747184	B16-39
747185	B16-39
747186	B16-39
747187	B16-39
747188	B16-39
747189	B16-35, B16-39
747190	B16-35, B16-39
747191	B16-35, B16-39
747192	B16-35, B16-39
747193	B16-35, B16-39
747194	B16-35, B16-39
747195	B16-35, B16-39
747199	B16-30
747201	B16-30
747202	B16-30
747203	B16-30
747204	B16-30
747205	B16-30
747206	B16-30
747207	B16-30
747208	B16-30
747209	B16-30
747210	B16-30
747211	B16-30
747212	B16-30
747213	B16-30
747214	B16-30
747215	B16-30
747216	B16-30
747217	B16-30
747218	B16-30
747219	B16-30
747220	B16-30
747221	B16-30
747222	B16-30
747223	B16-30
747224	B16-30
747225	B16-30
747226	B16-30
747227	B16-30
747228	B16-30
747229	B16-30
747230	B16-30
747231	B16-30
747232	B16-30
747233	B16-30
747234	B16-30
747235	B16-30
747236	B16-30
747237	B16-30
747238	B16-30
747239	B16-30
747240	B16-30
747241	B16-30
747242	B16-30
747243	B16-30
747244	B16-30
747245	B16-30
747246	B16-30
747247	B16-30
747248	B16-30
747249	B16-30
747250	B16-30
747328	B16-38
747329	B16-38
747330	B16-38
747331	B16-38
747332	B16-38
747333	B16-38
747334	B16-38
747335	B16-38
747336	B16-38
747337	B16-38
747338	B16-38
747339	B16-38
747340	B16-38
747341	B16-38
747342	B16-38
747343	B16-38
747344	B16-38
747384	B16-38
747385	B16-38
747386	B16-38
747387	B16-38
747388	B16-38
747389	B16-38
747390	B16-38
747391	B16-38
747392	B16-38
747393	B16-38
747394	B16-38
747395	B16-38
747396	B16-38
747397	B16-38
747398	B16-38
747399	B16-38
747400	B16-38
747622	B16-49, B16-53
747623	B16-49, B16-53
747624	B16-47, B16-51
747625	B16-49, B16-53
747626	B16-47, B16-49, B16-51, B16-53
747627	B16-47, B16-51
747628	B16-49, B16-53
747629	B16-47, B16-49, B16-51, B16-53
747630	B16-47, B16-51
747631	B16-49, B16-53
747632	B16-47, B16-49, B16-51, B16-53
747633	B16-47, B16-51
747634	B16-49, B16-53
747635	B16-47, B16-51

PART NUMBER INDEX

DODGE®

Part Number	Page	Part Number	Page	Part Number	Page	Part Number	Page
747636	B16-49, B16-53	747760	B16-49, B16-53	747972	B16-16		
747666	B16-47, B16-51	747900	B16-16	747973	B16-16		
747667	B16-47, B16-49, B16-51, B16-53	747901	B16-16	747976	B16-16		
		747904	B16-16	747977	B16-16		
747668	B16-47, B16-51	747905	B16-16	747980	B16-16		
747669	B16-47, B16-49, B16-51, B16-53	747908	B16-16	747981	B16-16		
		747909	B16-16	747984	B16-16		
747670	B16-47, B16-51	747912	B16-16	747985	B16-16		
747671	B16-47, B16-49, B16-51, B16-53	747913	B16-16	747988	B16-16		
		747916	B16-16	747989	B16-16		
747672	B16-47, B16-51	747917	B16-16	747992	B16-16		
747673	B16-47, B16-51	747920	B16-16	747993	B16-16		
747681	B16-49, B16-53	747921	B16-16	747996	B16-16		
747682	B16-49, B16-53	747924	B16-16	747997	B16-16		
747683	B16-49, B16-53	747925	B16-16	748000	B16-16		
747684	B16-49, B16-53	747928	B16-16	748001	B16-16		
747686	B16-49, B16-53	747929	B16-16	748004	B16-16		
747688	B16-49, B16-53	747932	B16-16	748005	B16-16		
747690	B16-49, B16-53	747933	B16-16	748008	B16-16		
747706	B16-47, B16-51	747936	B16-16	748009	B16-16		
747707	B16-47, B16-49, B16-51, B16-53	747937	B16-16	748012	B16-16		
		747940	B16-16	748013	B16-16		
747708	B16-47, B16-51	747941	B16-16				
747709	B16-47, B16-49, B16-51, B16-53	747944	B16-16				
		747945	B16-16				
747710	B16-47, B16-51	747948	B16-16				
747711	B16-47, B16-49, B16-51, B16-53	747949	B16-16				
		747952	B16-16				
747712	B16-47, B16-51	747953	B16-16				
747713	B16-47, B16-51	747956	B16-16				
747721	B16-49, B16-53	747957	B16-16				
747722	B16-49, B16-53	747960	B16-16				
747723	B16-49, B16-53	747961	B16-16				
747724	B16-49, B16-53	747964	B16-16				
747726	B16-49, B16-53	747965	B16-16				
747728	B16-49, B16-53	747968	B16-16				
747730	B16-49, B16-53	747969	B16-16				
747746	B16-49, B16-53	747972	B16-16				
747747	B16-49, B16-53	747973	B16-16				
747748	B16-47, B16-51	747976	B16-16				
747749	B16-49, B16-53	747977	B16-16				
747750	B16-47, B16-49, B16-51, B16-53	747980	B16-16				
		747981	B16-16				
747751	B16-47, B16-51	747984	B16-16				
747753	B16-47, B16-49, B16-51, B16-53	747985	B16-16				
		747988	B16-16				
747754	B16-47, B16-51	747989	B16-16				
747756	B16-47, B16-49, B16-51, B16-53	747992	B16-16				
		747993	B16-16				
747757	B16-47, B16-51	747996	B16-16				
747759	B16-47, B16-51	747997	B16-16				

KEYWORD INDEX

A

A-C Motor Information B16-40
Accessories
- Extreme Duty B3-41
- E-Z KLEEN B2-75
- Setscrew B4-90
- Solid Steel Shaft Collars B1-92, B13-56
- ULTRA KLEEN B1-33

Air Handing
- D-LOK Ball Bearings B5-66
- GRIP TIGHT B2-12
- Eccentric Collar Ball Bearings B7-84
- Setscrew Ball Bearings B3-132

Anti-Rotation Pin
- D-LOK B5-3
- Eccentric Collar Ball Bearings B7-3
- Setscrew Ball Bearings B3-3

B

Ball Bearing End Covers
- D-LOK Ball Bearings B5-67 - B5-73
- Eccentric Collar Ball Bearings B7-2, B7-85 - B7-91
- GRIP-TIGHT B2-96
- Setscrew B3-2. B3-136 - B3-137

Bearing Life Adjustment Factors B16-9 - B16-10
Bearing Load Calculations B16-11
BRONZOIL Take-Up Frame B15-39

C

Center Pull Take-Up Frames B15-24
Centrifugal Force B16-34
Circulating Oil Systems, SLEEVOIL B14-34 - B14-35
Coatings
- D-LOK Ball Bearings B5-66
- Setscrew Ball Bearings B3-132

Coefficients of Friction "f" B16-38
Common Conversion Factors B16-27 - B16-33
Concentric Clamp Collar, D-LOK Ball Bearings B5-2
Conveyor Belt FPM to RPM B16-12 - B16-13

D

D-LOK BALL BEARINGS B5-1 - B5-74
DIMENSIONS
- Mono Blocks and Plummer Blocks
- ISN Ratings B16-11
- ISN Capload B16-12
- ISN Plummer Blocks With Trident Seals B16-13
- ISN Selections B16-14
- ISNX HYD B16-17
- ISAF B16-18
- ISN Lockplate Kits B16-19
- ISN End Covers B16-19
- IMPERIAL Spanner B16-20
- ISNX Hydraulic B16-21
- SNX Cap Load B16-26
- HFO 200 B16-54

Ductile
- Inch B9-4, B9-14
- Metric B9-15

E

E FAMILY BEARINGS B6-1 - B6-74
EASY SELECTION
- **Extreme Duty** B3-4 - B3-5
- **E-Z KLEEN** B2-10
- **ULTRA KLEEN** B1-7 - B1-13

ECCENTRIC COLLAR BALL BEARINGS B7-1 - B7-92
Electrical B16-22
End Cap Kits, SLEEVOIL B14-31
ENGINEERING B16-1 - B16-40
English Standard Measurement B16-24
Expansion, Metric B9-5, B9-13
Expansion of Shafting B16-20
Extreme Duty B3-1 - B1-41
E-Z KLEEN B2-1 - B2-92

F

Features/Benefits
- D-LOK BAll Bearings B5-2 - B5-3
- Eccentric Collar Ball Bearings B7-2 - B7-3
- Extreme Duty B3-3
- E-Z KLEEN B2-2
- GRIP-TIGHT B5-2
- IMPERIAL - IP, ISAF and ISN
  - IMPERIAL - IP B14-3
  - E-IMPERIAL B14-8
  - ISAF B14-10
- International Bearings B12-2

KEYWORD INDEX

Features/Benefits (continued)
Mono Blocks and Plummer Blocks
PDNF and BLO B16-2 - B16-3
ISN B16-7
SNX B16-23
Seals B16-25
HFO B16-52
S-2000 B12-3 - B12-4
Setscrew Ball Bearings B4-2 - B4-3
Setscrew VSC Ball Bearings B8-1 -
Sleeve Bearings B17-2 - B17-3
SLEEVOIL B14-3 - B14-5
Specialty Tapered
Type C B11-2
Special Duty Hinged Cap B11-3
All Steel B11-4
Take-Up Frames B19-2 - B19-5
Type E, Type K, DOUBLE-INTERLOCK and TAF B10-3 - B10-7
Unified B15-3 - B15-7
Unisphere B9-3
ULTRA KLEEN B1-3 - B1-5
Flingers B11-3
Flywheel Formulas B16-34
Formulas & Constants B16-34

G

GRIP TIGHT B5-1 - B5-104

H

Hardness Comparison B16-38
HD Protected Screw Take-Up Frames B15-29 - B15-31
High Temperature
Inch B8-6
Metric B9-13
How To Order
D-LOK Ball Bearings B5-4
Eccentric Collar Ball Bearings B7-4
E-Z KLEEN B2-4
GRIP-TIGHT B2-4
IMPERIAL - IP, ISAF and ISN B14-7
International Bearings B12-4
S-2000 B12-6
Setscrew Ball Bearings B4-4
Sleeve Bearings B17-4
SLEEVOIL B14-6
Specialty Tapered
Type C B7-6
Special Duty Hinged Cap B7-23
All Steel B7-49
Take-Up Frames B19-6
Type E, Type K, DOUBLE-INTERLOCK and TAF B10-9
ULTRA KLEEN B1-6
Unified B155-9
Unisphere B13-5

I

IMPERIAL - IP, ISAF AND ISN B10-1 - B10-78
INTERNATIONAL BEARINGS B12-1 - B12-26
Installation
E Family Bearings B6-13, B6-68
Specialty Tapered
Special Duty B11-27
All Steel B11-53

L

Load Ratings, SLEEVOIL B14-11
Lubrication
D-LOK Ball Bearings B5-5
E Family Bearings B6-13, B6-68
Eccentric Collar Ball Bearings B7-5
GRIP-TIGHT B2-5
IMPERIAL - IP, ISAF and ISN B14-14
Setscrew Ball Bearings B3-5
Specialty Tapered B11-27
Unified B11-24 - B11-25
Unisphere B13-8

M

Maintenance
E Family Bearings B6-13
Specialty Tapered B11-27, B11-53
Material Characteristics B16-13
Mathematical Equations B16-35
Metric Standard Measurement & Conversions B16-26
Misalignment
D-LOK Ball Bearings B5-5
Eccentric Collar Ball Bearings B7-3, B7-5
GRIP-TIGHT B2-5
Setscrew Ball Bearings B3-3, B3-5

Static B8-3, B8-11, B9-8
Unitized B8-11, B8-15, B9-8
Misalignment, Dynamic B8-3
Modifications/Accessories
D-LOK Ball Bearings B5-66
Eccentric Collar Ball Bearings B7-84
Setscrew Ball Bearings B3-132
SLEEVOIL B14-30- B14-38
Mono Blocks and Plummer Blocks B16-1 - B16-63

N

Narrow Slot Take-Up Frame B15-8 - B15-10
Nomenclature
D-LOK Ball Bearings B5-4
Eccentric Collar Ball Bearings B7-5
GRIP-TIGHT B5-4
IMPERIAL - IP, ISAF and ISN
IMPERIAL IP B14-9
ISAF B14-11
International Bearings B12-4
S-2000 B12-7
Setscrew Ball Bearings B3-4
Sleeve Bearings B17-5
SLEEVOIL B14-7 - B14-8
Specialty Tapered
Type C B11-7
Special Duty Hinged Cap B11-24
All Steel B11-50
Take-Up Frames B19-7
Type E, Type K, DOUBLE-INTERLOCK and TAF B10-10
Unified B15-10
Unisphere B13-5

O

Oil Level & Filtration System, SLEEVOIL B14-38
Oil Ring, SLEEVOIL B14-33
Oil Viscosity Classification B16-23
Overhung Load, Engineering B16-35

P

PROGUARD PLUS Seal D-LOK Ball Bearings B5-2, B5-3, B5-66
PROGUARD Seal B4-3
Properties on Sections B16-37

R

Radial Loads, Metric B9-5 - B9-7
Related Products
Ball Bearings End Covers
D-LOK B5-67, B5-74
Eccentric Collar B4-84
GRIP-TIGHT B2-96, B2-104
Setscrew Ball Bearings, End Cover B3-136, B3-137
Setscrew Ball Bearings B4-102

S

S-2000 B8-1 - B8-56
Seals
D-LOK Ball Bearings B5-66
Eccentric Collar Ball Bearings B7-4, B7-84
Setscrew Ball Bearings B3-4, B3-117, B3-132
Selection
D-LOK Ball Bearings B5-5, B5-7
Eccentric Collar Ball Bearings B7-4, B7-84
Extreme Duty B3-6 - B3-7
E-Z KLEEN B2-5 - B2-13
GRIP-TIGHT B5-4
IMPERIAL - IP, ISAF and ISN B14-12 - B14-19
International Bearings B12-5 - B12-14
Mono Blocks and Plummer Blocks
ISN Easy Selection B16-9
ISN Plummer Blocks With Trident Seals B16-15
ISN Plummer Blocks Dimensions B16-16
ISNX Hydraulic B16-22
S-2000 B12-9
Setscrew Ball Bearings B4-5 - B4-9
Sleeve Bearings B17-6 - B17-12
SLEEVOIL B14-9 - B14-15
Specialty Tapered
Type C B11-8
Special Duty Hinged Cap B11-25
All Steel B11-51
Type E, Type K, DOUBLE-INTERLOCK and TAF B10-11 - B20-20
Unified B11-16 - B11-25
Selection Dimensions
Extreme Duty B3-8 - B3-40
E-Z KLEEN B2-22 - B2-74
GRIP TIGHT B5-8 - B5-58

KEYWORD INDEX

- Mono Blocks and Plummer Blocks - PDNF and BLO — B16-4 - B16-5
- Setscrew — B4-10 - B4-89
- Sleeve Bearings — B17-16 - B17-64
- ULTRA KLEEN — B1-14 - B1-32
- Unisphere — B9-6 - B9-15

SETSCREW BALL BEARINGS — B4-1 - B4-144
Shaft Keyseats — B16-18
Shafting / Shaft Diameters — B16-15
SLEEVE BEARINGS — B17-1 - B17-56
SLEEVOIL — B14-1 - B14-38
SPECIALTY TAPERED PRODUCTS — B11-1 - B11-60
Specifications

- IMPERIAL - IP, ISAF and ISN — B14-6
- S-2000 — B12-5
- SLEEVE Bearings — B17-4
- SLEEVOIL — B14-6
- Special Tapered
  - Type C — B11-5
  - Special Duty Hinged Cap — B11-22
  - All Steel — B11-48
- Type E, Type K, DOUBLE-INTERLOCK and TAF — B10-8
- Unified — B15-8
- Unisphere — B13-4

Springlok — B9-3
Strength & Physical Properties of Metals — B16-36

T

TAKE-UP FRAMES — B19-1 - B19-44

- Baseplates — B19-40 - B19-43
- Top Angle — B19-14 - B19-18
- Stainless Steel Screws — B19-6 - B19-7

Torque & Horsepower Equivalents — B16-30
TPHU Take-Up Frames — B15-17 - B15-20
Trigonometric Formula — B16-38
TYPE E, TYPE K, DOUBLE-INTERLOCK & TAF — B10-1 - B10-74

U

U.S. Standard Sheet Metal Gages — B16-27
UNIFIED — B15-1 - B15-134
UNISPHERE — B13-1 - B13-25

V

V-Belt Sheave Groove Dimensions — B16-11
Vibration Detector Adapter Kit, SLEEVOIL — B14-33
Vibration Frequencies — B16-2

W

Weights/Properties of Steel Shafting — B16-21
Wide Slot Take-Up Frames — B15-11 - B15-13